The Virtual Laboratory
Max-Planck-Institute for the History of Science, Berlin ISSN 1866-4784 -
http://vlp.mpiwg-berlin.mpg.de/

Anonymous. n. d. Cambridge Instrument Company, Inc.: Cambridge Physical Instruments. New York (Collection Rand B. Evans)

Pages 1- (scan numbers)

https://vlp.mpiwg-berlin.mpg.de/references?id=lit13688

List No. 100

CAMBRIDGE PHYSICAL INSTRUMENTS.

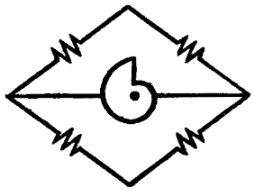

PRINTED IN ENGLAND.

List No. 100.

CAMBRIDGE PHYSICAL INSTRUMENTS

CONTENTS

	Page
Introduction	2
Callendar's Mechanical Equivalent of Heat Apparatus	3
Measuring Microscope	4
Small Comparator	5
Cathetometer	5
Time Marking Apparatus	6
Cambridge Extensometers	11
Ewing Extensometers	12
Repeated Impact Testing Machine	14
Manometers	16
Pitot Tubes	17
Moll Thermopiles	18
Bolometer	20
Surface Tension Apparatus	21
Ray-Track Apparatus	22

CAMBRIDGE INSTRUMENT COMPANY, INC.

Sales Office and Show Room :

3512, GRAND CENTRAL TERMINAL, NEW YORK CITY.

Works :

OSSINING-ON-HUDSON, NEW YORK.

INTRODUCTION

THE measurement and demonstration of physical phenomena is not only of interest to the scientist and the research worker, but occupies an important place in the curriculum of modern schools and colleges. Physical tests of materials, and the accurate determination of small pressure differences, temperatures, etc., are also becoming of increasing importance in connection with industrial processes, and research laboratories now form an essential part of almost every modern works organisation.

In order to obtain the maximum educative value from the work carried out in school laboratories, it is important to ensure that they are adequately equipped with apparatus designed upon scientific principles and of sufficiently robust construction to give accurate results in the hands of the average student. Instruments for industrial testing and research work must also be of sound construction, and so designed as to enable results of high precision to be obtained with the minimum expenditure of time and trouble.

The instruments described in the following pages have been designed with a view to supplying the needs of engineering and science laboratories in Schools, Technical Colleges and Universities, and of physical research and routine testing laboratories in various industries. Only those instruments have been included which are in more general use, but we have for many years made a feature of the design and construction of apparatus for special requirements, and are at all times glad to place our wide experience at the disposal of those who require instruments of a special nature for the furtherance of scientific and industrial research.

The present catalogue does not include the complete range of apparatus which we manufacture for laboratory use. For example, accurate and sensitive galvanometers are an essential part of the equipment of every educational and industrial laboratory. The wide and varied applications of such instruments have led to the development of a large number of different types, the construction and uses of which are fully described in our List No. 167. The same list also includes details of a number of recording cameras designed to facilitate the production of photographic records of rapidly varying phenomena. Information regarding other electrical measuring instruments, instruments for physiological and medical investigations, and instruments for the measurement of temperatures from -200°C. to $+4{,}000$°C., is contained in a series of other catalogues, any of which will be gladly sent on application.

In connection with the portable chronograph described on page 9, reference is made to the stylus-on-celluloid method of recording, which enables high accuracy to be combined with the advantages of extreme portability and convenience in use. Further information regarding this method of recording is given in our Lists Nos. 147, 149, 153 and 159, describing Vibrographs, Accelerometers, Micro-Indicators for high speed engines, and Stress Recorders respectively.

CALLENDAR'S MECHANICAL EQUIVALENT OF HEAT APPARATUS

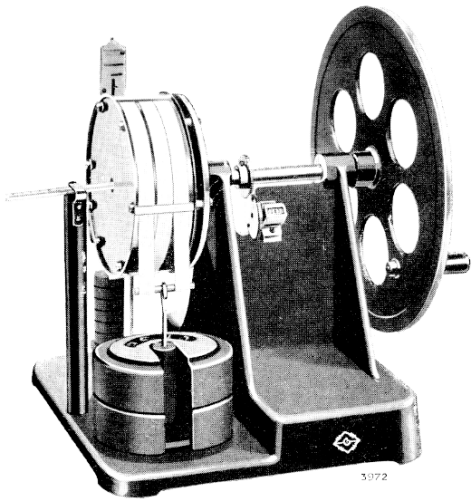

Fig. 1.
35 × 31 × 35 cm.

THIS apparatus was originally designed by Prof. H. L. Callendar to provide a convenient means of determining "J," the Mechanical Equivalent of Heat. It has been recently modified to provide a more compact and more convenient form of apparatus. The latest pattern, illustrated in Fig. 1, is little more than half the height of the earlier model, and possesses increased stability, while the provision of a right-hand driving wheel facilitates its operation. The instrument is simple in construction and gives accurate results (within 0·5 per cent.) with considerable rapidity, a complete experiment occupying only about ten minutes. Mechanical energy is dissipated by means of friction. A silk belt, weighted unequally at either end, is arranged to form $1\frac{1}{2}$ complete turns around a rotating brass drum or calorimeter, containing water, and the heat energy developed by the friction between the silk belt and the surface of the drum is measured by the rise in temperature of the water. The drum is rotated either by hand or by a small motor ($\frac{1}{10}$ h.p.), the number of revolutions being automatically recorded by a counter, which is so positioned that it may be easily read by the operator. The unequal weights at the two ends of the belt are automatically maintained in a position of floating equilibrium by a light spring balance which acts in direct opposition to the lighter weight. The flexibility of the belt ensures that, to a very close approximation, the difference of load at the two ends is a true measure of the friction. The friction is practically independent of the speed of rotation, and there are no pulley or bearing errors. The motion of the surface of the calorimeter reduces the effect of draughts and convection currents. The rise in temperature of the water is observed by means of a mercury thermometer inserted through an axial opening in the calorimeter, the bulb of the thermometer being bent round so that it is fully immersed. Normally, a thermometer range 10° to 30° C. is supplied, but when the apparatus is used in hot climates, a thermometer range 25° to 45° C. can be provided. The standard motor is arranged for 110 volts D.C., but by means of a suitable resistance the motor can be run from a 220-volt direct current supply. Motors suitable for other voltages can be supplied to order.

Cat. No.	Fig. No.	
33111	**1**	**Callendar "J" Apparatus, without motor.**
33112		**Callendar "J" Apparatus, with motor for 110 volts D.C.**

MEASURING MICROSCOPE

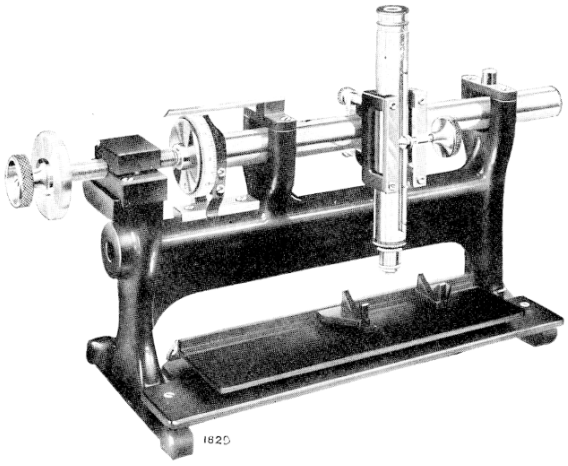

Fig. 2.
43 × 15 × 25 cm.

THE Measuring Microscope shown in Fig. 2 is an instrument for the accurate measurement of lengths up to 40 millimetres, and gives readings directly to 0·01 millimetre, or, by estimation, to 0·001 millimetre. It is designed throughout upon geometric principles, and combines the precision of a scientific instrument with the simplicity and robustness of a workshop tool. The instrument consists of a microscope clamped to a tube, which is supported in a rigid frame, and can be traversed by a screw and milled head through a distance of 40 millimetres. The microscope, which can be clamped in position at any point along the tube, and at any angle in a plane normal to the tube, is fitted with an achromatic objective and suitable eyepiece with cross lines. It is provided with a slow motion focussing mechanism, which gives a smooth movement, and is entirely free from backlash. The object under examination can be supported upon a small sliding table, which rests on geometric fittings, and is provided with aligning adjustments controlled by screws. Small V blocks, on geometric supports fitting this table, are provided to take screws, cylinders, etc. A rotating table can also be supplied to enable measurements to be made in polar co-ordinates. When it is desired to use the Microscope for measuring vertical distances, the instrument can be provided with a tripod base with levelling screws, so that the microscope may be traversed vertically.

The Microscope is capable of many applications in the laboratory and the workshop; it may be employed, for example, to determine the diameter of the indentations made in the Brinell hardness test, and the change in length of specimens of steel after hardening; to measure test pieces after mechanical strain in order to determine elastic limits and yield points; to measure the pitch of small screws, and the variations in pitch from one part of the thread to another. It can also be used to advantage for accurate length measurements difficult to obtain by other methods. The addition of a goniometer eyepiece to the microscope in place of the ordinary eyepiece enables the instrument to be used also for determining the angle of V threads. For this purpose the microscope is set so that one of the cross lines coincides with one side of the V (see Fig. 3), and a reading is taken on the divided circle of the goniometer eyepiece. The eyepiece is then rotated until the cross line coincides with the other side of the V. The angle through which the eyepiece has been rotated, as shown by the difference between the two readings on the divided circle, gives directly the angle of the V to within 5 minutes of arc.

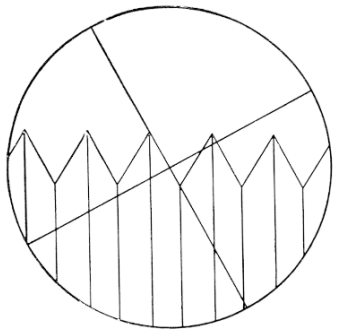

Fig. 3.

Cat. No.	Fig. No.	
31137	**2**	**Measuring Microscope.**
31139		**Tripod for above.**

SMALL COMPARATOR

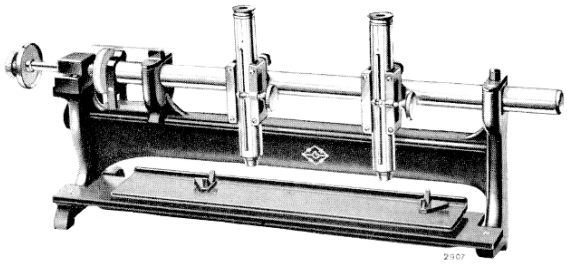

Fig. 4.
70 × 15 × 28 cm.

THE Comparator shown in Fig. 4 has been designed for the rapid and accurate comparison of intervals from 50 millimetres to 400 millimetres on a scale against the same length on a standard scale. It also forms a convenient and accurate measuring microscope for lengths from zero to 400 millimetres. The instrument is of similar construction to the measuring microscope described on page 4, but is provided with two microscopes mounted on a tube about 500 millimetres long. The microscopes can be traversed together by a screw and milled head through a distance of 40 millimetres, while they may be clamped independently at any positions along the tube. The scale under observation is supported on the base of the instrument. The addition to one of the microscopes of a filar micrometer eyepiece, enabling the length between the microscopes to be adjusted initially to any exact standard, simplifies the use of the instrument, but is not essential. By substituting telescopes for the microscopes, the instrument can be converted into a telescopic comparator, for taking readings at a distance. An interesting application of this instrument is its use in determining the expansion of firebricks for muffle furnaces.

A similar instrument can be supplied for the accurate comparison of intervals from 50 millimetres to 1 metre. Larger Comparators have also been made for comparing the lengths of standard bars up to 4 metres, and for standardising 24-metre and 50-metre surveying tapes against 4-metre standards.

Cat. No.	Fig. No.	
31134	**4**	**Small Comparator.**
31135		**Ditto, with filar micrometer eyepiece.**

CATHETOMETER

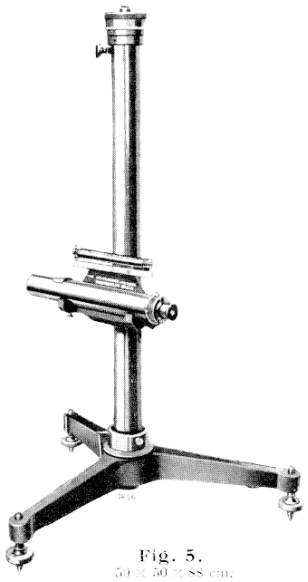

Fig. 5.
50 × 50 × 88 cm.

THE Cathetometer illustrated in Fig. 5 is used in conjunction with a standard scale. The whole pillar of the instrument can turn about its axis, and can be raised or lowered micrometrically through a vertical range of 25 millimetres, the reading of the micrometer head being used to subdivide the scale readings to 0·01 millimetre. By estimation, readings may be obtained to 0·001 millimetre. The telescope is carried in a cradle, which can be clamped in any desired position on the pillar, and has a vertical travel of 50 centimetres. A spirit level is attached to the telescope cradle, and levelling screws are provided in the tripod foot of the instrument. This Cathetometer will be found a useful instrument in a laboratory for reading thermometers at a distance and for general experimental work. If desired, the telescope can be replaced by a microscope, as fitted to the measuring microscope (Fig. 2), enabling the instrument to be used, for example, to measure the height of liquids in capillary tubes. Cathetometers have also been made for special applications, including an instrument for the comparison of standard barometers at the National Physical Laboratory. Particulars of these instruments will be forwarded on request.

Cat. No.	Fig. No.	
31131	**5**	**Cathetometer.**

TIME MARKING APPARATUS

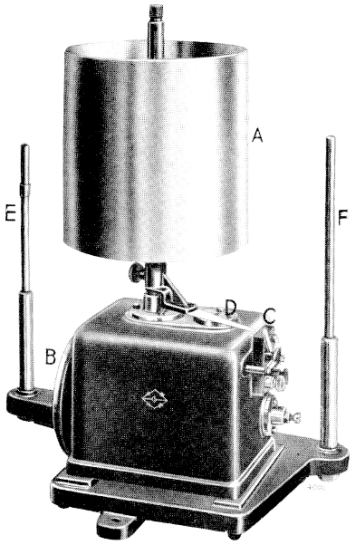

Fig. 6.
36 × 23 × 43 cm.

Recording Drum. In Fig. 6 is illustrated a Recording Drum of the type which was originally developed by the late Dr. Keith Lucas for use in the Physiological Laboratory of the University of Cambridge. It comprises an aluminium drum *A*, which is mounted on a vertical shaft, and is rotated by means of a belt-driven pulley *B* through the intermediary of an easily operated two-speed gear giving speeds in the ratio 1 : 80. The arrangement of the gearing is shown diagrammatically in Fig. 7. Two worms, fixed to the shaft of the cone pulley *B*, drive two worm wheels, W_1 and W_2 respectively. The worm wheel W_1 is directly connected to a sleeve S_1, which rotates freely on the vertical drum shaft, while the other worm wheel W_2 drives a similar sleeve S_2 through the intermediary of spur gearing *G*. The two sleeves are arranged one on either side of a friction clutch *Q*, also mounted on the drum shaft. The drum spindle is tubular, and encloses a rod which is screwed into a plug keyed to the shaft and to the clutch *Q*. By rotating the knurled head *U* at the upper extremity of the rod, the upper or lower face of the clutch is brought into frictional contact with either the sleeve S_1 or the sleeve S_2, thus driving the drum at the corresponding speed. This form of clutch has proved both simple and reliable in operation ; it enables the speed of the drum to be changed instantly, without need for dismantling any part of the instrument, while it is practically impossible for it to be damaged by inexperienced students. The gearing is entirely enclosed within a substantial metal case. A trip switch *C* (see Fig. 6) which is operated by a steel trigger *D* clamped to the drum shaft, can be used to interrupt the current in one of the recording circuits at one point in the revolution. The drum is mounted on a cast-iron base, and two upright pillars *E*, *F* are provided to carry muscle troughs, recording levers, time markers, etc. The apparatus is intended for use with smoked paper charts 52 centimetres long by 13 centimetres wide.

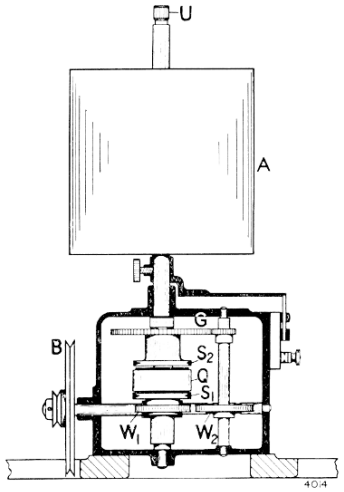

Fig. 7.

The driving pulley *B*, as is shown in Fig. 7, has two steps of ratio 5 : 1, the larger pulley having a diameter of 110 millimetres. For large installations it is frequently convenient to drive the drums from shafting, but for single drums or small installations, it is generally found preferable to employ an individual drive from an electric motor through the speed reducing gear described on page 7. The cone pulleys on the drum and on the speed reducing gear may be interchanged to give a variety of speeds, the range covered being from 0·15 to 440 millimetres per second, with a motor speed of 2,400 revolutions per minute, and a pulley of 22 millimetres diameter.

A modified form of Recording Drum is also made, having a traversing mechanism which enables the pen to trace out a spiral line on the drum, thus giving a longer record than is possible with a single revolution of the drum.

TIME MARKING APPARATUS

Continued

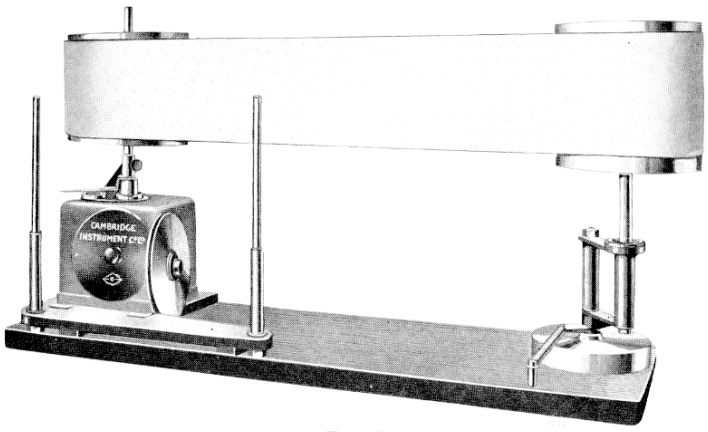

Fig. 8.
99 × 43 × 45 cm.

Kymograph. For work where a longer record is desirable than can be obtained on a single drum, the instrument illustrated in Fig. 6 can be converted into a Kymograph, enabling a loop of paper 195 centimetres in length to be employed. This apparatus, which is illustrated in Fig. 8, comprises a standard recording drum of the type described on page 6, mounted together with a second drum on a single wooden base, as shown. The second drum is not fitted with the driving mechanism, but is simply mounted upon a vertical spindle which in turn is carried upon a hinged frame fitted with a spring device that keeps the paper chart taut.

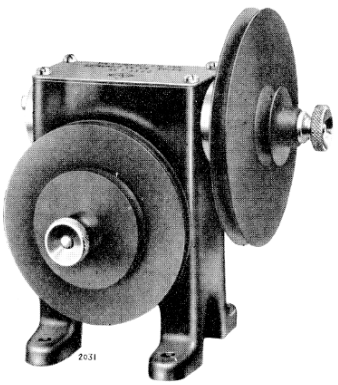

Fig. 9.
12 × 10 × 12 cm.

Speed Reducing Gear. The Speed Reducing Gear illustrated in Fig. 9 has been designed for use in connection with the Recording Drum illustrated in Fig. 6, when the apparatus is driven from an electric motor. It is also used with the Laboratory Chronograph described on page 8, and forms a convenient accessory for use with other apparatus, particularly where an electric motor drive is used. The driving belt from the motor passes over a cone pulley, which drives a second cone pulley through the intermediary of worm and spur gearing giving a speed reduction in the ratio of 20 : 1. The two cone pulleys are interchangeable, the pulley diameters on one being in the ratio 2 : 1 and on the other 4 : 1, so that by using different arrangements of the pulleys a variety of speeds can be obtained. The gearing is enclosed within a metal case, partly filled with oil, the gears being kept lubricated by means of a brush dipping into the oil and pressing against the worm.

Cat. No.	Fig. No.	
31661	**6**	**Recording Drum.**
31666	**8**	**Kymograph.**
29911	**9**	**Speed Reducing Gear.**

TIME MARKING APPARATUS

Continued

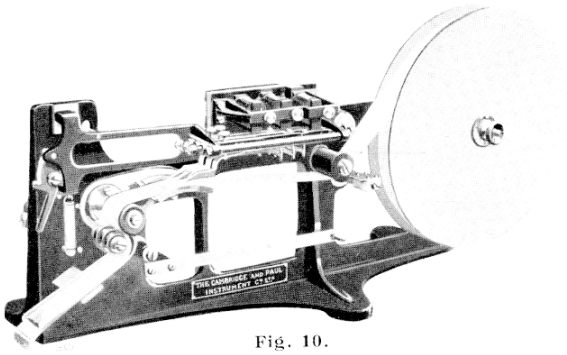

Fig. 10.
53 × 18 × 25 cm.

Laboratory Chronograph. The Chronograph illustrated in Fig. 10 may be used to obtain records of the occurrence of any events which can be arranged to cause the making or breaking of an electric circuit. Time signals can be recorded at the rate of 50 per second, and read easily to an accuracy of 0·01 second, or, with care, to 0·001 second. With accessories, the instrument provides a means of taking recalescence curves. A band of paper, 25 millimetres wide, is drawn under three pens attached to the armatures of three electro-magnets; one pen may be connected to a time-marking instrument, while the other two pens record the phenomena under observation, or one pen may be used to mark fiftieths of a second, one to mark seconds, and one to record phenomena. The paper is driven at a normal speed of 25 mm. per second through a roller clutch by a belt from a small electric motor, or at slower speeds through the speed reducing gear described on page 7; alternatively, the Chronograph may be driven from a spring motor. The clutch enables the paper to be set in motion or stopped while the motor is running. Provision is made for quickly aligning the pens individually, raising them simultaneously from or lowering them on to the paper, and adjusting the pressure of each pen on the paper. The paper is supplied in reels of approximately 167 metres.

When signals occur only at comparatively long intervals, the driving motor may be shunted through a key so that normally the paper runs slowly, but when a signal is expected its speed can be increased by cutting out the shunts. When the highest accuracy is required, the pens can be arranged to respond to signal currents lasting only about 0·002 second. A six-pen Chronograph of similar design is also made, giving six records on a strip of paper 55 millimetres in width.

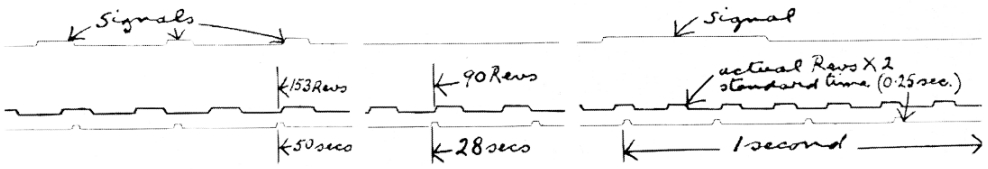

Fig. 11.

Fig. 11 is a three-pen record obtained by Mr. Perry A. Borden at the Hydro-Electric Power Commission Laboratories, Toronto, showing the variation in speed on a retardation test made to determine the core loss plus windage and friction of a turbine generator, with the turbine uncoupled. The unit made 90 revolutions in 28 seconds and 153 revolutions in 50 seconds, showing that a retardation of 4·8 per cent. took place during the interval of 22 seconds.

Cat. No.	Fig. No.	
31641	**10**	**Laboratory Chronograph, 3-pen pattern.**
31644		**Ditto, 6-pen pattern.**

TIME MARKING APPARATUS

Continued

Portable Chronograph. The Chronograph illustrated in Fig. 12 is designed to give records of time intervals readable to an accuracy of 0·002 second. It is particularly suitable for use where extreme accuracy combined with robustness and portability is required, and has been employed in connection with the International Longitude Project Survey of India under the Geodetic Branch of the India Office. The instrument utilises a novel method of recording, which does not depend upon optical or photographic methods, and yet is capable of great accuracy. The records are obtained by the action of a moving stylus upon transparent celluloid film. The pressure of the stylus is extremely light and the celluloid flows plastically under the rounded point of the stylus, the line produced having such optical characteristics as to render any point on an enlarged image of the diagram readable to a high order of accuracy. Periodic phenomena of relatively high frequency are recorded accurately and practically undisturbed by instrumental inertia effects.

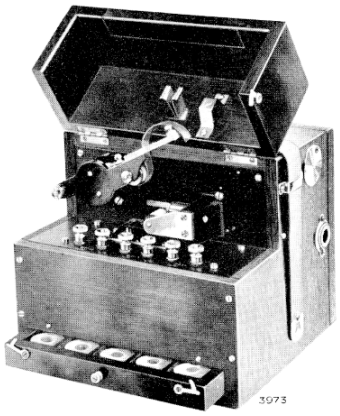

Fig. 12.
23 × 21 × 20 cm. 9·1 kg.

In the instrument, a strip of transparent celluloid is caused to move under three styles operated by electro-magnets. One of the styles is connected to the signals to be recorded, while the other two styles may be connected to suitable time-marking mechanisms. One style operates on the back of the film, and the others operate side by side on the front, the three records being brought so close together as to render them simultaneously visible in the field of view of a microscope (see Fig. 13).

The celluloid film is driven at a constant speed of 4 millimetres per second by clockwork mechanism, which is capable of running continuously for 30 minutes with a single winding. The film is 11·5 millimetres wide and about 460 centimetres long; spare films are carried in a drawer fitted in the case. The complete mechanism is enclosed within a compact case, fitted with a lid which gives access to the mechanism for renewing the film and adjusting.

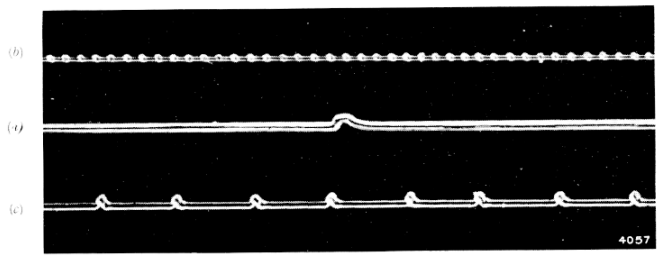

Fig. 13.

The records made by the instrument are of small dimensions, and are permanent. They can be examined at once by means of a microscope, or direct enlargements can be obtained by photographic methods, by a camera lucida, or by projection upon a screen. A light and portable microscope has been designed for use with the instrument, having an eyepiece with a flat field of about 6·5 millimetres diameter and fitted with parallel movable reading lines which facilitate measurement of the records. A photographic enlargement (30×) of a typical record is reproduced in Fig. 13. The central line (*a*) shows the signal from the phenomena investigated, while the lines (*b*) and (*c*) show time intervals of fiftieths and tenths of a second respectively.

Cat. No.	Fig. No.	
31646	**12**	**Portable Chronograph.**
34993		**Microscope.**

TIME MARKING APPARATUS

Continued

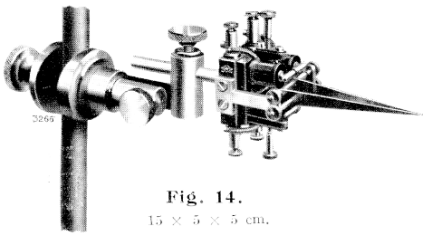

Fig. 14.
15 × 5 × 5 cm.

Deprez Signal Time Markers. This Time Marker (Fig. 14) is designed for inscribing time scales on smoked paper charts (see pages 6 and 7). It comprises a small electro-magnet, the current through which is made and broken at each vibration of a tuning fork. To the armature of the electro-magnet is attached a style which can be set (by means of a fine adjustment) into contact with the recording surface, thus causing marks to appear on the record at definite time intervals. The current required is less than 0·2 ampere. A clamp is provided to facilitate attachment to a stand. The Time Marker is generally employed with a tuning fork giving 50 periods per second, but it may be adjusted for use with a fork of 100 p.p.s. The instrument shown in Fig. 14 is provided with two electro-magnets and two recording styles, enabling two time markings to be simultaneously recorded.

Cat. No.	Fig. No.	
31621		**Deprez Time Marker.**
31622	**14**	**Ditto, giving two records.**

Rotary Time Markers. The Time Marker illustrated in Fig. 15 enables time intervals to be marked on records made by the projection of a beam of light on to a moving photographic plate, paper or film, and is largely employed with electro-cardiographic apparatus (see List No. 180). It consists of a small electric motor which runs synchronously with an electrically-maintained tuning fork. The motor carries a disc having projections evenly spaced round its periphery, which intercept the beam of light falling on the photographic plate, causing lines to appear on the record at distances apart which represent definite intervals of time. Discs having different numbers of spokes can be supplied, giving time markings of different periods. One projection on each disc is usually made wider than the others, thus recording more prominently each complete rotation of the disc. If a disc having five projections, with one of double width, is used in conjunction with a tuning fork giving 50 periods per second, twenty-fifths and fifths of a second are recorded. A phonic wheel of similar design forms an accurate means of marking seconds.

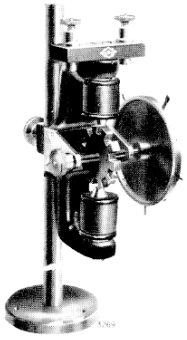

Fig. 15.
15 × 8 × 12 cm.

Cat. No.	Fig. No.	
31672	**15**	**Rotary Time Marker.**

Tuning Forks and Stands. In Fig. 16 is illustrated an electrically-maintained Tuning Fork for use in stroboscopic investigations and in other applications where time signals of high frequency are required. It is frequently used with the chronographs described on pages 8 and 9. The Tuning Fork is mounted on a stand fitted with a movable electro-magnet and a mercury cup contact breaker, a condenser being connected across the contact to reduce sparking. Standard Tuning Forks have nominal frequencies of 50, 100 or 200 periods per second; forks of other frequencies can be supplied to order. At reasonable amplitudes with a well-balanced Fork, the rate of vibration is almost independent of the driving current and of the position of the electro-magnet. The small driving current required is usually supplied from a two-volt battery. When it is desired to take extremely accurate measurements under varying temperature conditions, or when time signals of still higher frequencies are required, Tuning Forks made of Elinvar metal can be supplied to order, having a frequency-temperature coefficient of about +0·000005 per 1°C., as compared with about −0·0001 for a steel fork. These Forks have been supplied for frequencies up to 5,000 periods per second. The Eccles Valve-Maintained Tuning Fork described in List No. 162 can also be used as a time marker.

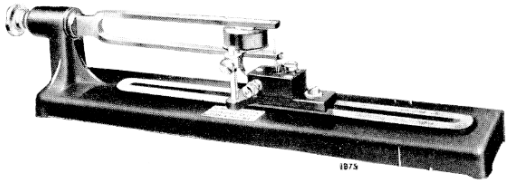

Fig. 16.
55 × 10 × 10 cm.

Cat. No.	Fig. No.	
31656	**16**	**Tuning Fork,** 200 periods per second.
31651	**16**	**Tuning Fork Stand.**

CAMBRIDGE EXTENSOMETERS

THE Cambridge Extensometer illustrated in Fig. 17 has been designed for the measurement of the elastic extension and modulus of elasticity of specimens of metal under tensile loads. It will be found particularly suitable for workshop use, no microscopes, mirrors or other delicate parts liable to derangement being used in its construction, while it gives direct readings of the extension of the specimen which are accurate to within 0·001 millimetre under ordinary conditions of test.

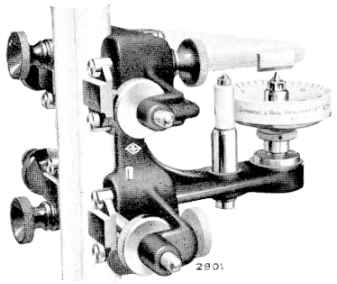

Fig. 17.
12 × 15 × 15 cm.

The instrument is made in two portions, each of which is separately attached to the test piece by hard steel conical points, which are driven gently into punch marks made in the specimen, and clamped in position, a centring gauge being provided to ensure that the two portions of the Extensometer are mounted in the correct position relative to one another and to the centre line of the specimen. The lower part of the Extensometer carries a micrometer screw fitted with a hardened steel point and a divided head. It also carries a vertical arm, at the top of which is fitted a hardened steel knife edge about which the two portions of the instrument are pivoted. From the upper portion extends a flexible nickel-plated steel tongue, which acts as a lever magnifying the extension of the specimen, so that the movement of the edge of the tongue towards or away from the point of the micrometer screw is five times the actual extension. In taking a reading with the Extensometer, the steel tongue is caused to vibrate and the micrometer head turned until the point of the screw just touches the hard steel knife edge on the tongue as it vibrates. This method of setting is extremely delicate, owing to the audible sound produced and the fact that the vibrations are quickly damped out immediately contact is made. Direct readings to within 0·001 millimetre are given on the micrometer head. Readings may be taken in this way before and after the load is applied, the difference in the readings giving directly the extension of the specimen under test.

When the test piece is of small diameter, the flexibility of the specimen may cause vibration of the instrument as well as the steel tongue, thus rendering it more difficult to obtain accurate results by the method described. In such cases, however, highly accurate readings may be taken by simply deflecting the spring with the finger and noting the contact as it passes the micrometer point. No damage can be done by advancing the micrometer screw too far forward.

The Extensometer is suitable for use with specimens up to 20 millimetres or 0·75 inch diameter, and is made in two patterns, for centre points 100 millimetres and 50 millimetres apart respectively. A complete revolution of the micrometer screw corresponds to an extension of 0·1 millimetre in the test piece, one division on the micrometer head being equal to 0·001 millimetre extension. The instrument can also be supplied to read in English units, one division on the micrometer head corresponding to an extension of 0·0001 inch. A slightly modified form of Extensometer for use with a horizontal test piece is also made. For marking off the test specimens, the marking-off tool described on page 13 may be used.

Cat. No.	Fig. No.	
23112	**17**	**Cambridge Extensometer.**

EWING EXTENSOMETERS

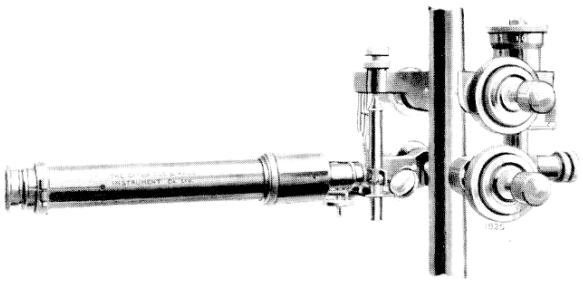

Fig. 18.
32 × 18 × 28 cm.

THE Extensometer illustrated in Fig. 18, the design of which is due to Sir J. A. Ewing, enables the variation in length of the specimen under test to be continuously watched. It is applicable to large or small test pieces and can be used on either vertical or horizontal testing machines, while it has the further advantage that no part has to be touched while the test is being made. The apparatus can be supplied to read in English or metric units, the standard test lengths being 8 inches, 200 millimetres, and 100 millimetres.

The principle of the Extensometer is shown diagrammatically in Fig. 19. The apparatus is clamped to the test piece A by two pairs of set screws attached to the clamping pieces B and C respectively, the points of the screws being accurately adjusted so that a definite length (8 inches, 200 millimetres or 100 millimetres) of the specimen is under observation. An upright rod B^1 projecting from the lower clamp B ends in a rounded point P which engages with a conical hole in the upper clamp C, thus forming a fulcrum about which the clamp C rotates when an extension of the test piece takes place. A point Q, equally distant from the test piece on the opposite side of the clamp C, moves relatively to B through a distance equal to twice the extension of the test piece. This movement is measured by means of a microscope fixed in line with the clamp B and focussed upon a mark on a rod R pivoted at Q. This mark is a fine line ruled on a glass plate set in an aperture in the rod and is illuminated by means of a small mirror. The microscope is focussed on the line and the displacement is read on a micrometer scale in the eye-piece, each division of which in the 8-inch instrument represents an extension of 0·0002 inch in the test piece. In the 200-millimetre instrument each scale division represents an extension of 0·005 millimetre, while in the 100-millimetre instrument the lever arms CP, CQ, are so proportioned as to magnify the extension four times, so that each division of the scale represents an extension of 0·0025 millimetre on the test piece. Readings can be taken to 0·00002 inch, 0·0005 millimetre and 0·00025 millimetre respectively. Lateral movement of the rod R is prevented by a guide fixed to the clip B. The conical socket for the fulcrum P is formed on the end of a micrometer screw L which can be adjusted to bring the mark on the rod R to a convenient point on the eye-piece scale of the microscope, and also enables the magnification of the microscope to be tested and, if necessary, adjusted before carrying out a series of tests, so that a complete revolution of the screw L causes a displacement of the mark through 50 divisions on the eye-piece scale. The screw L has a pitch of 0·02 inch in the English and 0·5 millimetre in the metric instruments. The eye-piece scale is graduated from 0 to 140; for the middle 120 divisions the readings are proportional to the actual movement of the test piece with an accuracy well within the limits of observational error. When making observations on the behaviour of a specimen after the elastic limit is passed, the

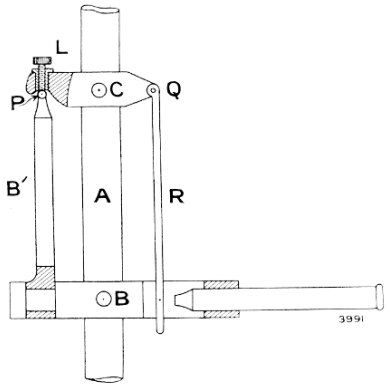

Fig. 19.

EWING EXTENSOMETERS

Continued

movement to be measured may be so large as to carry the sighting mark out of the field of view of the microscope. By rotating the screw *L*, however, the mark can be brought back on to the scale, 50 divisions being added to the scale reading for each complete revolution of the micrometer screw. For observations within the elastic limit, the eye-piece scale is of ample length. A clamping bar is provided with the Extensometer to facilitate the application of the apparatus to any specimen. This clamping bar, which is, of course, removed before the test commences, holds the clips *B* and *C* at the correct distance apart with the axes of their set screws parallel, while they are being clamped to the test piece. It is especially convenient for use when the strain has passed beyond the elastic limit and it is desired to reset the apparatus to the standard length on the test piece, the length of which has materially changed.

A modified form of Ewing Extensometer is made for measuring the elastic compression of short blocks having clip centres 2 inches apart. In this instrument the lever arms are arranged to magnify the movement five times, and the object sighted on is a small glass slide on which is engraved two fine horizontal lines 0·02 inch apart. The length of the microscope is adjusted to make 50 divisions on the eye-piece correspond to this division of 0·02 inch, and each scale division therefore represents a compression of the test piece of 0·00008 inch. By estimation, readings can be made to 0·000008 inch. The compression instrument is also supplied for metric readings with clip centres set 50 millimetres apart. With this instrument readings can be taken to 0·0002 millimetre compression of the test piece. Both compression forms may also be used for tension tests on lengths of 2 inches or 50 millimetres.

The 8-inch and 200-millimetre instruments can be supplied with extra fittings, by means of which they may be adapted for compression tests on specimens having lengths of 2 inches or 50 millimetres respectively.

MARKING-OFF TOOL

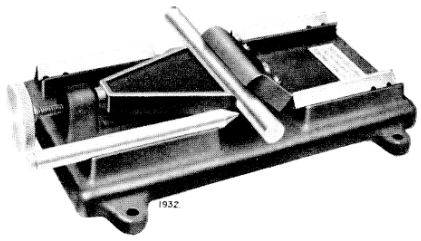

Fig. 20.
30 × 17 × 8 cm.

The apparatus shown in Fig. 20 is supplied for easily and accurately marking off on the test pieces the length to which the Extensometer is to be applied. It consists of a cast-iron base having two parallel V grooves, separated by the same distance as the centre points of the Extensometer. In a gap in the middle of these grooves, and set at right angles to them, is a third groove in which the test piece is held by a rigid geometric clamp. A hardened steel centre punch is placed in turn in each of the parallel grooves, on either side of the test piece, and a light tap with a hammer in each of the four positions accurately marks the length required on the specimen for the test. It also marks the test piece at opposite ends of a diameter on a normal section, and so facilitates the accurate mounting of the Extensometer. The apparatus can be supplied for any of the Extensometers mentioned in this List.

Cat. No.	Fig. No.	
23121		**Ewing Extensometer, for one length of test-piece.**
23123	**18**	**Ditto, convertible for two lengths of test-piece.**
23127		**Ewing Compressometer.**
23191	**20**	**Marking-off Tool.**

REPEATED IMPACT TESTING MACHINE

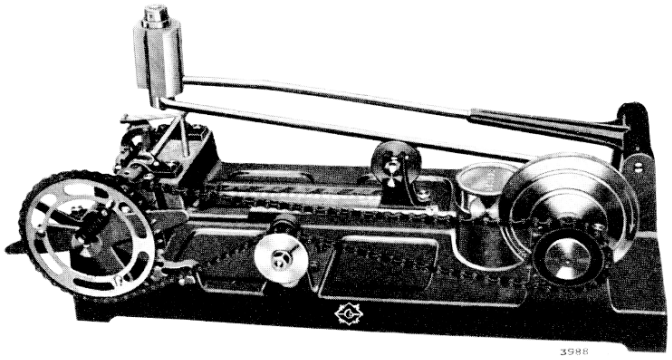

Fig. 21.
67 × 40 × 32 cm.

THE development of motor and aerial transport and of high-speed machinery subject to variable or rapidly alternating stresses, has rendered essential the application of suitable tests to the materials of construction, in order to ensure their ability to withstand the severe conditions of use. It is well known that metals are liable to fail under smaller loads when subjected to varying conditions than when under steady and continuous stress, and constructional engineers have long realised that tensile tests give incomplete information regarding the fatigue-resisting qualities of metals. The most valuable form of test is one in which the metal is subjected to a continuous series of blows of relatively small force delivered alternately on opposite sides of the test piece. Such a test most nearly reproduces the conditions of actual use, and therefore gives more reliable information than can be obtained by other methods, particularly those depending upon a single blow.

The Repeated Impact Testing Machine illustrated in Fig. 21 provides a means whereby these tests can be accurately and conveniently carried out. It is a modified and improved form of the impact testing machine originally designed by Dr. T. E. Stanton, of the National Physical Laboratory (see *Proc. Inst. Mech. Eng.*, 1908, iv., 889; also *Collected Researches of Nat. Phys. Lab.*, 1908, iii., 3). It subjects the specimen under test to stress reversals which are easily adjusted both in the energy and frequency of the blows. The apparatus requires no attention beyond occasional oiling, and stops automatically as soon as the specimen breaks.

The action of the machine is shown diagrammatically in Fig. 22. A three-speed cone pulley A is driven by a belt from a line shaft or a small electric motor ($\frac{1}{10}$ h.p.). A crank B, carried on one end of the pulley spindle, is connected to the lifting rod C, which is supported on a roller D, at some point in its length, so that the circular motion imparted to the rod at the crank end causes it to rock and slide on the roller. The free end of the lifting rod, which traces an oval path when the apparatus is in action, is bent horizontally at right angles, so that it engages with and lifts the hammer head E on the upstroke. When it has reached the top of its path, the lifting rod C moves forward until it is clear of the hammer head, which then falls freely on to the specimen H under test. This cycle is repeated from 70 to 100 times per minute. The height through which the hammer falls can be varied up to a maximum of 3·5 inches (90 millimetres) by adjusting the position of the roller D along a scale M, which is calibrated to read directly the vertical drop of the hammer head. The weight of the hammer head is about 4·5 lbs. (2 kgs.). The specimen H is supported on knife edges, cut slightly hollow and spaced $4\frac{1}{2}$ inches (114 millimetres) apart, one end of the specimen being kept

REPEATED IMPACT TESTING MACHINE

Continued

in place by a finger spring, while the other end is held in a chuck, the connection being hinged in such a way that the chuck is not subjected to any portion of the shock due to the hammer blow, all of which is taken on the knife edges. The specimen is usually about 0·5 inch (12 millimetres) in diameter, with a groove of known diameter and fixed shape at its centre to ensure fracture at that point. It remains stationary while the blow is struck, but between the blows is rotated through an angle of 180° by the mechanism shown in Fig. 23. In this mechanism the wheel *J*, which rotates uniformly on a chain drive making one complete revolution for every two blows of the hammer, is connected through a spring *S* to the chuck holding the specimen. While the hammer is making a stroke this spring is being strained, the rotation of the specimen being prevented by the lever *L*, held in contact with the stop *T*. After the blow is struck the arm *O*, which travels round with the wheel, releases the stop by one of the pins *P*, which engages with the projection *R*.

When fracture occurs, the specimen falls away and the hammer head falls to rest on a steel stop pin, tripping an electric switch on its way. This switch can be connected in the driving motor circuit so that the motor will be stopped immediately the specimen is broken. A revolution counter, fixed to the base of the machine, registers the number of blows made by the hammer head before fracture of the specimen takes place.

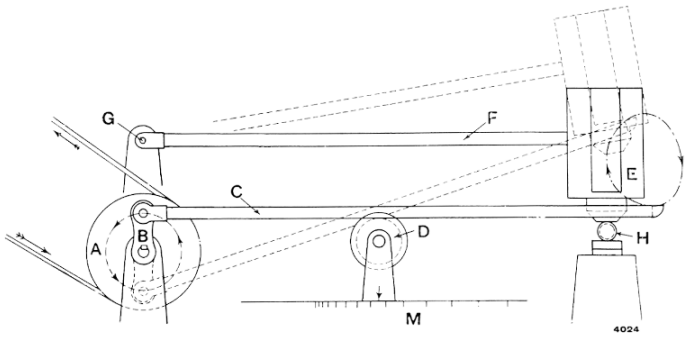

Fig. 22.

In making a test, it is usually advisable to adjust the machine to give about 80 blows a minute. If the speed is too fast, oscillation may be set up, while an unnecessary reduction in the frequency of the blows unduly prolongs the test. If the height of the fall is always selected to be one of a standard series of heights (say, 2·5, 3 or 3·5 inches—6, 8 or 9 centimetres), it will be found from experience with different qualities of steels that the particular quality under test will probably break with approximately 1,000 blows at one of these selected standard heights of fall. All tests carried out at the same height are strictly comparable, and the number of blows required to fracture the test piece is a measure of the quality of the material.

The shape and size of the notch in the specimen is of great importance, uniformity being essential in any comparative tests. A grooving tool, which has been designed for the purpose of cutting the groove in the centre of the specimen, is supplied with the machine. This tool can be used with a lathe, or the groove may be turned while the test piece is clamped in a vice. A gauge, which fits into a diameter of exactly 0·4 inch (10·16 millimetres), is also included.

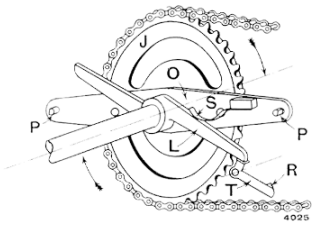

Fig. 23.

Cat. No.	Fig. No.	
23141	**21**	**Repeated Impact Testing Machine, without driving motor.**
23142		**Ditto, mounted on base with motor and reduction gear.**

MANOMETERS

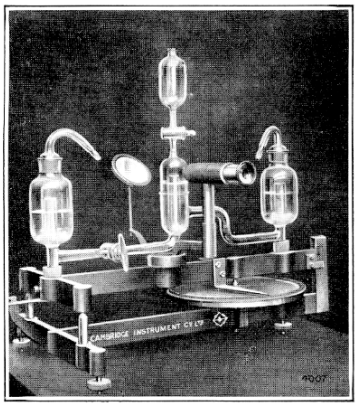

Fig. 24. 43 × 28 × 38 cm.

Chattock Micromanometer. The instrument illustrated in Fig. 24 was designed by Professor A. P. Chattock for the measurement of small pressure differences (see *Phil. Mag.*, 1901, i., 73). It has been largely used for the measurement of air resistance in aerodynamical laboratories, for determining the pressures in burners and the flue draughts exerted by gas appliances, and for the standardisation of other types of sensitive gauges. The apparatus is similar in principle to a U-tube, the difference of pressure on the surfaces of the water in the two limbs of the tube being measured by tilting the gauge through a small angle, so that there is no displacement of water along the tube. Errors due to capillarity and viscosity are thus avoided. The glass U-tube, which is of unusual form, is mounted on a metal frame, the tilt of which can be varied by a micrometer screw. The left limb of the U-tube is continued upwards into, and is concentric with, the central vessel, to which the right limb is connected. This vessel is filled with oil and water, and communicates through a tap at its upper extremity with an oil reservoir. The surface of separation of the oil and the water, which is formed at the upper extremity of the left limb inside the central vessel, is illuminated by a small mirror, and its position is observed by means of a microscope attached to the frame. Any alteration in the difference of pressure in the two vessels forming the extremities of the U-tube causes a displacement of the separation surface, which is kept in coincidence with the cross wire of the microscope by rotating the micrometer head.

The dimensions of the gauge are such that one revolution of the micrometer screw corresponds to a pressure difference of 0·0255 inch (0·65 mm.) of water, the pitch of the screw being 0·5 mm. The micrometer scale has 100 divisions, and a movement corresponding to one quarter of a scale division can be detected by the microscope, enabling the pressure difference to be observed to 0·00006 inch (0·0015 mm.) of water, or 0·000002 lb. per square inch (0·00015 gms. per sq. cm.). The standard gauge shown in Fig. 25 is capable of measuring pressures up to about 0·8 inch (20 mm.) of water. For pressure differences beyond this range, instruments of similar design may be supplied, having greater or less distance between the centres of the vessels forming the extremities of the limbs of the U-tubes.

The micrometer screw is fitted with a large flywheel, which enables the gauge to be tilted with considerable rapidity. If, however, the pressure difference is exceptionally large, or is applied quickly, the tap in the horizontal limb can be used to damp the movement until the micrometer head has been set approximately at the true reading. If the approximate value of the reading is unknown, the pressure can be applied gradually by utilising a device consisting of capillary tubes, which are cut out when readings are actually taken.

For approximate determinations, or for unsteady pressures, a simple U-tube (shown in the upper part of Fig. 25) is used, filled with either water or mercury. The position of the liquid surface is observed by the microscope, which is moved to the end of the frame for the purpose. For measurements of water pressure differences, the gauge shown in the lower part of Fig. 25 is used. The end vessels are about half filled with mercury, water occupying the remaining space. The oil chamber is mounted above one of the end vessels, but is similar to the standard form.

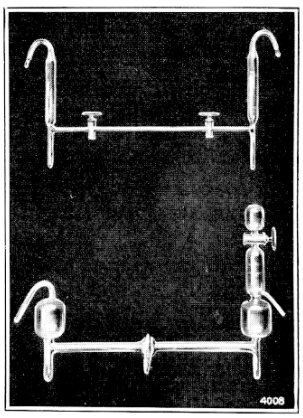

Fig. 25.

Cat. No.	Fig. No.	
22131	**24**	**Chattock Micromanometer.**

MANOMETERS

Continued

Krell Manometer. This instrument (see Fig. 26) may be used to measure pressure differences when the high accuracy of the Chattock Micromanometer is not required. It is a modified form of U-tube, comprising an inclined glass tube filled with coloured alcohol, connected by rubber tubing to a reservoir having a sectional area 400 times that of the glass tube. When the liquid rises in the inclined tube the decrease in level in the reservoir is so small as to be negligible; the position of the meniscus level in the glass tube thus forms an accurate measure of the pressure difference under observation. The inclined tube is mounted upon a metal plate pivoted at one end and fitted with two spirit levels set respectively at angles of 3° and 6° to the tube. When the apparatus is used for measuring velocities below 30 m.p.h., the tube is inclined by means of levelling screws until the 3° spirit level is horizontal; when used for velocities exceeding 30 m.p.h., the 6° spirit level is employed. The displacement of the liquid in the inclined tube is read on a scale 300 millimetres in length. The reservoir is also mounted upon a hinged plate provided with levelling screws, by means of which the meniscus level in the inclined tube may be brought opposite the scale zero at the commencement of a test, thus eliminating zero corrections. The head of liquid then equals the displacement of the liquid in the tube multiplied by the sine of the angle of inclination.

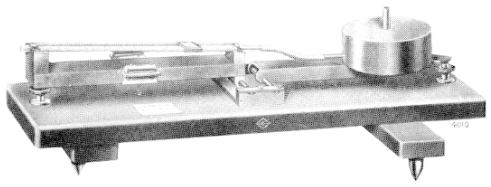

Fig. 26.
76 × 28 × 18 cm.

When used with a pitot tube, as illustrated in Fig. 27 or 28, velocities up to 40 m.p.h. can be measured to an accuracy of about 1·5 per cent. If the instrument is calibrated against a standard gauge, such as the Chattock micromanometer, a higher degree of accuracy can be obtained.

Cat. No.	Fig. No.	
22115	**26**	**Krell Manometer.**

PITOT TUBES

Pitot Tubes are used with a manometer or a differential pressure gauge to measure the velocity of flow of gases or air. Under laboratory conditions, measurements can be made to a high degree of accuracy, while the instruments are also convenient for industrial use. A Pitot Tube consists of a dynamic tube—pointing up-stream, parallel to the current of air—which determines the sum of the velocity and static pressures, and a static tube by means of which the static pressure alone is determined. The patterns illustrated are the result of experiments made at the National Physical Laboratory. Two brass tubes are arranged concentrically, a plug between the ends of the tubes being shaped to a hemisphere. The inner tube, open at the end, and pointing up-stream, is the dynamic tube, while the outer or static tube has a ring of small holes drilled perpendicular to the axis at a definite distance from the open end of the inner tube. The difference of pressure in the two tubes, as indicated by the manometer or differential pressure gauge to which they are connected by flexible tubing, is equal to half the density of the gas multiplied by the square of the velocity of the gas. Fig. 28 shows the standard laboratory pattern, while Fig. 27 shows a Pitot Tube for industrial use, fitted with a screwed gland enabling it to be fixed in the pipe and adjusted for pipes of different diameters. Sometimes the screwed gland is arranged to function as a universal joint. Either pattern is suitable for depths of immersion up to about 33 centimetres; tubes of other lengths can be supplied to order. Pressure gauges for use with Pitot Tubes are described in List No. 152: "Draught and Pressure Gauges."

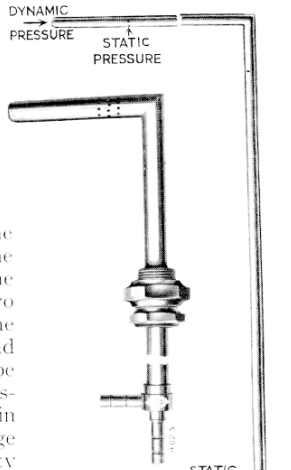

Fig. 27.



Fig. 28.

Cat. No.	Fig. No.	
22114	**27**	**Pitot Tube, Industrial Pattern.**
22113	**28**	**Ditto, Laboratory Pattern.**

MOLL THERMOPILES

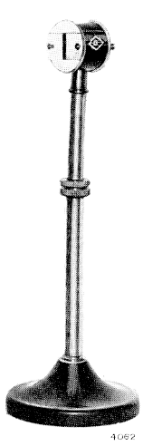

Fig. 29.
Maximum height 35 cm.

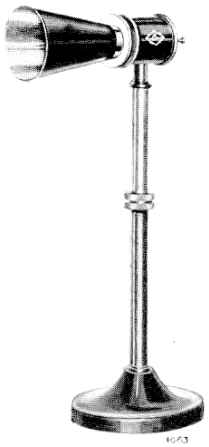

Fig. 30.
Maximum height 35 cm.

THESE Thermopiles, designed by Dr. Moll (see *Konink. Akad. Wetensch., Amsterdam, Proc.*, 1913, xvi., 568; *Proc. Phys. Soc.*, 1923, xxxv., V., 257; and *Phil. Mag.*, 1925, 1., 618), are rapid in action, and give a high electromotive force when exposed to feeble radiations. They are built up of a number of elements, each of which comprises a pair of strips of different metals joined end to end and soldered at their outer extremities to copper bars. The elements can be exposed to radiation throughout their length. When thus exposed, the middle junction attains a much higher temperature than the outer junctions, owing to the difference in heat capacity, while the high conductivity between the junctions and the small heat capacity of the middle junction cause a steady electromotive force to be quickly set up. The elements may be combined to build up either linear or surface Thermopiles; five standard patterns are illustrated. In each pattern the Thermopile is mounted on a stand, the height of which may be readily varied. Any two Thermopiles of one pattern can be adjusted to give approximately the same electromotive force, rendering them suitable for use in differential work. Moll Galvanometers, for use with these Thermopiles, are described in our List No. 167.

Large Surface Pattern (Fig. 30). This model, which has been designed for the measurement of total radiation, comprises 80 elements arranged in three rows within a circle 2 cm. in diameter, and mounted within a brass cylinder having a metal cap fitted with a glass plate. Provision is made for attaching a conical reflector. A plate of rock salt can replace the glass plate when greater sensitivity is desired. The photographic record reproduced in Fig. 31, obtained in conjunction with a Moll Galvanometer, shows intermittent radiations from a candle 2·5 metres distant from the Thermopile, and demonstrates the high sensitivity and rapidity of action which can be obtained.

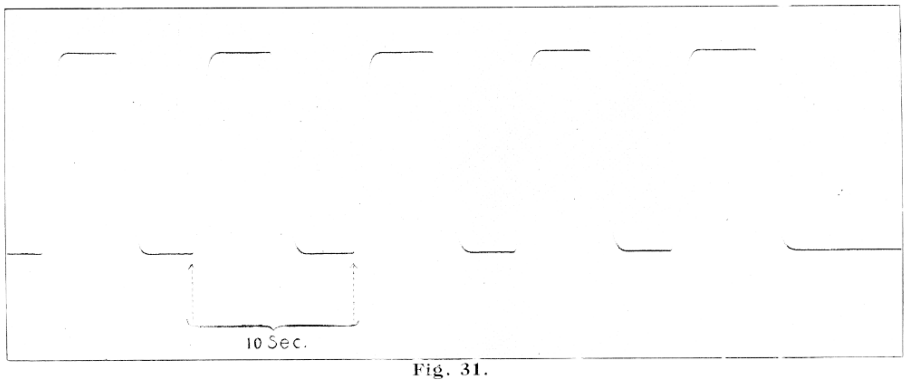

Fig. 31.

Linear Pattern (Fig. 29). This pattern, designed for spectral investigations, consists of a single row of 30 elements mounted in a brass cylinder. At the front is carried a simple slit 2 cm. long and of variable width, and at the back an ebonite plate, in the centre of which is a glass-covered hole (with ebonite cover), making it possible to see the slit through the spaces between the strips and to bring the slit visually in coincidence with a spectral line.

MOLL THERMOPILES

Continued

Small Surface Pattern (Fig. 32). This Thermopile is intended primarily for school use. It consists of 17 elements placed in a circle of one centimetre diameter. The holder is closed by a cap fitted with a glass plate and arranged to carry a conical reflector. When making experiments with long wave lengths, the glass plate is removed.

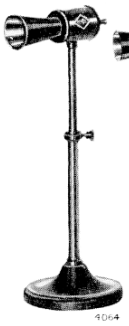

Fig. 32. Max. height 25 cm.

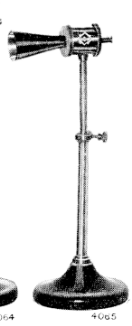

Fig. 33. Max. height 25 cm.

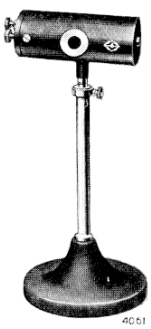

Fig. 34. Max. height 27 cm.

Micro-Thermopile. In this Thermopile (Fig. 33) a small surface is obtained without sacrificing sensitivity. Eighteen elements are contained in a circle of only 6 millimetres diameter, the sensitive part being protected from air currents by a screen of fluorite, which transmits all kinds of rays almost without absorption. The Micro-Thermopile is suitable both for spectral investigations and for measurements of total radiation ; it is therefore supplied with two caps, one having a circular opening in which a conical reflector can be placed, and the other carrying a variable slit 6 millimetres in length.

Vacuum Thermopile. In the Thermopile illustrated in Fig. 34, a considerable increase in sensitivity is obtained by mounting the element within a vacuum, thus eliminating loss of heat due to air currents. The sensitivity is still further increased by employing a single element of the smallest practicable dimensions (0·001 mm. by 0·1 mm. by 8 mm. long), thus reducing to a minimum the losses due to conduction. The element is mounted on platinum wires within an exhausted glass bulb, which is protected against unequal heating by a metal case having insulated double walls, provided with windows in front of, and behind, the thermo-junction. The front window is fitted with an optically worked glass plate, which can be replaced by a microscope objective. A lens fitted to the rear window enables the position of the thermo-junction to be observed. For spectral measurements in the ultra-violet or infra-red regions the Thermopile may be supplied with a plane window of quartz or fluorite. When a fluorite window is fitted, it is necessary to connect the Thermopile to a high vacuum pump, a connecting piece being provided for this purpose.

TABLE

showing the e.m.f. (microvolts) in thermopiles at about 20° C., exposed to the blackened surface of a Leslie cube (10 × 10 × 10 centimetres) at 100° C., and to a candle, placed 50 centimetres from the plane of the thermopile.

Pattern.	Cat. No.	Fig. No.	Window.	With reflector.		Without reflector.		With 1 mm. slit.		Approx. Resistance (ohms).
				Black surface.	Candle.	Black surface.	Candle.	Black surface.	Candle.	
Large surface	**33341**	**30**	Glass Uncovered Rock salt	— 2000 1800	720 2200 2000	— 330 300	120 360 330	— — —	— — —	50
Linear	**33342**	**29**	Uncovered	—	—	—	—	22	24	22
Small surface	**33343**	**32**	Glass Uncovered	— 500	240 550	— 85	40 90	— —	— —	10
Micro	**33344**	**33**	Fluorite Uncovered	470 750	500 820	47 75	50 80	8 13	9 14	30
Vacuum	**33345**	**34**	100 microvolts given for a radiation of 10^{-6} cal./sec.							30

BOLOMETER

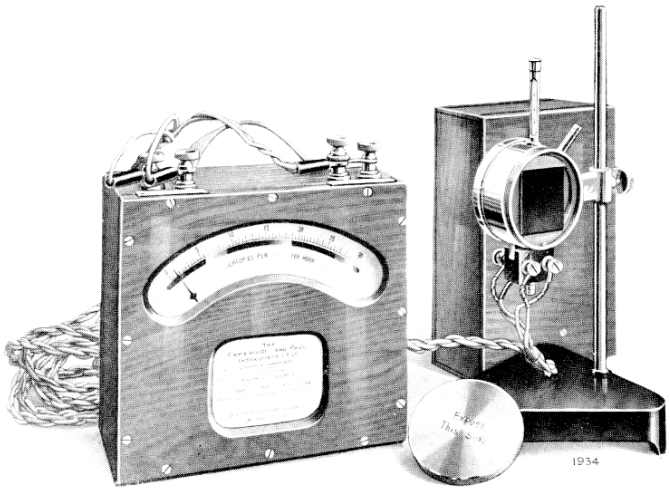

Fig. 35.

Indicator, 23 × 10 × 20 cm. Receiver, 12 × 5 × 18 cm.

THIS instrument was designed by Professors Bone and Callendar and Mr. H. J. Yates, for the direct measurement of the radiation from furnaces, etc. The receiving portion, shown on the right in Fig. 35, consists of two exactly similar flat coils of platinum wire, wound on mica plates and mounted on the two ends of a cylindrical support. The platinum coils are blackened to secure more complete absorption of the radiation and caps are provided for the two ends of the cylinder so that either coil or both may be shielded from radiation. The central portion of the cylinder is made hollow and provided with inlet and outlet tubes so that a stream of water may be passed through for the purpose of maintaining a uniform temperature. The two platinum coils are connected to form two arms of a Wheatstone bridge circuit, the ratio arms of the bridge and the galvanometer being contained within the case of the portable indicating instrument, shown on the left in Fig. 35. Since the two platinum coils are exactly similar, there will be no deflection of the galvanometer when neither is exposed to radiation. A rise in temperature of either coil due to radiation falling upon it will throw the bridge out of balance and cause a deflection of the galvanometer, which is a pivoted moving coil instrument. The indicator is calibrated to read directly in calories, the range being 0-30 kilocalories per square foot per hour. Full scale deflection corresponds to a rise in temperature of about 13°C. on the exposed side. The range may be increased by cutting out resistance in definite steps from the arm of the bridge in which the exposed coil of the Bolometer is connected. This adjustment, which is carried out by means of terminals on the indicator case, enables ranges of 30-60, 60-90 and 90-120 kilocalories per square foot per hour to be obtained.

A 2-volt accumulator provides the current for the bridge circuit. In order that the same deflection shall always be produced by a definite change in the resistance of one of the coils, it is necessary that the current should be constant. This may be ensured by connecting the indicator at intervals to a test circuit, and adjusting the current until the pointer is deflected to a definite mark at the end of the scale.

Cat. No.	Fig. No.	
33331	**35**	**Bolometer Outfit.**

SURFACE TENSION APPARATUS

THE apparatus illustrated in Fig. 36 was designed by Dr. P. L. du Noüy for the measurement of the surface tension of liquids by the ring method (see *Journ. Gen. Physiol.*, 1919, i., 521). A complete determination may be made in about 20 seconds, and measurements made to a high degree of precision. The fact that only a small quantity (1 c.c.) is required of the liquid under test renders the instrument useful for tests on fluids which are only available in small quantities. The instrument may be readily standardised for relative measurements by the use of pure water at 18° C.

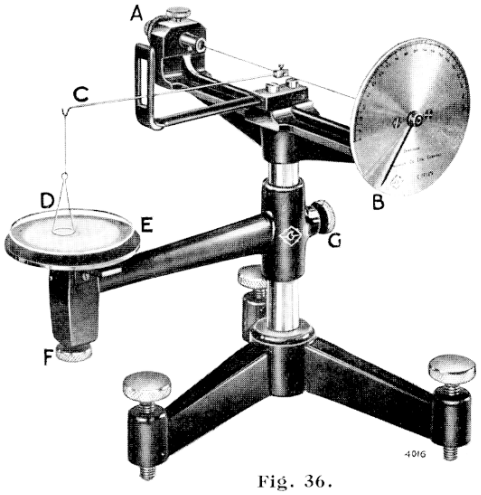

Fig. 36.
25 × 26 × 26 cm.

The apparatus consists essentially of a stand provided at the top with a fine steel wire stretched between end supports. One end of the wire is clamped at *A*, and the other is attached to a worm-wheel controlled by a thumb-screw. To the worm-wheel is also attached a pointer *B* which moves over a metal scale graduated in degrees (0-180). To the middle of the wire is clamped a hollow light steel lever *C* with a small hook in the outer end. A stirrup *D*, attached to this hook, carries a loop of platinum-iridium wire with a periphery 4 centimetres in length. The watch glass, or other vessel containing the liquid under test, is placed on the platform *E* and raised by means of the adjusting screws *F* and *G* until the platinum loop just makes contact with the liquid. The pointer *B* having been previously set at zero, the torsion of the wire is gradually increased by means of the thumb-screw controlling the worm-gear, until the loop of wire just breaks away from the liquid. The reading in degrees on the scale is then converted directly into dynes per centimetre by a simple calculation based on the value of pure water at the same temperature.

Dr. du Noüy has used the apparatus extensively in investigations on the surface equilibria of colloidal solutions—both simple and complex. Tests have been made on serum solutions with a view to seeing, for example, how the surface tension is affected by changes in temperature or by the action of such gases as CO_2, N_2 and O_2. Colloidal solutions of metals have been studied in a similar way. Investigations have been made into the size of various molecules, such as those in egg albumin and sodium oleate. An important application is the measurement of the surface tension of sugar solutions. G. C. Albritton and P. M. Horton, of the Louisiana State University, have found the apparatus useful in connection with the determination of the amount of gums present in C.P. sucrose solutions. Measurements of the surface tension facilitate the determination of the efficiency of various filtration processes, the relative worth of decolorizing chars for refining and the classification of raw sugar as to ease of refining (see *Facts about Sugar*, 1927, xxii., 40). M. Berge (*Sucr. Belge*, 1927, xlvi., 202) has shown how surface tension affects crystallisation, and how, in turn, it is influenced by the presence of organic colloids. Full details with regard to the manipulation of the apparatus and many of its applications are contained in Dr. du Noüy's book, entitled *Surface Equilibria of Biological and Organic Colloids*.

Cat. No.	Fig. No.	
32231	**36**	**Surface Tension Apparatus.**

RAY-TRACK APPARATUS

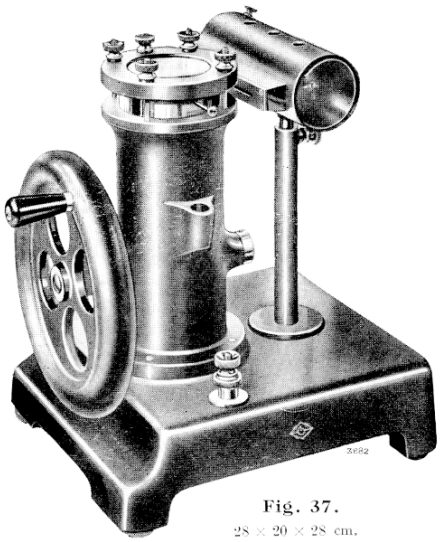

Fig. 37.
28 × 20 × 28 cm.

THE apparatus illustrated is a modified form of the cloud expansion apparatus originally devised by Professor C. T. R. Wilson (see *Proc. Roy. Soc.*, 1911, lxxxv., 285, and 1912, lxxxvii., 277), by means of which it was possible to make visible the tracks of ionising particles through a moist gas by condensing water upon the tracks of the ions immediately after their liberation. In 1921, some important modifications were introduced by Mr. Takeo Shimizu, enabling observations to be made of continuous emissions of *alpha* and *beta* particles and of the tracks of the electrons liberated by X-rays. It was also possible to take stereoscopic photographs on cinematograph film of the paths of the particles in space.

It is found, however, that among schools, colleges, and technical institutes there is a demand for a simpler form of apparatus which renders the phenomena easily visible, but which does not necessarily enable photographs to be taken of the tracks. The instrument illustrated in Fig. 37 will be found entirely suitable for this purpose. The principle involved in the simplified model follows the arrangement, as in Mr. Shimizu's apparatus, of a reciprocating piston by which a condition of supersaturation is produced in the cloud chamber and tracks of the particles are obtained at each expansion. The expansions may be timed to occur at rates from about 50 to 200 per minute. The apparatus is operated entirely by hand.

The principle of operation can be seen clearly from Fig. 38. The piston *H*, the head of which forms the floor of the expansion chamber *G* (55 mm. diameter, 10 mm. high), is connected near its mid-point to a crank *A*, which is driven by the hand wheel *D*. The expansion ratio of the chamber is a constant value. At each expansion, clouds are formed on the ionised particles in the ray tracks, thus making the tracks visible through the cover glass *J*. In order to dissipate these clouds and obtain a clear chamber, an electrostatic field is produced in the chamber by covering the inside of the cover glass with a film of water which is charged negatively with respect to the metal piston. Radio-active substance for the production of rays is introduced on the end of the pin *C*, which fits into a tube in the glass cylinder surrounding the chamber. If it is desirable to reduce the velocity (and therefore the length) of the *alpha* rays, they can be passed through an aluminium screen. The instrument is quickly set up and easily operated, a few expansions serving to filter out any dust originally in the air. To obtain a good background for the tracks, a filter paper covered with liquid Indian ink is placed on the piston head. The chamber is illuminated by means of a parallel beam of light from the filament lamp *F*, the position of which is adjustable. The lamp supplied is a 20-watt metal filament and is run off the main supply. A spare glass cylinder and cover plate are supplied with each outfit, together with a quantity of filter paper. Some photographs of clouds condensed on the ions set free in moist air by particles of different kinds, are reproduced on the opposite page.

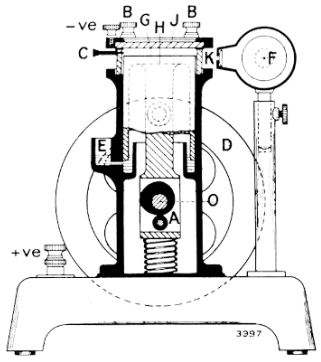

Fig. 38.

Cat. No.	Fig. No.	
39214	**37**	**Ray-Track Apparatus complete.**

RAY-TRACK APPARATUS

Photographs of Ray Tracks



No. 1



No. 2.



No. 3.

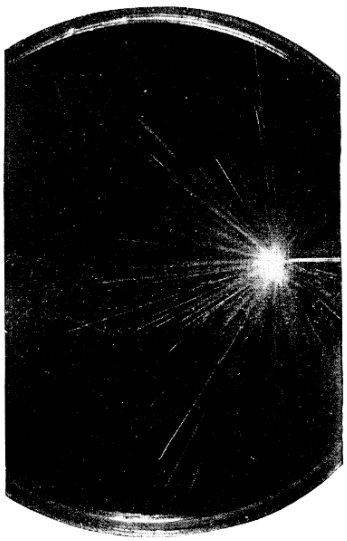

No. 4.



No. 5.

Nos. 1 and 2.—*Alpha* ray tracks obtained in air in a magnetic field of (No. 1) 43,100 Gauss, and (No. 2) 39,400 Gauss. Expansion of the air, 1·4. *(Reproduced by courtesy of Dr. P. L. Kapitza.)*

No. 3.—*Alpha* rays from radium. The *alpha* particles have traversed the air after the expansion.

No. 4.—*Alpha* rays from radium. Some of the *alpha* particles have traversed the air before the expansion, others after the expansion.

No. 5.—Ionisation by X-ray beam about 5 mm. diameter. The X-rays traversed the air before its expansion; the positive and negative ions have been separated by the electric field before losing their mobility by the condensation of water upon them.

(Nos. 3, 4, and 5 reproduced by courtesy of Professor C. T. R. Wilson and the Council of the Royal Society.)