No. 29.

CARL ZEISS

OPTISCHE WERKSTÄTTE

JENA.

MICROSCOPES

AND

MICROSCOPICAL ACCESSORIES.

1891.

Terms.

Each article specified in this Catalogue will be supplied singly or otherwise at the prices subjoined.

The price of completely fitted Microscopes is in all cases the sum-total of the individual items.

The quotations are understood: goods delivered loco Jena, packing charged extra, **net cash without any reduction,** cheques upon a principal town in Germany, England or France being also accepted.

Goods are forwarded, value insured, at the risk and cost of the buyer. In case of special shipping instructions not being given foreign orders will be despatched by the best possible route and with every precaution.

It is requested that the name and destination be plainly written in all orders and, to prevent mistakes, that the number or date of this Catalogue be quoted.

Jena, 1891.

Carl Zeiss,
Optische Werkstätte.

Telegrams: "Zeiss Werkstätte" Jena.

A selection of completely fitted Microscopes for the most varied requirements will be found at the end of this list.

We shall be glad to supply for scientific publications electros of the figures contained in this catalogue, as well as some electros which we have got in reduced size.

Unauthorized reproductions of the figures or text of this catalogue are prohibited.

Contents.

page

Objectives and Eye-pieces 1

Apochromatic Objectives 7

Compensating Eye-pieces 15

Projection Eye-pieces 18

Achromatic Objectives 19

Huyghenian Eye-pieces 23

Accessory Apparatus for testing Objectives 24

Stands 26

Specification and Prices of the various Stands 32

Accessory Apparatus for the Microscope

Illuminating Apparatus 57

Appliances for changing the Objectives on the Stand 67

Apparatus for measuring and counting microscopical Objects . . 70

Drawing Apparatus 77

Arrangements for Polarisation 79

Spectroscopic Eye-pieces 81

Various optical and mechanical Apparatus 85

Apparatus for Photo-micrography 92

Dissecting Microscopes and Magnifiers 100

Microtomes 110

Slips and Covers 112

An asterisk denotes that the apparatus or optical combination so marked originated in our factories, i. e. was either introduced by us as new or, at any rate, first made by us in the manner here described.

Objectives and Eye-pieces.

In our last catalogue (No. 28, issued in 1889) we referred to the advance made, through our efforts, a few years previous to the publication of that catalogue, in the practical development of the microscope. It was there pointed out that this advance was, in a great measure, due to the results obtained in the production of new glasses (borate and phosphate glasses in particular) by the "Glastechnisches Laboratorium SCHOTT and Genossen", which has been established here, with our cooperation, as the outcome of long continued experiments by Dr. SCHOTT and Prof. ABBE. By the use of these new glasses, which by their properties with respect to refractive power and dispersion constitute a much superior material for the construction of microscope lenses, and the application of new formulae in the construction of the lenses, we have, since 1886, produced microscope objectives which possess a considerably more perfect correction both of chromatic and spherical aberration, and therefore a much greater concentration of light in the image, than had hitherto been attained. We also introduced eye-pieces specially adapted for use with these objectives, which, in addition to other advantages of minor importance, produce almost perfect achromatism and give a sharp image over the whole visual field.

These new combinations which were first published in August 1886 under the designations "Apochromatic Objectives" and "Compensating Eye-pieces" and "Projection Eye-pieces" are now extensively used and appreciated (we refer to the numerous comments in various scientific and technical periodicals and works), and have stood the test to which they were put as a means of advanced scientific research. At the request of eminent microscopists the series of these objectives has been increased by the addition of a few new types (vid. below).

The present catalogue includes, in addition to this new series, most of our older achromatic objectives and ordinary eye-pieces. For although there is every reason to assume that in the course of time the apochromatic lenses, at least in the more difficult departments of microscopical research, will entirely supplant the older objectives, yet there are lots of problems in microscopy that do not demand the highest attainable degree of perfection for their solution and in the plurality of such cases the former achromatic microscope will be all that is needful, provided it is good of its kind and thoughtfully and carefully made. The objectives and eye-pieces of the older type have certainly this advantage that, thanks to their much simpler construction, really good lenses of this class can be supplied at considerably lower prices than the lenses of the new series which are much more complicated and involve in their production an extraordinary degree of manual skill.

For these considerations we have, in publishing the last edition of our catalogue, omitted from the list of our former objectives only those numbers whose special purpose is at present undoubtedly better realised by the apochromatics — namely a few of the low power dry lenses of relatively large aperture and the very short and very long focus lenses in the series of water and homogeneous immersions.

The original achromatic objectives, moreover, have been considerably improved in detail by the use of the new varieties of glass and such other alterations as their type of construction permitted. The higher powers of these lenses — both of the dry and immersion series — where the advance thus effected is relatively considerable, might be termed, after the example of other makers, "Semi-Apochromatic lenses".

The original prices of these systems have not sustained any change by these improvements.

In the special catalogue of 1886 we made a beginning and introduced a rational system of designation of the objectives and eye-pieces of the new series in contradistinction to the prevailing purposeless and arbitrary method.

Although we consider this system to be more practical than any of the usual conventions of lettering and numbering, and though its universal adoption would decidedly constitute a step in advance, we notwithstanding thought it wiser to desist, for the present, from redesignating our older i. e. achromatic objectives.

Great alterations in the focal lengths of both objectives and eye-pieces would have been necessary in order to designate these by the same convenient round numbers as in the new series. Our microscopes, however, being in such extensive use, so many microscopists have become accustomed to the focal lengths hitherto adopted and the usual denotation of the various items, that a radical alteration in this direction might give rise to considerable confusion. For these reasons the former designation of the objectives by letters and the arbitrary numeration of the eye-pieces has been retained in the older series.

The manufacture of all our objectives is based upon the method of complete theoretical computation of all the constructive types previous to their actual manufacture. By this process, which was introduced by Prof. ABBE in our works in 1868 and has since been adhered to by us, it has become possible to employ, through judicious division of labour constantly controlled by scientists, a large number of persons in the production of articles of the greatest possible perfection.

Strictly mathematical computation of every detail of construction combined with exact technical methods of working and a systematic control of each phase of manufacture, obviate all empirical tests and ensure extraordinary uniformity of our glasses from the highest to the lowest powers, at the same time altogether excluding specimens of inferior quality. All objectives are uniformly free from spherical aberration up to the marginal zone (proper thickness of cover with the higher powers being understood) and, as far as possible, perfectly corrected for colour. Special consideration is also given to the removal of aberrations in the extra-axial part of the field and to aplanatism.

Working Distance. Owing to the importance of a good working distance for the convenient and safe employment of the higher powers, particular attention has been given to this factor in calculating the formulae of the various glasses. Our stronger objectives possess therefore unusually large working distances, in comparison with their focal length and aperture.

Tube Length. All the objectives named in this catalogue are adjusted for a tube length of 160 mm ($6^1/_2$ in.), except where a remark to the contrary is expressly made in the following pages or unless an objective for another tube length be specially ordered. The length is reckoned from the contact surface of the objective thread to the upper end of the body on which the eye-piece rests. This may be read off directly on stands of our make by the divisions on the draw tube.

The objectives a, aa, A, B and C may be used on the large English stands with 10-inch tubes without appreciable loss.

All the rest, particularly the apochromatic series and also the homogeneous immersions, perform more or less deficiently on stands of English model, unless specially adjusted for these.

In foreign orders it should always be stated whether the objectives are to be adjusted for the short (continental) or for the long (English) tube.

Thickness of Cover. All objectives in fixed mounts are, unless otherwise ordered, corrected for a medium thickness of cover between 0.15 and 0.20 mm. In the higher series (from the apochromatic 8 mm and achromatic D upwards) the thickness of cover corresponding to the most perfect correction is indicated on the side of the mount by small figures (millimeter). It is, as a rule, sufficient for ordinary work with those objectives which we supply only in fixed mounts, to use covers of an estimated medium thickness.

Homogeneous immersion objectives are, within wide limits, independent of the thickness of cover.

Correction Adjustment. The graduation and numbering on the correction collar, read off on the fixed index, indicates directly for each position of the collar the corresponding thickness of cover (in hundredths of a millimeter) which yields the best correction for that position. The correction for cover must be carefully adjusted, particularly in the case of the apochromatics 4.0, 3.0 mm (dry) and 2.5 mm (water immersion) and the achromatic lenses F and J, failing which the efficiency of the lenses will be greatly diminished.

The homogeneous immersion objectives are only supplied in fixed mounts because, as already stated, their efficiency is within rather wide limits independent of thickness of cover-glasses and also because any alteration in the distance of their lenses interferes with

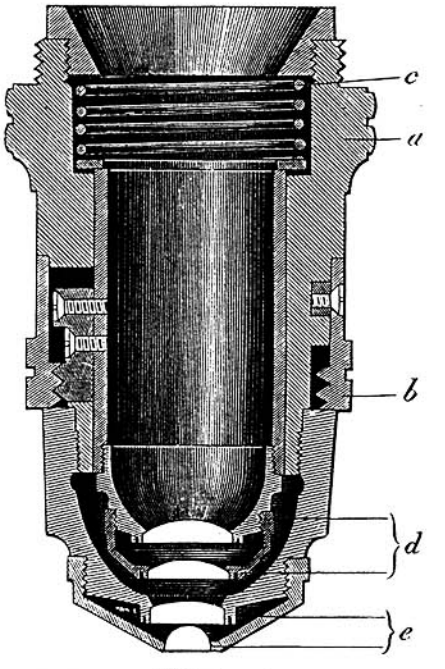

Fig. 1.

The correction ring *b* serves to adjust the distance between the upper part *d* of the system and the lower part *e* which is attached to the mounting *a*.

the perfection of their correction. Considerable variations in thickness of cover are best compensated for

by slightly lengthening the body-tube for thinner covers,
„ „ shortening „ „ „ thicker ones.

On page 29 is stated, how the thickness of cover-glasses can be easily ascertained for the use of our stands.

The immersion fluid which we recommend for the homogeneous objectives is Cedar-wood oil (from Juniperus virginiana) which we have used from the first. We supply the same in a thickened condition, which not only does away with its inconvenient fluidity, but at the same time obtains almost perfect identity of refractive index with that of the cover-glass. A bottle of this oil is supplied with each objective and may be procured from us at any future occasion (price M. 0.75 pr $^1/_2$ oz bot). We expressly request, that no immersion fluids derived from other sources be used with our objectives, or at least none which have not been carefully tested as to their proper refractive power — as is done by us — because the use of unsuitable fluids implies considerable loss in the optical performance of the objective.

As regards the relative merit of the homogeneous and non-homogeneous (water etc.) immersion systems, the former claim superiority over the latter (focal length and aperture being equal) by reason of their eminently superior defining power and their greater insensibility as to variations of thickness of cover-glasses. Water immersion systems are only to be preferred in such cases where the nature of the objects does not admit of oil being used as immersion fluid.

The mounts of all objectives are provided with the **English standard thread** of about 20 mm external diameter. In the series from A to J however, and also in DD when not fitted with correction adjustment, the lower part of the mount containing the lenses is made to unscrew from the adapter and may then be used with the narrow-gauge thread.

The name of our firm is engraved on the mountings of all objectives, on the apochromatics also the aperture, focal length and tube length for which they are adjusted and on the ordinary glasses the letter by which they are designated.

When ordering objectives which are intended for use with stands not made by us it is in all cases, where these are not noted for having the same screw-thread and internal diameter of tube, advisable to send the tube in question for the purpose of adapting the objectives and eye-pieces.

*Apochromatic Objectives.

While referring to the paper of Prof. ABBE, entitled „Ueber Verbesserungen des Mikroskops mit Hilfe neuer Arten optischen Glases" (Sitzungsberichte der med.-naturw. Gesellschaft zu Jena vom 9. Juli 1886)[1]) and to the forthcoming work of our colleague Dr. CZAPSKI on the „Theorie der optischen Instrumente" (Breslau 1891, Trewendt), which combine to furnish a complete exposition of the scientific aims and principles which governed the construction of the apochromatic lenses, we must here content ourselves in briefly stating the essential features of these lenses.

These objectives essentially differ from all other microscopical lenses hitherto constructed by the simultaneous realisation of the two following conditions: viz. 1) the union of three different colours of the spectrum in one point of the axis, that is to say, the removal of the so-called secondary spectrum inherent to the older achromatic lenses, and 2) the correction of spherical aberration for two different colours in contradistinction to that for one in the brightest part of the spectrum only.

With all optical systems hitherto constructed, microscopes included, the sharpness of the image projected is limited to one particular colour of the light transmitted (i. e. green-yellow in the case of lenses used for ocular observations, blue-violet in photographic lenses), while the other rays give more or less confused images, appearing partly as colour fringes and partly as a general blur. With the apochromatic lenses, however, the projected images are nearly equally sharp for all

1) Sent gratis on application.

colours of the spectrum, and the quality of the projected image is, therefore, within wide limits independent of the nature of the illuminating source, which may be white or compound, or monochromatic light emerging from any section of the spectrum.

In the older series again complete colour correction is obtained for one zone of the objective only, a marked deterioration being observable towards the margin and the centre of the aperture, whilst in the apochromatic lenses it is corrected uniformly for all zones. Consequently, in using ABBE's test-plate, scarcely more colour is perceived with the most oblique illumination than with central light.

Finally, even within the zone of the most complete colour correction of the ordinary achromatics, only two colours can be united in one point. The various coloured images therefore can only fall on the same spot in pairs between which there is a considerable difference in focus. In the new series, however, three colours are brought to a focus, whereby the amount of focal difference for the various sections of the spectrum, from the visible to far into the chemically active portion, is reduced to $^1/_7$ to $^1/_{10}$ of its original magnitude i. e. practically eliminated, and this, as has been stated before, equally for each zone of the objective. The images due to each single colour, thus individually corrected, are rendered coincident and collectively form the final image [1]).

The practical advantages of these new lenses become at once apparent. A considerably increased concentration of light with ordinary eye-piece observation or any other mode of application under all possible conditions of illumination confers on these glasses an acknowledged superiority over the ordinary achromatic lenses both with respect to optical capacity and diversity of applicability.

The natural colours of objects, even in the more delicate tints, are truly reproduced by these objectives. Close to the margin of the field, the images are nearly as sharp as in the centre, though the high aperture and the relatively great working distance render a moderate degree of curvature of the image unavoidable in these objectives as in the older ones; the central and

---

1) It would be a grave error, both theoretically and practically, to view this process of achromatisation of a higher order as here defined in the light of a mere improvement of ordinary "achromatism", such as would result from a diminution of the secondary spectrum while yet only two colours are united, or from achromatisation embodying the principles here indicated but limited to one particular zone of the objective (which might be obtained by the introduction of suitable glasses into objectives constructed after the usual formula).

The word "apochromatic" was introduced by Prof. ABBE as a technical term for this other kind of achromatism, long familiar to scientists as a theoretical idea but only recently realised practically. With deference to intelligible technical phraseology it is desirable that this expression thus clearly defined by its author should retain its original meaning, and any attempt to utilise it for purposes of trade advertisements should be discountenanced.

marginal portions of the field do, therefore, not appear in sharp focus simultaneously, but have to be focussed in succession.

As a result of the great concentration of light afforded by these objectives they permit of the use of very high power eye-pieces without detriment to accuracy or brightness of the image, thus giving high magnifying power with relatively long focal length, thus yielding with the same objective a series of very varying amplifications.

In the annexed list beside the apertures and foci the corresponding objective magnification is stated, i. e. the magnification which the objective alone would give at the distance of distinct vision if used as a simple lens. This is simply 250 (distance for distinct vision) divided by the focal length of the objective in mm. For instance, the objective magnification of a 3 mm objective is:

$$\frac{250}{3} = 83{,}3.$$

The apertures indicated are the guaranteed minimum values; the stated focal lengths are adhered to as closely as possible.

Remarks on the use of the 2 mm Apochromatic Lens of 1.40 mm aperture (homogeneous immersion).

Owing both to the hyper-hemispherical form of the front lens, which is held in situ by a very narrow ridge at the extreme edge of the setting, and its relatively short working distance (0.2 mm) this lens demands careful treatment and should, in particular, be scrupulously guarded against shocks or pressure. As compared with the 2 mm lens of 1.30 aperture this lens possesses a greater resolving and defining power in the proportion of 14 : 13 and gives a brighter image in the proportion of 20 : 17. The 2 mm 1.40 is a decided advantage where exceptionally intricate problems requiring the most delicate apparatus have to be solved, and also in such cases where the lens is to serve as a means of controlling observations made with lower powers; for regular work preference should be given, generally speaking, to the 2 mm 1.30, owing, to the greater firmness of the frontal lens.

The objective 3 mm 1.40 apert. has, however, this advantage over the 2 mm 1.40 that, while possessing the same optical capacity, it has a greater working distance and is also less delicate as regards its mechanical construction.

In reply to numerous enquiries and, in some cases, publicly expressed doubts respecting the

durability of apochromatic lenses

we append the following statements.

All glasses used in the construction of apochromatic lenses have been amply tested through several years' experience and offer a fair guarantee for their immutability, at any rate in temperate climates and on condition that the lenses are not subjected to any undue treatment. This statement does, however, not apply for the present to suit hot climates where an exceptionally damp and hot atmosphere constitutes an abnormally active decomposing agent, which even the older (Silicate) glasses do not permanently resist; in these cases we disadvise the use of apochromatic lenses. A few isolated cases have indeed occurred even in our climate in which the one or the other of the constituent lenses of certain apochromatic systems have become turbid; but it would not be fair to hold us responsible for such contingencies. For be it remembered, the introduction of apochromatic lenses by us necessitated the application of entirely new materials which until then had not been used or tested. The first lenses, necessarily, lacked the kindly aid of experience and it is not surprising that a few failures should have occurred. Whereever varieties of glass used in the construction of lenses proved to be liable to deterioration, the lenses containing such glasses were subjected to reconstruction and all doubtful glasses supplanted by such that were known by experience to possess greater durability.

As in former cases we shall also in future in any such cases, where one of the lenses of an objective supplied by us should exhibit spontaneous changes, not hesitate to repair the damage at our cost. To this promise we attach however the condition that the objective in question be sent to us previous to any attempt being made in this direction by others. In no case should such an objective be disconnected, with a view to clean it, by any other but an expert, as this might suffice to convert a slight irregularity, that could be easily corrected by us, into a serious or even irreparable defect.

New Lenses.

At the request of eminent microscopists we have added to the series of our apochromatic lenses the following types:

1. two objectives of very low power for the purposes of photo-micrography (serial sections etc.) and for projection on a screen — viz. **70 mm and 35 mm Projection systems;**

2. two objectives of large aperture and a shorter focus (for an increased initial amplification) as compared with the older types — viz. **3 mm apochromatic dry system of 0.95 apert.** and **1.5 mm apochromatic homogeneous immersion lens of 1.30 apert.;**

3. an objective having the greatest aperture attainable with the present optical means — viz. 2.5 mm Monobromide of Naphthaline Immersion Objective of 1.60 apert.

ad 1. The systems of 70 and 35 mm focus serve, as stated above, for photo-micrography and projection exclusively. Of these the former can only be used in conjunction with the photo-micrographic stand, the latter, however, may be used with any of the other stands.

The 35 mm lens screws to the lower end of the tube in the usual manner.

The 70 mm lens requires a special conical adapter, which is supplied with each lens, to insert it into the upper end of the tube.

Both are used without eye-pieces.

As a condenser it is best to use a convex lens of a suitable focus (price of lens mounted in sleeve **M. 5.**—) to concentrate the rays of the source of light upon the objective, so that the pencil of rays emerging from this lens may traverse the object before coming to a focus.

In order to predetermine by calculation the amplifications obtainable from these lenses, the distance of the image (i. e. of the focussing plate) from the objective has to be divided by its focal length, i. e. by 70 and 35 respectively and the quotient so obtained is to be diminished by unity, in accordance with the well known formula.

$$N = \frac{b}{f} - 1.$$

Prices:

Projection lens of 35 mm focus **M. 35.—**
„ „ „ 70 „ „ „ **40.—**

ad 2. The two newly constructed apochromatic objectives of relatively short focus present the same principal features as all the older types of this class of lenses. In particular, they require the use of "Compensating oculars", with this exception, however, that — in consequence of the relatively greater initial amplification of the new systems — the highest numbers of eye-pieces should not be used with them, it being in the case of histological and bacteriological investigations not even advisable to go beyond the No. 8 eye-piece.

ad 3. In autumn 1889 we constructed a system which sensibly exceeds with regard to defining power the limits which had existed for the then known objectives whose apertures were of necessity numerically less than the refractive indices of crown-glasses. The objective has an aperture of 1.60 to 1.63 with a focus of 2.5 mm and may satisfactorily be used with the ordinary compensating eye-pieces. The slight traces of colour which are observable near the margin of the field may, if thought necessary, be neutralised by adapting a correcting lens to the eye-pieces No. 8, 12 and 18. Pure Monobromide of Naphthaline serves as the immersion-fluid to this objective, and a small bottle of it is supplied with each objective. The specimens have to be covered with carefully polished flint cover-glasses having an exactly calibrated thickness (of ab. 0.17 mm) and must be embedded in media of a refractivity exceeding 1.60 (e. g. Monobromide of Naphthaline, realgar, iodide of mercury, methylene-iodide, Smith's medium etc.).

When oblique illumination or an illuminating cone having an aperture of more than 1.40 is to be employed, flint slips, a flint-glass condenser and some highly refracting substance connecting both—say monobromide of naphthaline—have to be used.

To obviate misconceptions regarding the capabilities of this lens we will not omit to distinctly state that we do not proffer this lens as an improved means of microscopical research directly applicable to the adopted micro-technical methods;

it has, on the contrary, been constructed for the purpose of placing in the hands of those specially interested in the development of microscopical technique from an optical point of view a means of determining to what extent lenses possessing an aperture exceeding the highest aperture obtainable under the usual conditions of application may successfully be used in certain departments of microscopical research. Every advance in this direction necessarily involves an increase of the external difficulties attending the application of the lens; we are, in particular, referring to the preparation of objects; the difficulties to be surmounted here will be readily appreciated if it be remembered that the aperture can never be made to exceed the refractive index of the embedding medium and the cover-glass.

Originally only a few specimens of this new objective were made as a purely scientific experiment. The results, however, which have been obtained with it by several microscopists, despite of the difficulties attending its application, have encouraged us in including it in our list of objectives, and we shall continue to make this lens as long as nothing better exists in this direction.

A detailed account of the principles of construction of this lens, its mode of application and its capabilities will be found in the Zeitschr. für wiss. Mikroskopie, VI, 1889, p. 417—422 (also English translation in pamphlet form), Journ. of the Roy. Micros. Soc. 1890, p. 11 and H. VAN HEURCK, La nouvelle combinaison optique de Mr. ZEISS et la structure de la valve des diatomées, Anvers 1890.

We shall be glad to forward these publications to applicants.

List of the Apochromatic Objectives.

	Numerical aperture	Equivalent focus in mm	Initial magnification	Price *Marks*
Dry Series	0.30	24.0 *	10.5	140.—
		16.0	15.5	100.—
	0.65	12.0 *	21	170.—
		8.0	31	130.—
	0.95	6.0 *	42	220.— with correction collar
		4.0	63	180.— with correction collar
		3.0	83	200.— with correction collar
Water Immersion	1.25	2.5	100	300.— with correction collar
Homogeneous Immersion	1.30	3.0	83	400.—
		2.0	125	400.—
		1.5	167	450.—
	1.40	3.0	83	500.—
		2.0	125	500.—
Monobromide of Naphthaline Immersion	1.60	2.5	100	800.—

The last named system is supplied together with 25 flint cover-glasses and 3 slips of heavy flint.

Each additional cover-glass . . . . . **M. 1.—**
Each additional slip . . . . . „ **2.—**

Non-achromatic Condenser of 1.60 aperture having a flint-glass front-lens to be used with the monobromide of naphthaline immersion lens (for very oblique or wide illuminating pencils) . . . . . **M. 35.—**

Monobromide of Naphthaline, per bottle containing 15 gr . . „ **1.50**

**** The three objectives 24mm, 12mm and 6mm of the dry series are constructed exclusively for the 10 inch tube, all the others are adjusted either for continental or English tube.***

*Compensating Eye-pieces.

All objectives of considerable aperture, from their peculiar construction (hemispherical fronts) exhibit certain colour defects in the extra-axial portion of the visual field (chromatic difference of the magnification), even if perfectly achromatic in the centre. The differently coloured images which combine to form the final image (DIPPEL 2nd ed. p. 225) are of different dimensions, the blue image being greater than the red one. Whether an image be directly projected by such an objective or whether it be examined with an eye-piece (even of the achromatic or so-called aplanatic type) colour fringes will be observed, increasing towards the margin of the field.

This peculiarity is also possessed by the apochromatic objectives, and to the lower power ones it has been intentionally imparted to a similar degree, a means being thereby obtained to nearly entirely eliminate this error by help of suitable eye-pieces. These are made to possess an equivalent error of opposite sign, that is, the image formed by the red rays is greater than that corresponding to the blue rays. Such eye-pieces therefore serve to compensate the unequal magnification of different colours and the images appear free from colour up to the margin of the field.

This compensatory action of the eye-pieces is manifested, particularly in the higher numbers where the limiting diaphragm is placed outside the lenses, by the fact that the edge of this diaphragm shows a red border, whilst the image of the object formed at this very edge of the diaphragm is perfectly colourless.

The setting of the eye-pieces is so arranged that the lower focal point of all numbers in each series lies in the same plane when inserted in the body-tube. No alteration of focus is therefore required on changing the eye-piece, and the "optical tube-length" (i. e. the distance between the upper focal point of the objective and the lower one of the eye-piece), which is the standard factor for the magnifying power, remains constant. This optical tube-length in the continental microscopes (excluding small differences between the various objectives) is 180 mm, provided that the length of the body, from the screw-collar of the objective to the upper end of the tube on which the eye-pieces rest, is 160 mm.

The eye-pieces of extremely low power designated as **Searchers** serve the purpose of reducing to its lowest limits the available magnification with each objective, thereby facilitating the preliminary examination and the labour of searching for particular points with high powers. Thus No. 1 of this series enables an objective to be employed with its own initial

magnifying power, i. e. as if it were used as a simple lens without an eye-piece. They will be found of special service with immersion objectives, where great inconvenience is caused by having to change a lens already adjusted for another of lower power.

The working eye-pieces for regular observation beginning with a magnification of 4 are likewise of entirely new construction and may be used with advantage even in the highest numbers. The eye-point in all lies so high above the eye-lens and the diameter of the lens itself is so large, that the usual inconveniences attending the use of eye-pieces of short focus are entirely obviated.

Owing to the uniform position of the eye-points of the compensating eye-pieces any one of these may, without difficulty, be used with the usual drawing prisms, including, in particular, the ABBE Camera. The most appropriate for the purpose are naturally the lower powers 4 and 6.

The **numeration of these eye-pieces** is carried out on the principle suggested by Prof. ABBE. The number which denotes how many times an eye-piece, when used with a given tube-length, increases the initial magnifying power of the objective, affords the proper measure of the eye-piece magnification and, at the same time, furnishes the figures for rational numeration. On this basis the series of our compensating eye-pieces is arranged according to their magnifying powers, which are respectively 1, 2, 4, 6. 8, 12, 18, (27), and these figures likewise serve as their designation.

The magnification obtained by combining a compensating eye-piece with any apochromatic objective is arrived at directly by multiplying its number by the initial magnification of the objective as given in the preceding table. An objective of 3.0^{mm} focus for example yields in itself a magnification of 83.3 (calculated for a conventional distance of vision of 250^{mm}); eye-piece 12 therefore gives with this objective $12 \times 83.3 = 1000$.

For the continental and the English model microscopes two distinct series of compensating eye-pieces are made. The corresponding numbers in both series are of a different focal length according to the different lengths of the tubes.

The eye-pieces 1 and 6 are only made for the continental, 27 only for the English tube.

An order for eye-pieces to be used on stands which are not of our make should be accompanied by an exact impression of the edge of the tube in sealing-wax or some other exact gauge of the internal diameter of the tube; the best gauge, will, in all cases, be the tube itself.

List of Compensating Eye-pieces.

	Searcher Eye-pieces		Working Eye-pieces					
Eye-piece No.:	1	2	4	6	8	12	18	27
	For the continental tube:							
Equivalent focal length in mm	180	90	45	30	22.5	15	10	—
Price: Marks	20	20	20	20	30	30	25	—
	For the English tube:							
Equivalent focal length in mm	—	135	67	—	34	22.5	15	10
Price: Marks	—	25	25	—	35	30	30	25

Table of Magnifications of the Apochromatic Objectives with the Compensating Eye-pieces

for an image distance of 250 mm.

Focus of the objective	Searcher Eye-pieces		Working Eye-pieces					
	1	2	4	6	8	12	18	27
24.0	—	21	42	—	83	125	187	281
16.0	15.5	31	62	94	125	187	281	—
12.0	—	42	83	—	167	250	375	562
8.0	31	62	125	187	250	375	562	—
6.0	—	83	167	—	333	500	750	1125
4.0	62	125	250	372	500	750	1125	—
3.0	83	167	333	498	667	1000	1500	—
2.5	100	200	400	600	800	1200	1800	—
2.0	125	250	500	750	1000	1500	2250	—
1.5	167	333	667	1000	1334	2000	3000	—

Carl Zeiss, Optische Werkstätte, Jena.

*Projection Eye-pieces.

These are used for projecting the image formed by the objective on a screen for demonstrating purposes or upon a photographic plate. They consist of a convex lens and a compound system, which is most carefully corrected both spherically and chromatically after the principle of apochromatic lenses, and is entirely free from secondary chromatic aberration and from difference of focus between the visual and chemical rays. A diaphragm is placed between the lenses for limiting the field, and the compound lens can be made to approach or recede from this diaphragm. The cap of the projection eye-piece forms a diaphragm by which internal reflexion in the body-tube is entirely obviated. The aperture of this diaphragm is made to correspond with the greatest aperture of the apochromatic lenses.

The projection eye-pieces are specially corrected for our apochromatic lenses on the principle of the compensating series, but may, nevertheless, be advantageously employed with ordinary achromatic lenses of large aperture.

The designation of these eye-pieces corresponds, as in the case of the other compensating eye-pieces, to those amplifications which they would yield (magnifications being measured after the same principle as for the other compensating eye-pieces) if used for ocular observation.

The magnifications are **2** and **4** for the 160^{mm} tube, **3** and **6** for the 250^{mm} (10″) tube.

We do not construct projection oculars yielding higher amplifications beyond those indicated as these would not possess any practical advantage over the ordinary compensating eye-pieces, which can be used when higher amplifications are required.

The magnification for any distance of image from the eye-piece is obtained, by dividing this distance, expressed in millimeters, by the focal length of the objective in use and multiplying the result by the number of the projection eye-piece employed. Thus the objective of 3^{mm} gives with the projection eye-piece 2 an image magnified 1000 times at a distance of 150^{cm}, for

$$\frac{1500}{3} \times 2 = 1000.$$

This rule holds good, strictly speaking, for long distances only; for short distances the figure so obtained is in excess of the true value.

The image distance may be reduced in the case of 2 and 3 to about 400^{mm} and with 4 and 6 to about 250^{mm} (reckoning from the eye-piece); it may, however, be increased to any desired length.

For further details see "Specialkatalog für Mikrophotographie" (German).

Price of the Projection Eye-pieces: 40 Marks each.

Achromatic Objectives.

Respecting the general character of these objectives we refer to the remarks on pages 2 and 4—6.

To the list of achromatic lenses only one new system has been added. At the same time, however, most of the older types of achromatic lenses have been reconstructed with a view to more completely eliminate imperfections due to spherical and chromatic aberration than had been done formerly or — rather — than could have been done without the aid of the new glasses. With the dry lenses DD, E and F this improvement becomes obvious by the clearer appearance of the image and the increased sensibility of the lenses with regard to differences in the thickness of the cover-glass and length of tube.

To the achromatic lenses enumerated in our last catalogue we have recently added, at the suggestion of Mr Bratuschek of Jena, a water immersion lens of great focal length but having a relatively small aperture, viz **Objective D***. It is calculated to facilitate the examination at medium magnifications (200 to 500 diameters) of living zoophytological objects floating in water troughs. Its large focal distance gives to the microscopist a relatively wide range in following the motions of these living objects. The objective being constructed on the water-immersion principle, i. e. there being always a layer of water interposed between the objective and the cover-glass, the correction of the aberration will not be affected by focussing at various depths of the water-cell, as to a diminution of the stratum of water under the cover-glass always corresponds an increase of the stratum of the water above the cover-glass, and vice versa. This manner of using the lens will, consequently, not interfere with the quality of the image. The relatively small aperture is conditional to the great focal distance; for that kind of observation, however, for which the lens is mainly designed this will, owing to the increased depth, constitute rather an advantage than a disadvantage.

The system may be used with or without cover-glass and gives equally good images both with fresh and sea water.

The magnifications yielded with this objective in conjunction with the Huyghenian eye-pieces are the same as in the case of the D and DD; when used in combination with the compensating eye-pieces it gives nearly the same magnifications as the 4^{mm} apochromatic lens of 0.95 aperture (about 9 % less).

The **Objectives a** are simple achromatic lenses, so mounted that, notwithstanding their great focal length, the body of the microscope remains at its ordinary elevation during observation. In a_1 the thread is so placed that when screwed home the lens is inside the body; it can, therefore, not be used with a revolving nose-piece or other objective-changer. They are only intended for use with the lower eye-pieces.

Objective a* consists of two achromatic lenses combined after a formula peculiar to us. By means of a ring rotating like a correction collar the two lenses can be approximated or withdrawn, whereby, using one of the lower eye-pieces, the magnification is changeable in the proportion from about 1 to 2. This graduation of the magnifying power is obviously useful for many purposes.

We no longer supply the objectives BB, CC; G, K, L (water immersion) and $^1/_8$ and $^1/_{18}$ (hom. immers.) of our former catalogues because their special aim is now, in our opinion, better realised by the apochromatic lenses.

All objectives are also supplied adjusted for the 10 inch body and in the English form of mount.

Regarding the **use of achromatic objectives in conjunction with compensating eye-pieces** it will be well to state here that only our achromatic objectives from DD upwards, i. e. all those having relatively large apertures should be used in that manner. With those of small apertures the use of compensating eye-pieces gives rise to similar errors (though of the inverse chromatic order of succession) in the achromatism of the margin of the field to those effected when apochromatic lenses are being used in conjunction with the ordinary Huyghenian eye-pieces.

Separate mahogany cases for objectives to be kept outside the microscope case, with lock, according to size 7 to 30 Marks.

List of Achromatic Objectives.

	Designation	Numerical aperture	Equivalent focal length	Price without Correction	Price with Correction
				Marks	
Dry series	a_1	—	40mm ($1\frac{9}{16}$")	12.—	
" "	a_2	—	35mm ($1\frac{3}{8}$")	12.—	
" "	a_3	—	30mm ($1\frac{1}{4}$")	12.—	
" "	a*	—	38—26mm ($1\frac{1}{2}$"—1")	40.—	
" "	aa	0.17	26mm (1")	27.—	
" "	A	0.20	18mm ($\frac{3}{4}$")	24.—	
" "	AA	0.30	18mm ($\frac{3}{4}$")	30.—	
" "	B	0.35	12mm ($\frac{1}{2}$")	30.—	
" "	C	0.40	7mm ($\frac{9}{32}$")	36.—	
" "	D	0.65	4.3mm ($\frac{1}{6}$")	42.—	
" "	DD	0.85	4.3mm ($\frac{1}{6}$")	54.—	74.—
" "	E	0.85	2.7mm ($\frac{1}{9}$")	66.—	86.—
" "	F	0.85—0.90	1.85mm ($\frac{1}{14}$")	84.—	104.—
Water Immersion	D*	0.75	4.3mm ($\frac{1}{6}$")	75.—	
	H	1.15—1.20	2.4mm ($\frac{1}{10}$")	110.—	130.—
	J	1.15—1.20	1.8mm ($\frac{1}{14}$")	144.—	164.—
*Homogeneous Immersion	$\frac{1}{12}$	1.20	2.0mm ($\frac{1}{12}$")	160.—	
	$\frac{1}{12}$	1.30—1.35	2.0mm ($\frac{1}{12}$")	300.—	

Cedar-wood oil, $^1/_2$ oz. bot. Mk. 0.75.
Cap bottles for immersion oil, Mk. 1.00.

Table of Magnification

of the Achromatic Objectives with the Huyghenian Eye-pieces

calculated for a tube-length of 160 mm and an image distance of 250 mm.

Eye-piece:	1	2	3	4	5	
a_1	7	10	15	20		a_1
a_2	11	16	23	30		a_2
a_3	20	30	40	50		a_3
a*	4—8	7—14	10—20	15—30		a*
aa	25	35	47	60	77	aa
A, AA	37	50	70	90	115	A, AA
B	60	85	115	145	185	B
C	105	145	200	265	325	C
D, DD, D*	175	240	325	420	540	D, DD, D*
E	280	390	535	680	865	E
F	415	585	790	1000	1275	F
H	320	440	610	770	985	H
J	430	585	810	1030	1315	J
$\frac{1}{12}$	385	530	730	925	1180	$\frac{1}{12}$
	1	2	3	4	5	

Huyghenian Eye-pieces.

We supply these for use with the ordinary achromatic objectives. Their focal lengths and magnifications are shown in the following table.

Eye-piece No.	1	2	3	4	5
Focus in mm	50	40	30	25	20
(Eye-piece) magnification	3	4	5.5	7	9

Price 7 Marks each.

The magnification is computed by the same rule as in the compensating series (see page 16), the varying position of their lower focal planes being, however, taken into consideration.

With regard to the selection of eye-pieces for a microscope we would remark, that all our achromatic objectives are capable of still giving effective magnifications for regular observation with Ocular 4, good illumination being understood in the case of the highest powers.

We no longer supply the „orthoscopic" eye-pieces of former catalogues, as they are greatly inferior to the compensating and projecting oculars.

Respecting the use of Compensating Oculars with achromatic objectives vid. p. 20.

We do not supply Huyghenian Oculars for the long (English) tube.

Oculars for special purposes (Micrometer-, Spectroscopic and others) vid. No. 28—30 and 52—55.

Accessory Apparatus for testing the fundamental properties of Microscopical Objectives.

No.		*Marks*
1	***Apertometer** after ABBE, for estimating the numerical and angular aperture of objectives (Journ. of the R. Micr. Soc. Jany. 1878, p. 19 and 1880, p. 20). For use on any large stand fitted with a draw tube. Including the auxiliary objective, in case (fig. 2) with directions	60.—

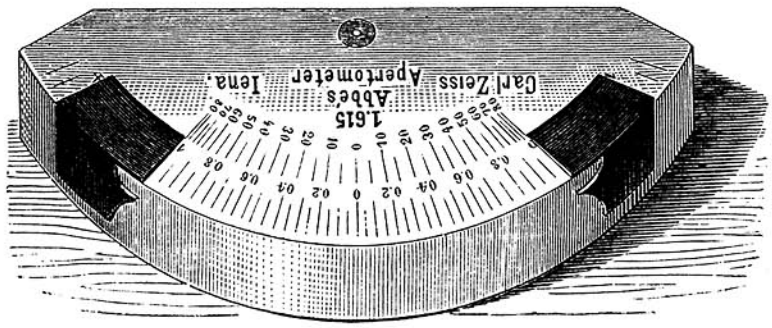

Fig. 2.
Apertometer.

2	***The same apparatus,** glass disc, mounted on metal plate with a slot for the adjustment of the indices	80.—

No.		*Marks*
3	***Test-plate** after ABBE — for testing the spherical and chromatic aberration of objectives, and for estimating the thickness of cover corresponding to the most perfect correction. Six cover-glasses, having the exact thickness	

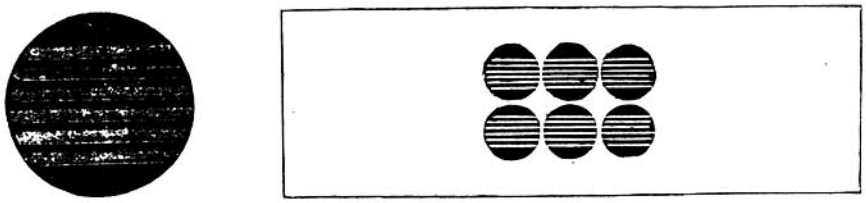

Fig. 3.
Test-plate No. 3.

	marked on each (0.09 to 0.24 mm), cemented in succession on a slip, their lower surface silvered and engraved with parallel lines, the contours of which form the test. For use with the ABBE Condenser (see Instruction for use). In case	10.—

Stands.

The general form of our stands, like most others of continental design, originated in the type first introduced by OBERHÄUSER and developed by HARTNACK. It is more or less universally admitted that the size and general arrangement of this kind of stand best corresponds to the requirements of scientific research. The extensive employment of the continental form even in English and American laboratories, as well as the testimony of numerous competent investigators, shows that, for scientific work at least, they are preferred even there to the more elaborate of the so-called English stands.

Latterly we have endeavoured to perfect the mechanical details of the microscope, and have made several improvements in the three main directions, which constitute the essentiality of the stand, viz. the stage arrangements, the means for focussing and the illumination.

A. The Stage.

The dimensions of the stage in all our stands (except in the Laboratory stands VI and VII) are sufficiently large to allow of any size slip or cultivation plate or dish being used.

The **stage** is provided with an **opening** of 33 mm ($1^5/_{16}$″) in the case of stands I to V, in order that the large field possessed by the objectives of long focus (including the projection lens of 70 mm) may be fully utilized. It may, however,

be reduced to the diameter of the upper lens of the condenser, by inserting a diaphragm provided for the purpose, in cases where very small slips are to be used.

The height of stage is in the case of stands II[a] to V reduced to the lowest limit which will admit of the adaption of the ABBE illuminating apparatus, in order that the hands may be supported by the table when manipulating on the stage. In the larger stands (I, I[a], photographic and mineralogical stands) the stage is made higher, to facilitate the employment of various methods of illumination other than by the ABBE illuminating apparatus, which are occasionally required.

Mechanism for moving the object is provided in I, I[a], II[a], the large BABUCHIN, photographic and mineralogical stands.

This consists of the following arrangements:

a) Revolution of the stage and body about the optic axis (stand I).

b) Revolving stage-plate with arrangement for centering (stands I[a], II[a], large BABUCHIN and mineralogical stands).

c) Mechanical stage (stand I[a] and stand for "photo-micrography"). The one adaptable to stand I[a] possesses the general arrangement of the English form of mechanical stage, and may be substituted in place of the rotating vulcanite stage-plate. The micrometer stage of the photo-micrographic stand is made for delicate adjustments of the object.

With stands I, II[a], IV, V and the "BABUCHIN stand" the "adaptable mechanical stage" recently constructed may be used; for very fine lateral movements Stage Screw-micrometer No. 31 may be used as a mechanical stage.

Mechanical stage movements were formerly peculiar to English microscopes and were rejected as objectionable by the majority of continental microscopists. It is only of late years that they have received more attention on the continent and for some years they have formed an object of experiment also in our works. We have arrived at the conclusion that mechanical movement of the object is of advantage in the following cases:

1. In the employment of high power lenses, when it is required to bring a point seen at the margin into the middle of the field. This, as is well known, when done by hand, is often a sore trial of patience. The small amount of movement necessary to accomplish this may be effected, to a certain extent, by the centering arrangement of the revolving stages of stands I[a] and II[a] (see above b).

2. For systematically searching a preparation.

3. For counting particles within a specified area of the surface of the object.

4. For registering certain spots in specimens in order to readily find them again.

5. For the projection of real images.

In cases 2 to 5 a mechanical stage like the one of stand I^a, or of the photomicrographic stand or the adaptable mechanical stage will be found a more or less indispensible adjunct. These are all so constructed as not to interfere in the least degree with any other manipulative process, and they may be retained in situ even when using pure-cultivation plates. We consider this to be a great improvement on the older form of mechanical stages, which must be removed from the stand during certain investigations with the instrument.

If the divided scales, with which the mechanical stages are provided, are to be used as means for refinding a particular spot of a specimen, the following points should be observed:

a) In the case of the mechanical stage of stand I^a care should be taken that in the interval between searching and refinding the centering screws should be left in an unaltered position.

b) The small adaptable stage should remain in a fixed position or should always be adapted to the stand in the same position (the small indentation produced by the fixing screw may be used for this purpose).

c) In both cases the slip should be accurately brought into its original position.

If it is desired to mark a specimen in such a manner that a particular spot may without difficulty be found by different observers using different instruments at different places, the best plan would be to mark any part of either the slip or the preparation itself in a conspicuous manner, say by means of a diamond cross, and to note the exact distance in both coordinates of the particular spot which is to be refound from that mark. The second observer will, in proceeding from this mark, have no difficulty in refinding the desired spot by means of his mechanical stage.

As a matter of course, a lower power should be used to refind a spot and bring it into the centre of the field previous to examinations with a high power lens.

B. The Adjustment of the Objectives.

The coarse adjustment. Whilst the coarse adjustment, in its form by means of sliding tube as retained in the cheaper stands V, VI and VII, has undergone scarcely any alteration since its introduction, the rack and pinion motion of all the other stands has already some years past been very considerably improved by us. We have constructed special machines for the accurate production of the (diagonal) gearing, and this motion is now made so perfect that objectives of medium power can be focussed by it alone without recourse being had to the micrometer screw.

The fine adjustment. This also has during the last years received our special attention. The result of our efforts is the *Micrometer movement of new construction now fitted in all our stands except No. IX. (For detailed description see Zeitschrift für wissenschaftliche Mikroskopie III, p. 207, 1886.) The superiority of this new arrangement is mainly due to the force exercised by the micrometer screw being transferred to the moveable limb by a single contact between hardened steel surfaces. This ensures an extremely delicate and uniform motion of the limb carrying the tube.

The divisions on the milled head of the micrometer screw in stands I—IV furnish a means for exactly registering the vertical movements of the tube. In the new stands each division corresponds to 0.01 mm elevation or depression of the tube in the direction of the optic axis.

By this means measurements of thickness may be made with some degree of accuracy. The upper and lower surfaces of the object are successively focussed and the amount read off on the milled head by the fixed index. In doing this it must be remembered to make both adjustments by a rotation of the screw in the same direction. The depth of layers of air is then equal to the difference between the two readings.

The thickness of layers of any other substances may also be measured by the same arrangement. **Estimation of the thickness of cover-glass** for instance is best done as follows: With a medium-power dry lens (D or E) and eye-piece 3 or 4, using central illumination focus the upper and lower surfaces of cover-glasses of exactly known thickness — e. g. the covers of an ABBE test-plate — and note the apparent thickness so obtained. A comparison of this with the known true value gives, once for all, the coefficient for reducing measurements, made with the same objective under precisely similar conditions, of any other covers to their true values. Roughly speaking this equals 3/2 or more exactly 1.52 (the refractive index of glass). The thickness of sections is estimated in a similar manner.

The medium tube length of our stands is 160 mm from the attachment of the objective to the upper end.

The draw-tube arrangement which is possessed by all stands with the exception of stand IX and the small stand for mineralogical purposes, admits of the tube-length being increased or diminished. With stands I to IV the length of the tube may be read off by means of a millimeter scale worked upon the tube. The lower end is tapped with the standard thread to take the auxiliary objective used with the apertometer.

The inner diameter of our draw-tubes is 23 mm at the upper end.

C. The Illumination of the Object.

The modern microscope is essentially constructed for illumination with transmitted light. Ordinary microscopic observation demands exclusively illumination by white (day or lamp) light without limitation of the field, but the incident pencil should be capable of wide variation as regards its angular aperture (wide or narrow illuminating cone) and its direction (central or oblique light). These requirements are fulfilled by the **ABBE Condenser**, first introduced by us in 1873 (MAX SCHULTZE's Archiv f. mikr. Anatomie IX, p. 413, 1873), and now so generally employed and so universally acknowledged as an indispensable accessory in advanced microscopic work, that it forms an essential adjunct to all stands intended for scientific research. For description vid. Nos 17 to 20 of this Catalogue.

To facilitate the **employment of the cylinder diaphragms**, which in our older stand necessitated the removal of the whole illuminating apparatus previous to their insertion, we have a few years ago made certain alterations in the mechanical arrangement of the ABBE illuminating apparatus, which, at the same time, render the frame of the apparatus available for the adaptation of other illuminators, such as the special ones described in Nos 20—23.

All the large and medium size stands are supplied in solid mahogany upright cases. This form is admittedly much the more convenient and certainly deserves preference to the flat cases, as it allows of the instrument being taken out and replaced without risk of any of its fittings being thereby deranged. The size is reduced as much as possible for the sake of compactness, but sufficient room is provided for the instrument with its objectives (and nose-piece) and eye-piece in situ and for an ample assortment of objectives, eye-pieces and usual accessory apparatus.

Stands VI, VII and IX are supplied, as in former years, in flat mahogany cases.

The cases are furnished with the following appendages:

Metal name plates, including engraving, to screw on the door, M. 5.—.

Leather travelling cases according to size M. 18.— to 30.—.

The ordinary cases are included in the price of the stand. Cases of particular design, walnut, ebony etc., are supplied at proportionate extra charges.

Specification and Price of the various Stands.

A. Large Stands.

No.		*Marks*
4	**Stand I.** Inclinable from strictly vertical into strictly horizontal position and fixable in any inclined position by a clamping lever; square vulcanite stage 100×100 mm (4″×4″), stage and body admitting of rotation about the optic axis. Coarse adjustment by rack and pinion, fine adjustment by micrometer screw with divided head. Draw-tube with millimeter scale. ABBE illuminating apparatus No. 17 with rack and pinion adjustment. Iris diaphragm of the newest construction (with full aperture). Condenser system of 1.40 apert. interchangeable with cylinder diaphragm which may be added at an extra charge of **M. 7.—** at any time (fig. 4)	**300.—**

The prices of stands do not include any optical or mechanical parts beyond those enumerated in the above specification. Suitable combinations are compiled at the end of the catalogue.

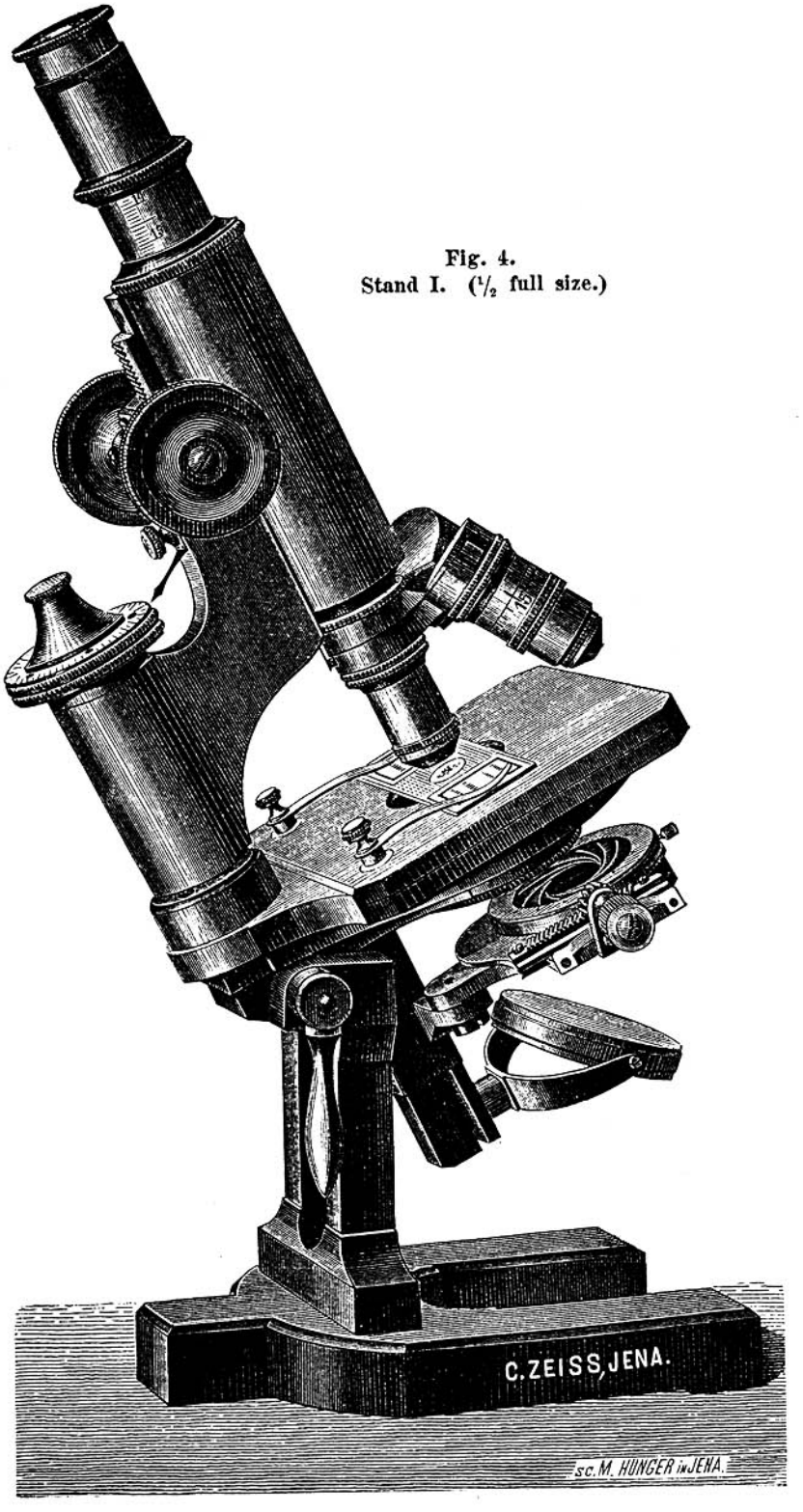

Fig. 4.
Stand I. ($^1/_2$ full size.)

No.		*Marks*
5	**Stand I[a].** Stage with rotating vulcanite disk of abt. $4^3/_4''$ dia. (120 mm), which is removable and can at any time be replaced by the mechanical stage (Price **M. 100.**—) described below. The rotating disk may be accurately centered by means of two milled-head screws. This adjustment also serves to give slight motion to the object in the absence of the mechanical stage.	
	In all other respects exactly as stand I (Fig. 5).	
	Without mechanical stage	300.—
	With mechanical stage and rotating vulcanite disk . . .	400.—
	For our mechanical stages we claim the following advantages not possessed by those made by others in former years:	
	1. They permit of the use of slips of any size. Cultivation plates or dishes may be placed upon the stage by removing the clips and milled heads, which is very easily done.	
	2. They are provided with two vernier scales, admitting of the position of a point being read within a $^1/_{10}$ mm. When using this arrangement the slip should always be pushed against the projection at the left hand of the object holder, so that it always occupies the same position in relation to the movable slide of the stage. The divisions can be used for measurements, if the accuracy required does not exceed 0.10 mm.	
	3. The stage is available with any method of illumination.	
	Attachment of the mechanical stage is effected in the simplest manner by loosening the centering screws, compressing the counter-spring, removing the rotating disc and substituting the former by the reversed manipulation.	

The prices of stands do not include any optical or mechanical parts beyond those enumerated in the above specification. Suitable combinations are compiled at the end of the catalogue.

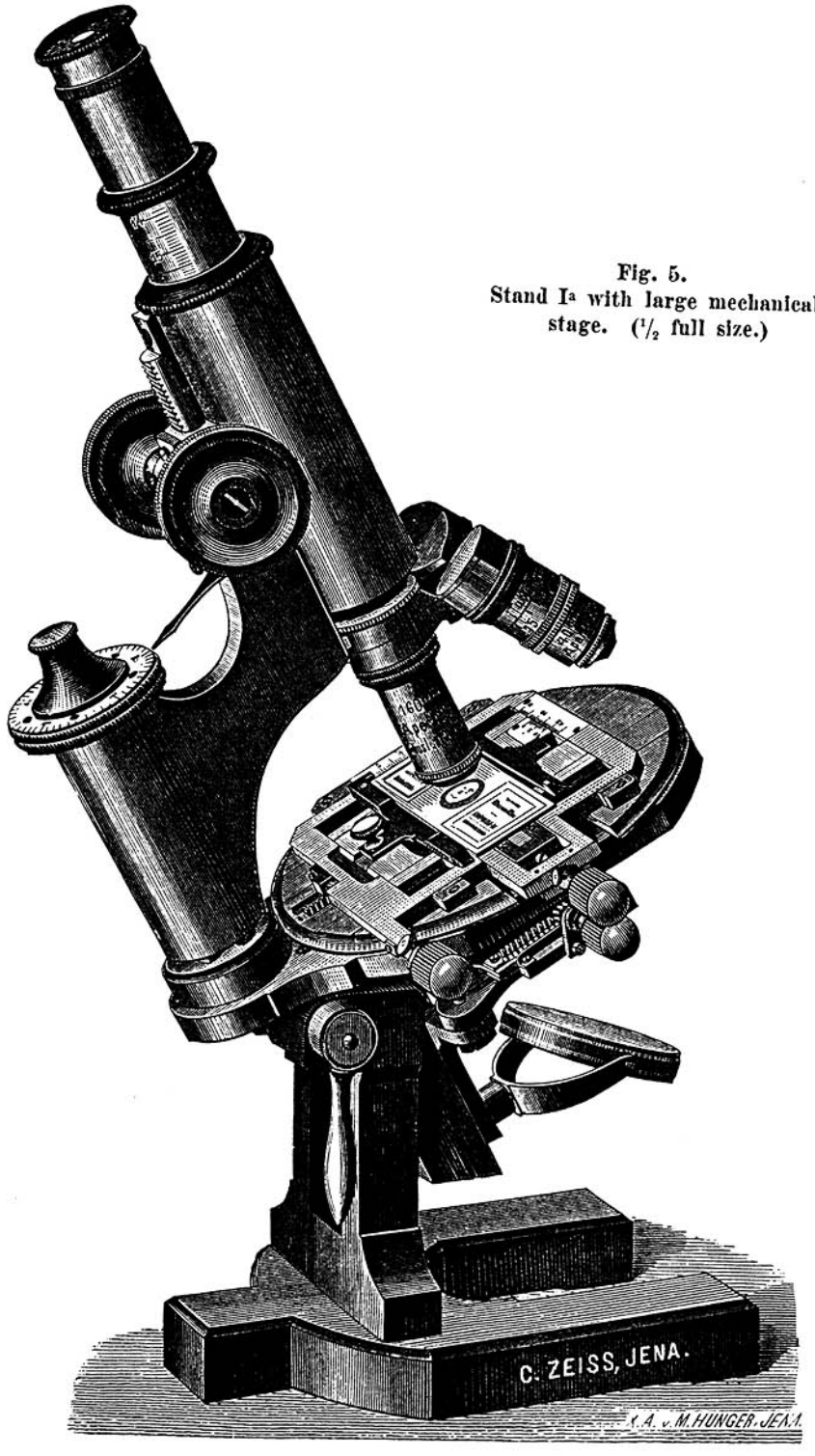

Fig. 5.
Stand Ia with large mechanical stage. (1/2 full size.)

No.		Marks
6	**Stand for Photo-micrography.** Square stage, 100×100mm, (4″×4″), with mechanical stage for imparting delicate movements to the object-slide, which may be of any size (incl. cultivation plates). Body very short and of great diameter, so that photographic objectives of very long focus (projection system 70 mm) may be used within it. In all other respects similar to stands I and Ia. **This stand may, with good advantage, be used for usual ocular observation.** For the purposes of photo-micrography it is advisable — and for all advanced work necessary — to substitute for the usual condenser of 1.40 aperture the achromatic centering condenser of 1.0 aperture, price **M. 75.**— (No. 20). This condenser may, naturally, be used for ocular observation as well. The mechanical stage of the above stand is constructed with a view to imparting such a very slow motion to the object as the projection of a magnified image at a great distance necessitates. Whilst the revolution of the object is effected in the ordinary way by turn-table rotated by rack and pinion, the cross motions are obtained by two sliding-pieces mounted at right angles to one another and actuated by micrometer screws. Vernier reading to 0.10 mm as in stand Ia. With ABBE illuminating apparatus No. 17 with ordinary (non-achromatic) condenser of 1.40 apert.	350.—
	Achromatic centering condenser No. 20	75.—
	Or id. non-centering and without iris-diaphragm, interchangeable with the usual condenser	45.—

The prices of stands do not include any optical or mechanical parts beyond those enumerated in the above specification. Suitable combinations are compiled at the end of the catalogue.

Fig. 6.
Stand for Photo-micrography.
($^1/_2$ full size.)

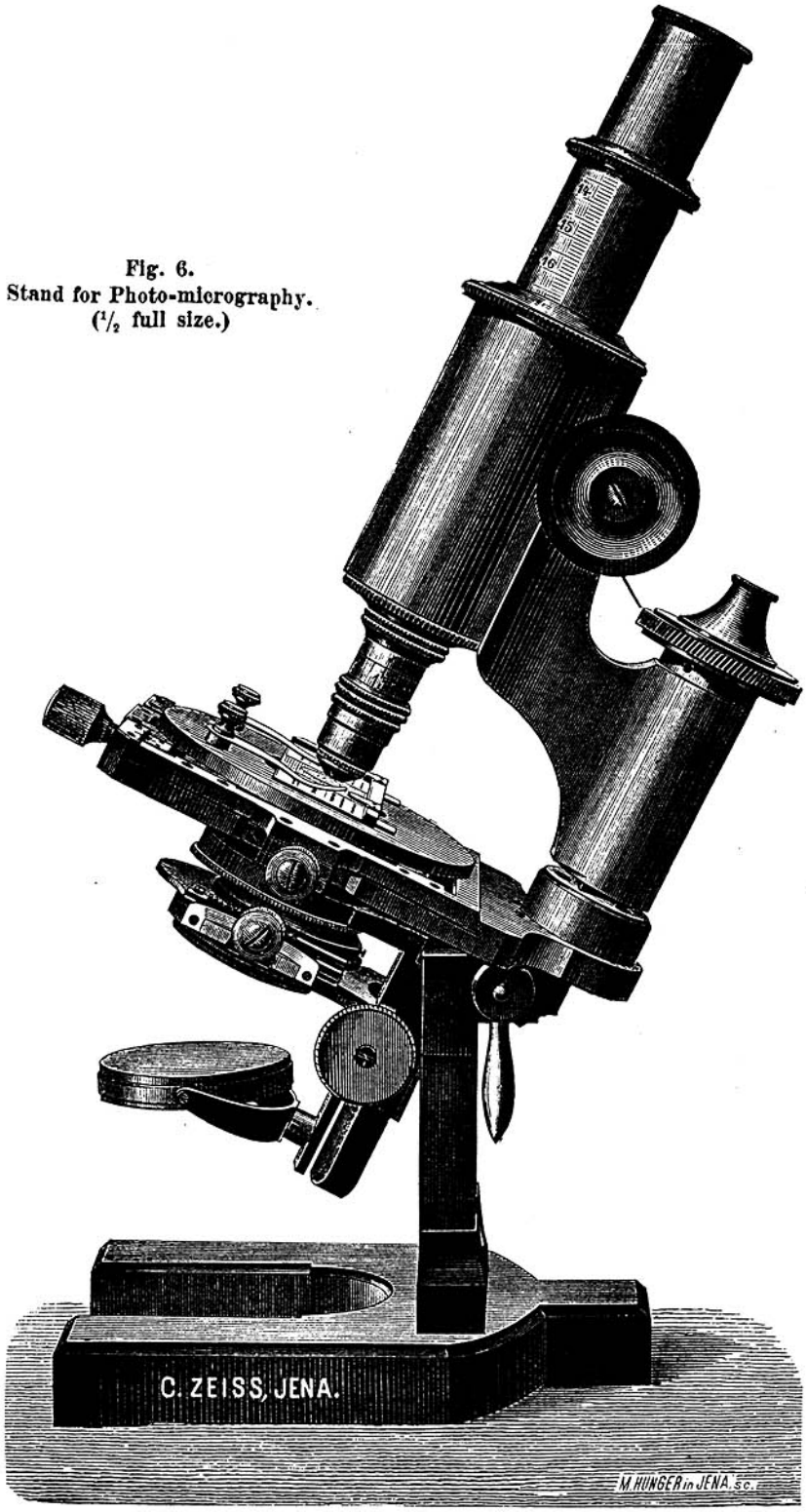

B. Stands of Medium Size.

No.		*Marks*
7	**Stand IIa** similar to Ia, stage with revolving vulcanite disc of 100 mm (4″) diameter, which is centered by two milled-head screws and counter-spring and, within small limits, can be used as a fine stage movement. Coarse and fine adjustments as in the preceding instruments. ABBE illuminating apparatus No. 17 with iris diaphragm and condenser system of 1.40 num. apert. (fig. 7)	290.—

The prices of stands do not include any optical or mechanical parts beyond those enumerated in the above specification. Suitable combinations are compiled at the end of the catalogue.

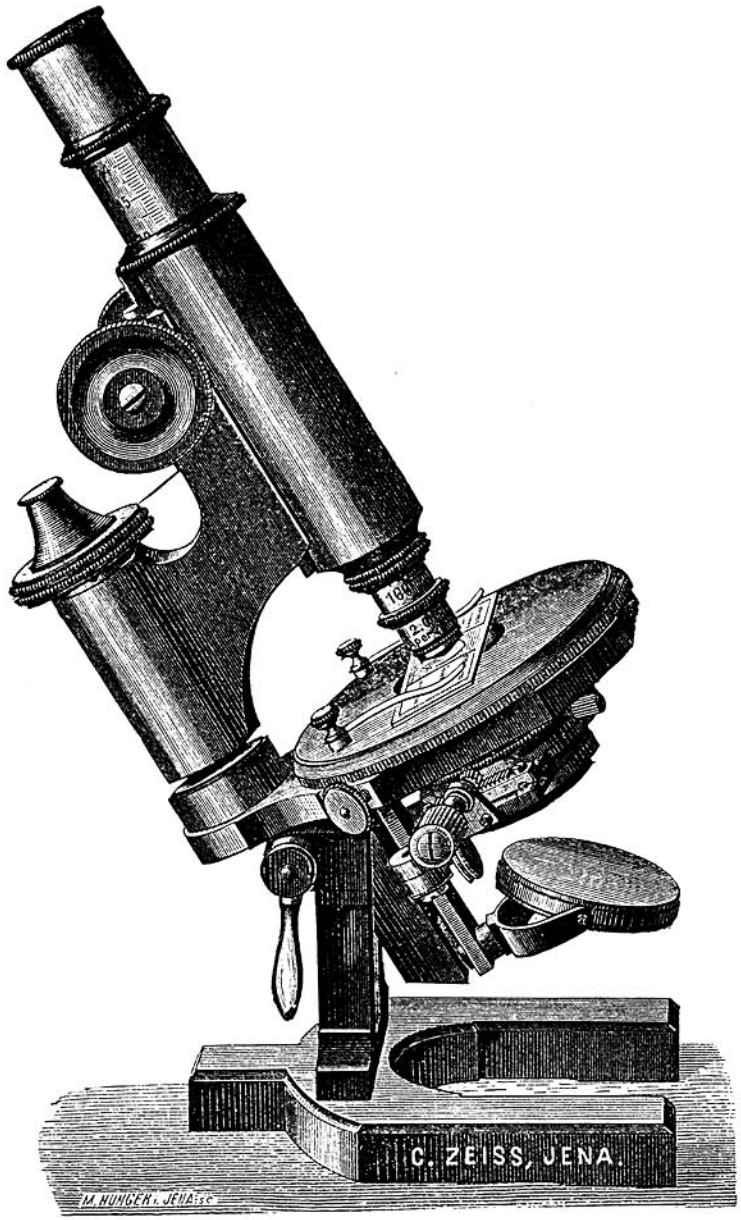

Fig. 7.
Stand IIa. (1/2 full size.)

No.		*Marks*
8	**Stand IV^{a}.** Inclinable, with outclamping lever. Fixed stage, 90×90^{mm} ($3^{1}/_{2} \times 3^{1}/_{2}''$). Coarse and fine adjustments as above. ABBE illuminating apparatus No. 17 with condenser system of 1.20^{num} apert. Cylinder diaphragm to fit in place of the condenser (**M.** 7.—). Without iris diaphragm, which, however, can be added at an extra charge of **M.** 15.— at any time (fig. 8).	**200.—**
9	**Stand IV^{b}** similar to IV^{a} but without illuminating apparatus. This is replaced by the ordinary plane and concave mirror with universal motions and the ordinary cylinder diaphragm which is fixed to the under surface of the stage by a bayonet joint. This arrangement permits of a rapid interchange of the diaphragm for the simplified ABBE illuminator No. 18, price **M.** 40.—, (condenser system of 1.20 num. apert. with fixed iris diaphragm)	**150.—**
	Stand IV^{b} incl. illuminating apparatus No. 18	**190.—**

The prices of stands do not include any optical or mechanical parts beyond those enumerated in the above specification. Suitable combinations are compiled at the end of the catalogue.

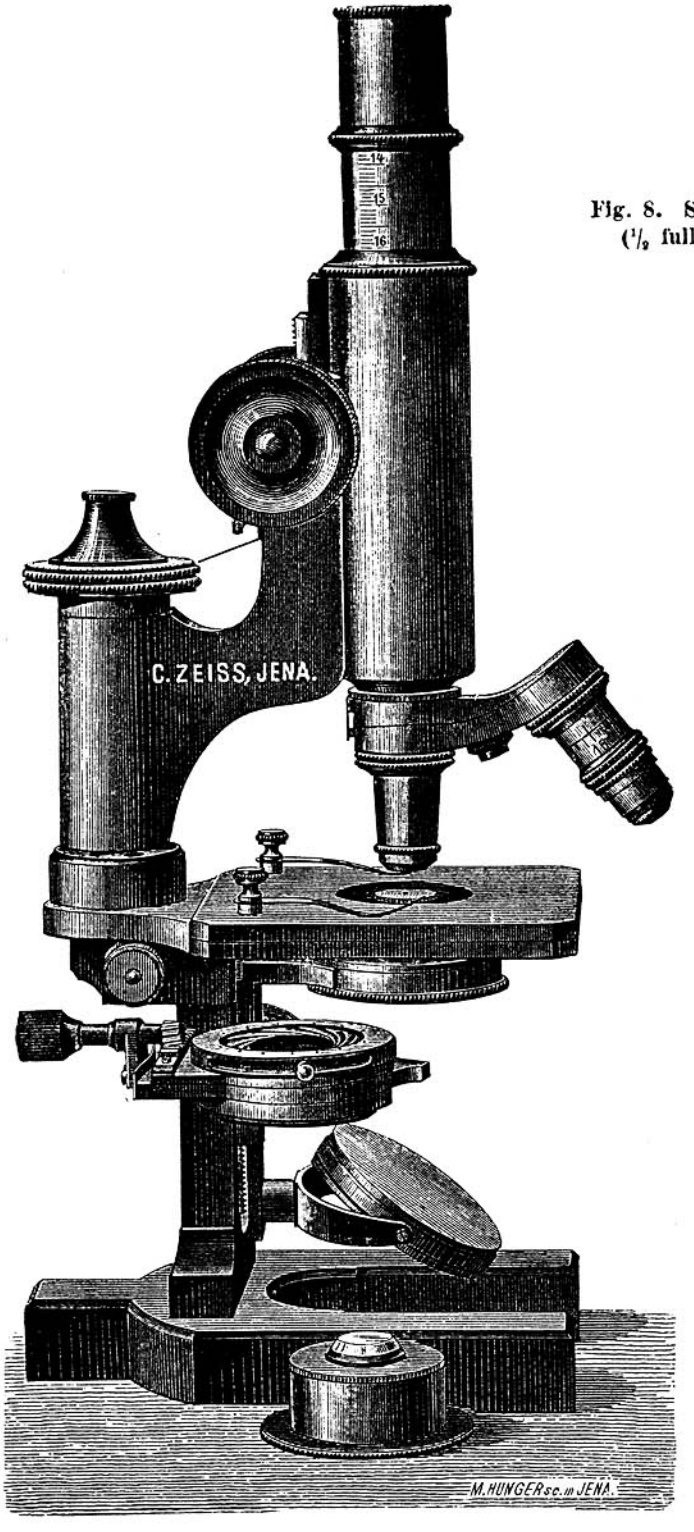

Fig. 8. Stand IV^a.
($^1/_2$ full size.)

No.		Marks
10	**Stand V^a.** Inclinable, fixed stage 90 × 90^{mm} (3$^1/_2$ × 3$^1/_2$"). Coarse adjustment by sliding tube. Fine adjustment by micrometer screw. The lower body of the instrument, including the ABBE illuminating apparatus, identical to that of stand IV^a (without iris diaphragm which may be added at any time at an extra charge of M. 15.—). (Fig. 9)	120.—
11	**Stand V^b.** Similar to the above, but without the ABBE illuminating apparatus. Other arrangements as in stand IV^b . . .	95.—
	Stand V^b with illuminator No. 18	135.—
12	**Babuchin Stand.** This instrument, made after the design of Prof. BABUCHIN of Moscow, is included in the series of our stands as it possesses several novel features of practical value which cannot be combined in the ordinary form of stand. These are substantially as follows: 1. The ABBE illuminating apparatus is constructed in a manner resembling that adopted by NACHET. The condenser system mounted in a sleeve may be inserted from above in the carrier which can be screwed downwards and swung out to the left. By these means the condenser system is easily changed for another of different aperture, or for a cylinder diaphragm or polariser. 2. Below the condenser carrier is a sliding piece admitting of a rotation about the optic axis, in which the iris diaphragm may be inserted and placed in any excentric position for oblique illumination. 3. The illuminating apparatus is moved along the optic axis, not, as is generally the case, by rack and pinion, but by a screw fitted to the under side of the stage on the left hand, which gives	

The prices of stands do not include any optical or mechanical parts beyond those enumerated in the above specification. Suitable combinations are compiled at the end of the catalogue.

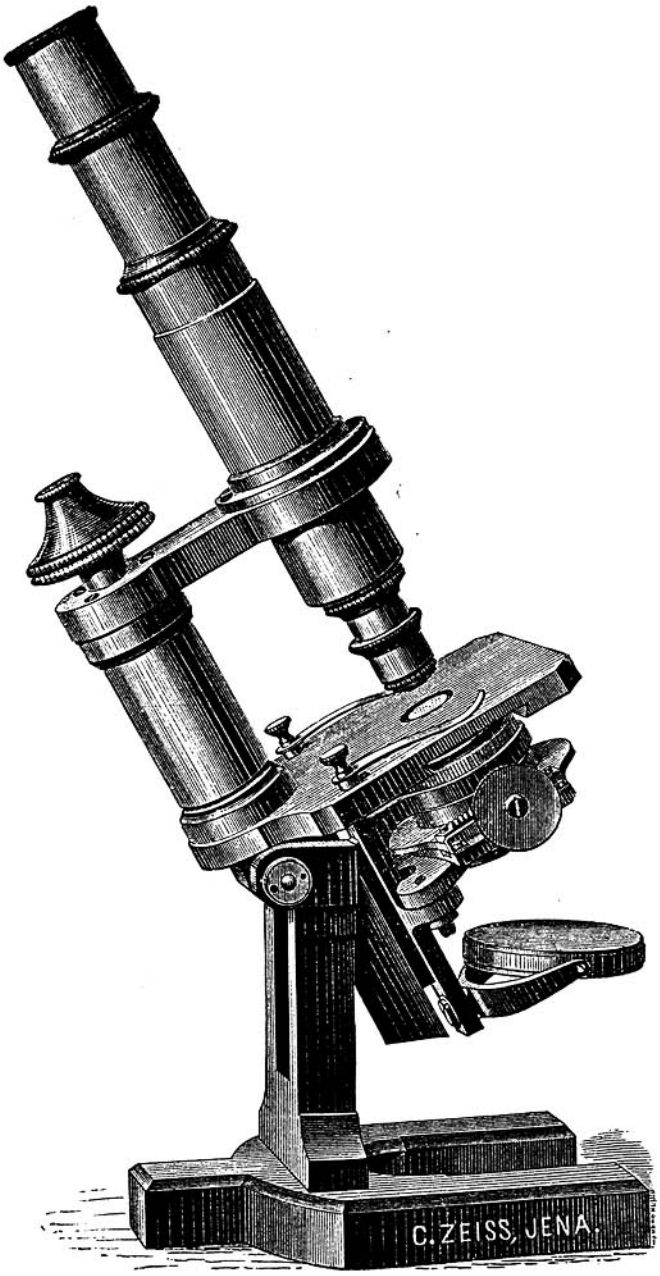

Fig. 9.
Stand V^{a}. ($^{1}/_{2}$ full size.)

No. | *Marks*

a slow and more delicate motion. When the screw has been turned until the condenser has reached the lowest point, a further turn of the screw causes it to turn out automatically to the left, in which position the condenser system can be changed or centered.

A specially large mirror fixed to a sliding holder allows of a wide range of up and down movement, and, when the condenser is swung outward, can be placed in any oblique position.

The condenser has an aperture of 1.40.

In accordance with the wishes of Prof. BABUCHIN we make two models of this stand.

a) **Large BABUCHIN Stand,** with rotating and centering stage (similar to stand II^{a}). The whole body of the stand is attached by a hinge joint to a prism-shaped pillar sliding in an outer tube, so that it can be withdrawn and fixed by a clamping screw. This arrangement admits of a compact form being given to the instrument and of an increase to the height of the stage and stand generally, should this be required for the application of a photographic camera, the insertion of some larger substage apparatus etc.

The height of the stand may be thus varied from a minimum of about 200 ^{mm}, with a body-length of 160 ^{mm}, to a maximum of 230 ^{mm}; that of the stage from 105 to 135 ^{mm}. — This stand is fitted with the new micrometer fine adjustment (fig. 10) . . . **320.—**

b) **"Student's Microscope"** after BABUCHIN — which has the same upper body as its predecessor; it is, however, not inclinable, does not admit of the variation of the height of the stage and is provided with a somewhat simplified illuminating apparatus, which does not allow of the iris diaphragm supplied with the stand being rotated or placed in an oblique position; it is, however, provided with a condenser of 1.40 aperture . . . **200.—**

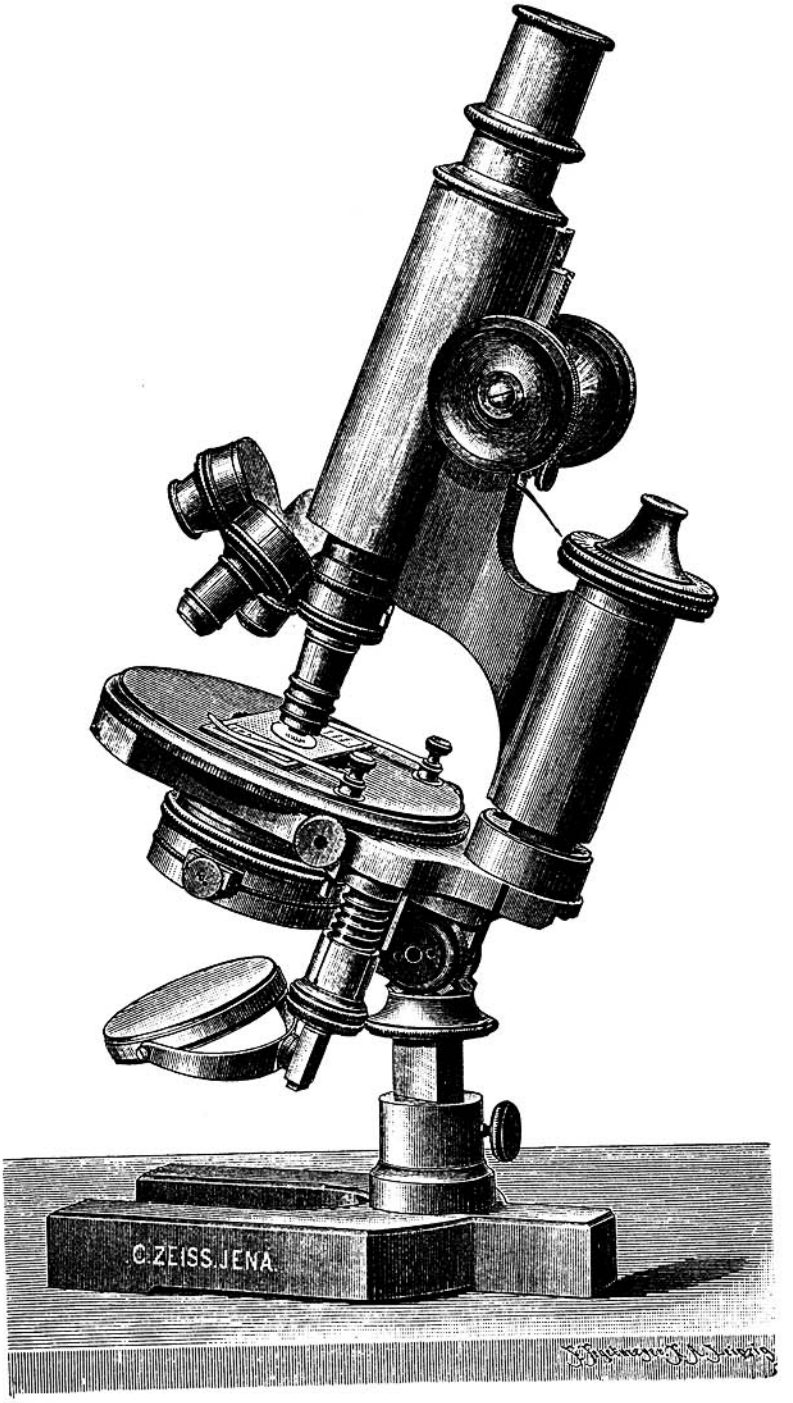

Fig. 10.
Babuchin Model Stand. (1/2 full size.)

C. Small Stands.

No.		Marks
13	**Stand VI.** Fixed stage 60 × 70 mm ($2^1/_2 \times 2^3/_4$"). Illumination by plane and concave mirrors with universal motion. Cylinder diaphragm with jacket fitted to the under surface of the stage by a bayonet joint; easily removed when very oblique light is required. This arrangement also permits of the illuminator No. 19 (of about 1,0 num. apert.) being inserted in place of the diaphragm. Coarse adjustment by sliding tube. Tube fitted with draw-tube. Fine adjustment by micrometer screw of new construction. This stand is made to incline (fig. 11)	65.—
14	**Stand VII.** In all respects as stand VI but not inclinable. Substantially built for laboratory use. (Illuminator No. 19 applicable as in stand VI). (Fig. 12.)	60.—
	The extreme care exercised in the construction of the micrometer adjustment of stands VI and VII renders them available for use with the highest dry powers. For immersion systems these stands cannot fairly be expected to be rigid enough, though, if particular care be taken even these lenses may be used in exceptional cases. **Stands V, VI and VII cannot be subsequently fitted with rack and pinion adjustment in lieu of the draw-tube arrangement.** All those who do wish to spend a certain sum in making a first purchase with the intention of later on adding an immersion lens without having to undergo any extra-expenses occasioned by deficiencies in the stand, are therefore strongly advised to select one of the larger stands, viz. at least IV^b.	

The prices of stands do not include any optical or mechanical parts beyond those enumerated in the above specification. Suitable combinations are compiled at the end of the catalogue.

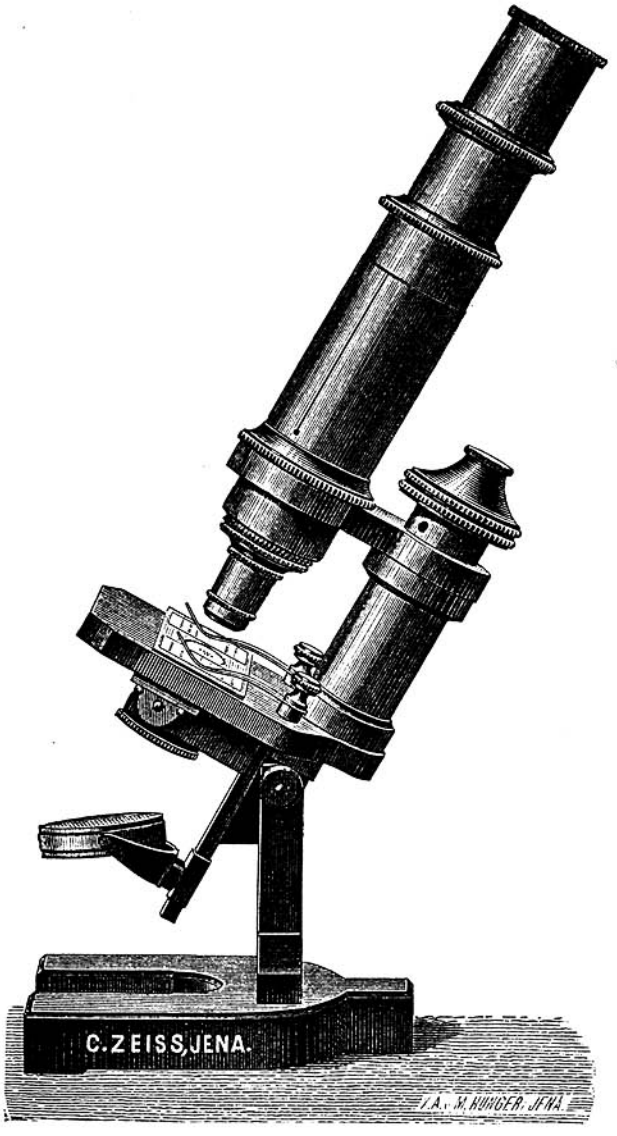

Fig. 11.
Stand VI.

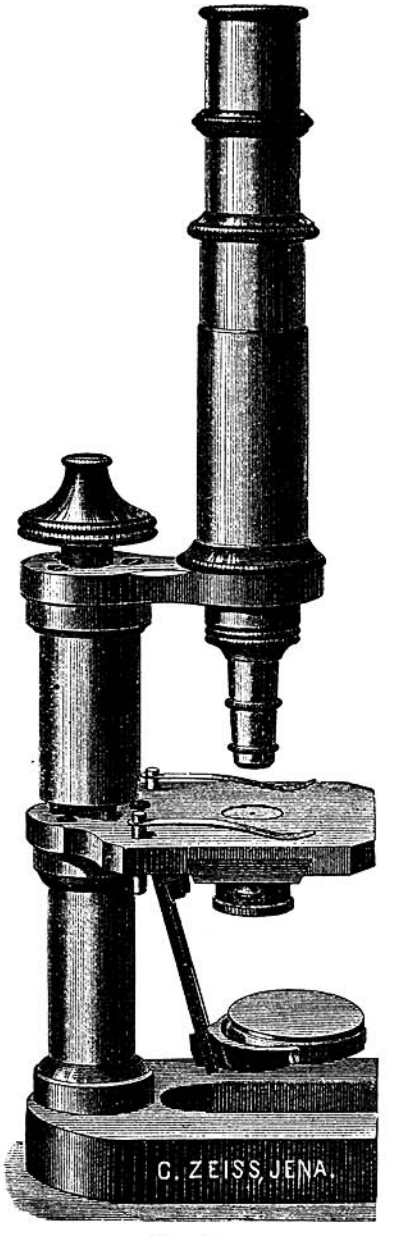

Fig. 12.
Stand VII.

(Half size)

No.		Marks

When using a revolving nose-piece with these smaller stands a clamping ring (**M. 5.—**) will be found convenient; this prevents the tube from sliding down in consequence of the weight of the nose-piece and the objectives attached thereto.

The sliding objective-changer No. 25 is not applicable to stands VI and VII, owing to the small distance between the tube and the stage.

15 **Stand IX.** Simple stand for laboratory and technical purposes.

Plain large stage of 100 mm (4″) dia. with large aperture, which may be decreased if required by dropping in a diaphragm.

Large plane and concave mirrors.

Adjustment by rack and pinion, the construction of which still admits, however, of the use of medium powers (C, D). (Fig. 13.) 40.—

Recommended by Prof. JOHNE (Veterinary School, Dresden) for the detection of Trichina (à **M. 70.—** incl. objective and eye-pieces).



Fig. 14. Hand Microscope.

16 **Hand Microscope** for demonstration in classes. Stage with clips to hold the specimen; sliding tube, which after adjustment is securely fixed by a clamping ring. Fine adjustment may be effected by altering the position of the eye-piece. In use it is directed by hand towards a window or lamp. Available even with objective D. Without objective, eye-piece and case (fig. 14) . . 15.—

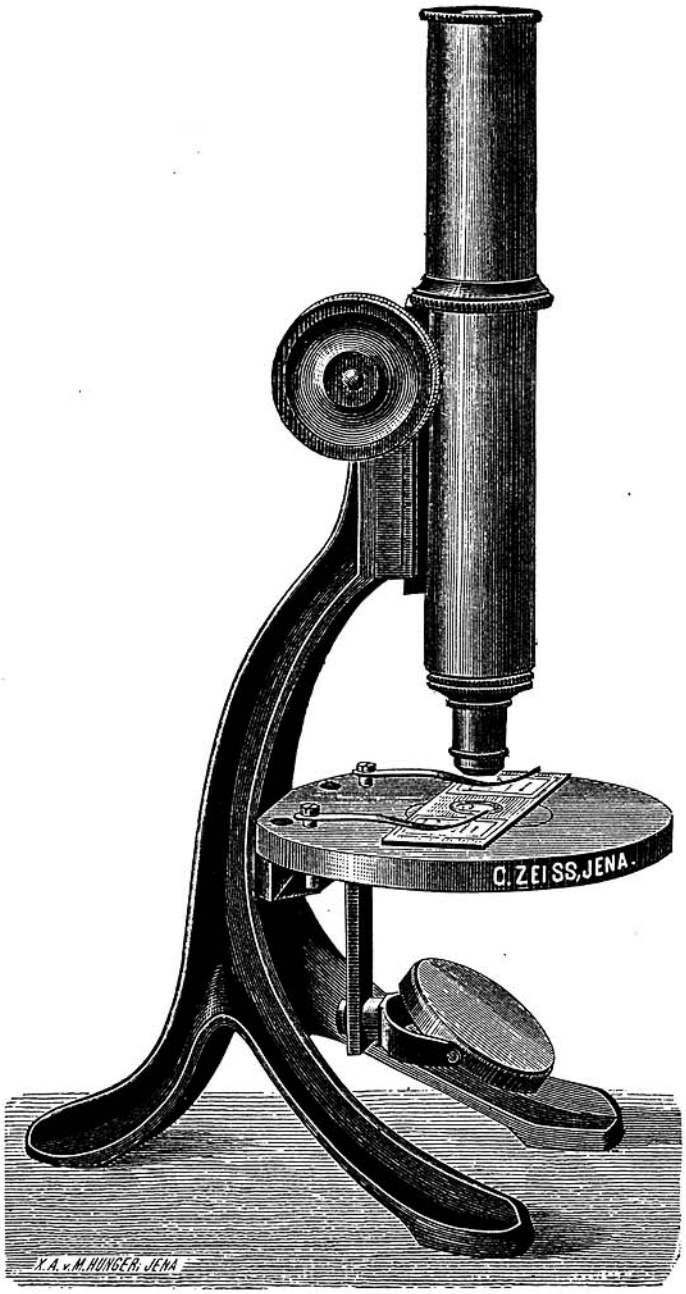

Fig. 13.
Stand IX.

Stands for crystallographic and petrological researches.

No. | *Marks*

A. Large Stand (fig. 15).

Similar to stands I and I^a in form and size.

Horse-shoe base; inclinable body.

Coarse adjustment by rack and pinion *G*.

Fine adjustment by means of micrometer screw with divided head *M*.

ABBE illuminating apparatus, adjustable by rack and pinion *W* with condenser system *C* of 1.40 aperture mounted in sleeve and interchangeable for cylinder diaphragm (**Mk. 7.—**) or any of the apparatus No. 20—23. Diaphragm carrier with iris diaphragm, adapted for insertion of central stop diaphragms, mica and selenite films or polariser (Nicol) *P*; arranged to admit of rotation about the optic axis, of being placed obliquely and of being entirely swung out of the axis round the pivot *f* (vid. fig. 16).

Rotating stage with divided circle at circumference and cross-lines at right angles to one another.

The draw-tube is provided with a mm-scale and separately adjustable by means of rack and pinion *g* and carries at its lower extremity an AMICI (BERTRAND) lens *B*, which may be inserted through an opening in the outer tube; at the upper end it is fitted with a divided circle for polariscopic measurements. The tube is provided at its lower end with BIOT-KEIN'S quartz plate *K* and centering arrangement *c c* for the objectives.

With condenser of 1.40 ap., iris diaphragm, polariser, analyser, KLEIN'S quartz plate and AMICI lens. **550.—**

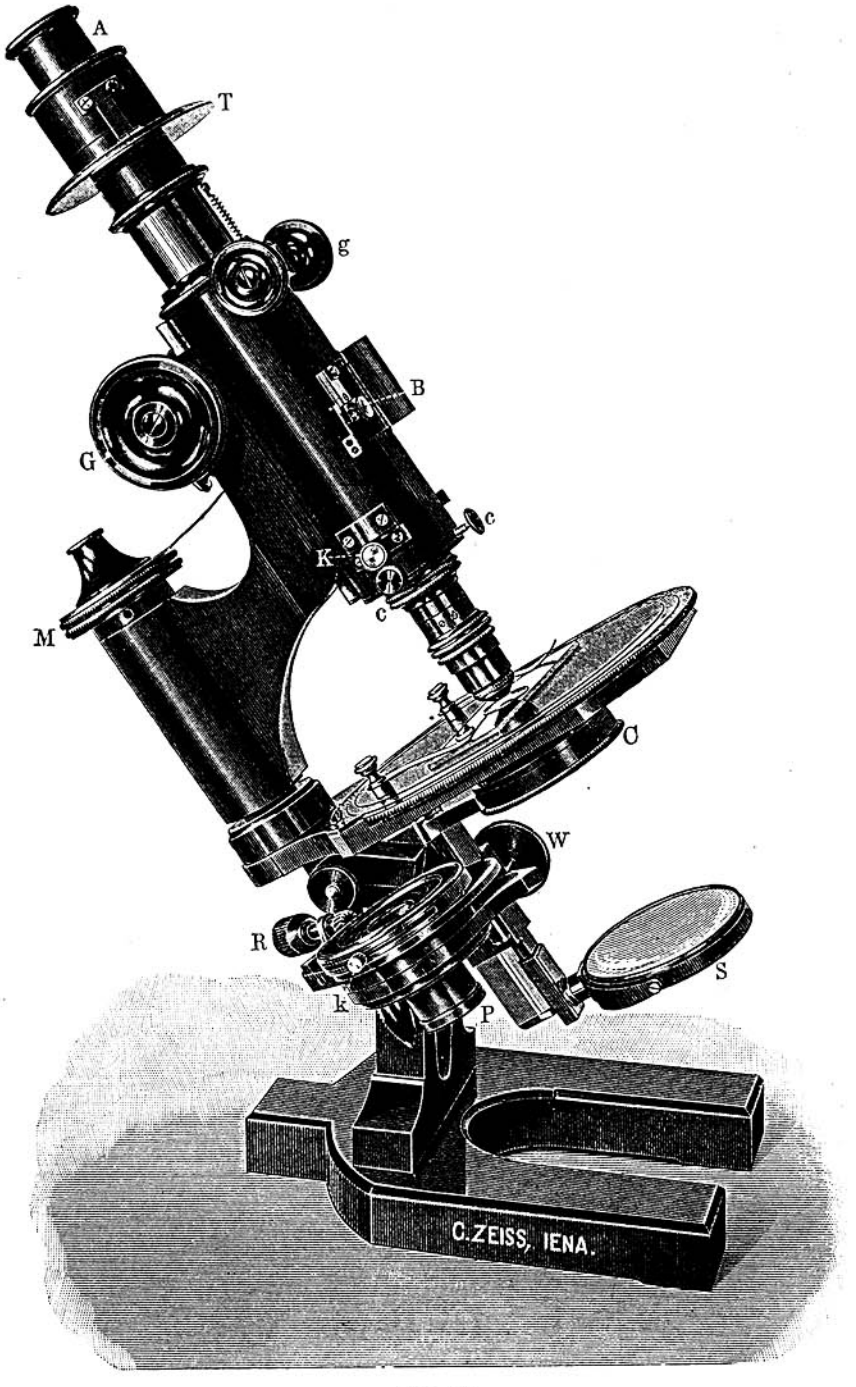

Fig. 15.
Large Mineralogical Stand (half size).

No.		*Marks*
	B. Medium Stand (fig. 16).	
	This stand is similar to the preceding one, but smaller in size, which corresponds with that of our stand IV. It is inclinable, is fitted with the same arrangement of the illuminating apparatus, the stage, the coarse and fine adjustment of tube, the fittings for KLEIN's quartz plate and the analyser, and has the same centering objective-holder. It is, however, adapted for the eye-piece No. 50 for the observation of axial images and is supplied without the AMICI lens.	
	With condenser, polariser, analyser, KLEIN's quartz plate .	**350.—**
	The following special illuminating apparatus may be used with these two stands, viz:	
	No. 21, **Illuminating apparatus** for monochromatic light after HARTNACK	**80.—**
	No. 22, **Micro-spectral objective** after ENGELMANN . . .	**124.—**
	No. 23, **Spectro-polariser** after ROLLET	**240.—**
	These may by means of the centering collar supplied with them be fixed and adjusted in the sleeve of the condenser system by the observer.	

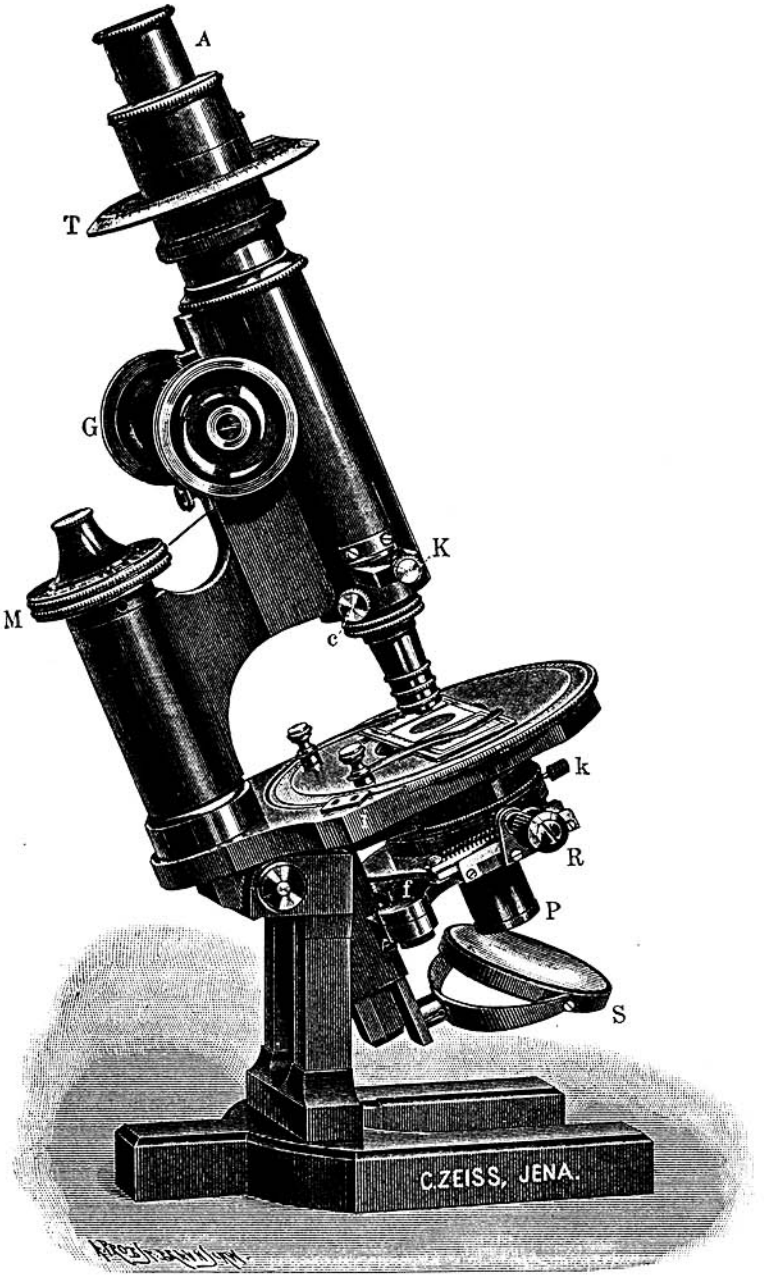

Fig. 16.
Mineralogical Stand. Medium size ($^1/_2$ full size).

No. | *Marks*

C. Small Stand (fig. 17).

This stand is in form and size similar to the tripod stand IX. Not inclinable. The polariser is mounted together with a condenser of 1.0 aperture in a sleeve and may be rotated about the optic axis by means of the lever *a*. After having drawn the polariser down within the sleeve a short distance (so as to bring the condenser under the underside of the stage), it may be swung out of the optic axis by means of the lever *b*. The polariser may also be entirely withdrawn and substituted by the ordinary condenser or a cylinder diaphragm, but none of the special illuminating apparatus adaptable to the two stands A and B can be used with this stand.

The large double mirror (plane and concave) is movable in all directions and can be easily withdrawn as in the larger stands.

The stage is arranged to rotate and is provided with a divided circle.

The tube is fitted with rack and pinion adjustment *G*. This mechanism is, however, so carefully fitted that by its means even the medium powers (C, D) may be conveniently focussed. The upper end of the tube is fitted with a divided circle *T* for analyser *A* and the lower part with the centering collar *cc*, KLEIN's Quartz-plate *K* and a small shutter to close the aperture occupied by the quartzplate when this is not being used.

With polariser, condenser system, analyser and KLEIN's quartz plate . . . . . 180.—

Condenser-system of 1.0 ap., without polariser, with small iris diaphragm . . . . . 22.—

Cylinder diaphragm . . . . . 7.—

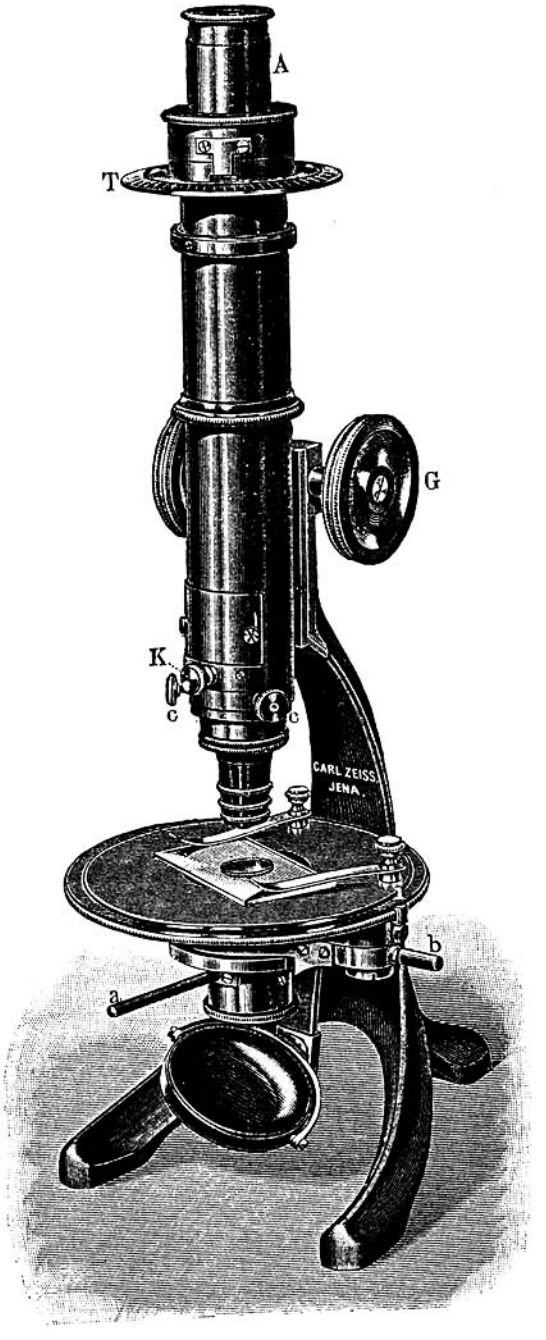

Fig. 17.
Mineralogical Stand. Small size (1/2 full size).

No.		Marks
	We supply the following	
	Accessories and auxiliary apparatus for petrological researches.	
	Huyghenian eye-pieces 1 to 5 with crossed lines . . ea	10.—
	BERTRAND'S eye-piece (with quadruple quartz plate) . . .	35.—
	Stauroscopic plate	7.—
	Micrometer eye-piece No. 28	15.—
	Screw-micrometer eye-piece No. 30	60.—
	Goniometer eye-piece No. 40.	30.—
	Eye-piece for the observation of axial images No. 50 (for the medium and small stand)	30.—
	Spectroscopic eye-piece No. 53	165.—
	Micro-spectro-photometer after ENGELMANN No. 54 . . .	480.—
	ABBE camerae No. 43 and 44 . . . . . **M. 30.**— and	42.—
	Set of 8 selenite and mica films after MOHL	10.—
	Respecting the appliances for photo-micrography and for the projection of objects in general and of axial images in particular we refer to pag. 92.	
	Analyser for projection (made to screw to the projection eye-pieces)	20.—

Illuminating Apparatus.

A. For white light.

No.		*Marks*
17	* **Illuminating Apparatus** after ABBE (new arrangement). The essential feature of this is a condenser system of short focus, which collects the light reflected by the mirror into a cone of rays of very large aperture and projects it on the object. The full aperture of the illuminating cone should only be used when finely granular and deeply stained particles (bacteria) are being examined with objectives of large aperture. In every other case the cone must be reduced to suitable dimensions either by an iris diaphragm (see below) or common diaphragm (central illumination). On placing the diaphragm excentrically, by means of the rack work attached to the carrier, the central rays are excluded, and a certain extra-axial portion of the illuminating pencil falls upon the object (oblique light). When the diaphragm is thus excentrically placed this oblique pencil can be directed from all azimuths by rotating the carrier round the optic axis. The central stop diaphragm shuts off all the axial and transmits only the marginal rays (dark-ground illumination; see special instructions).	

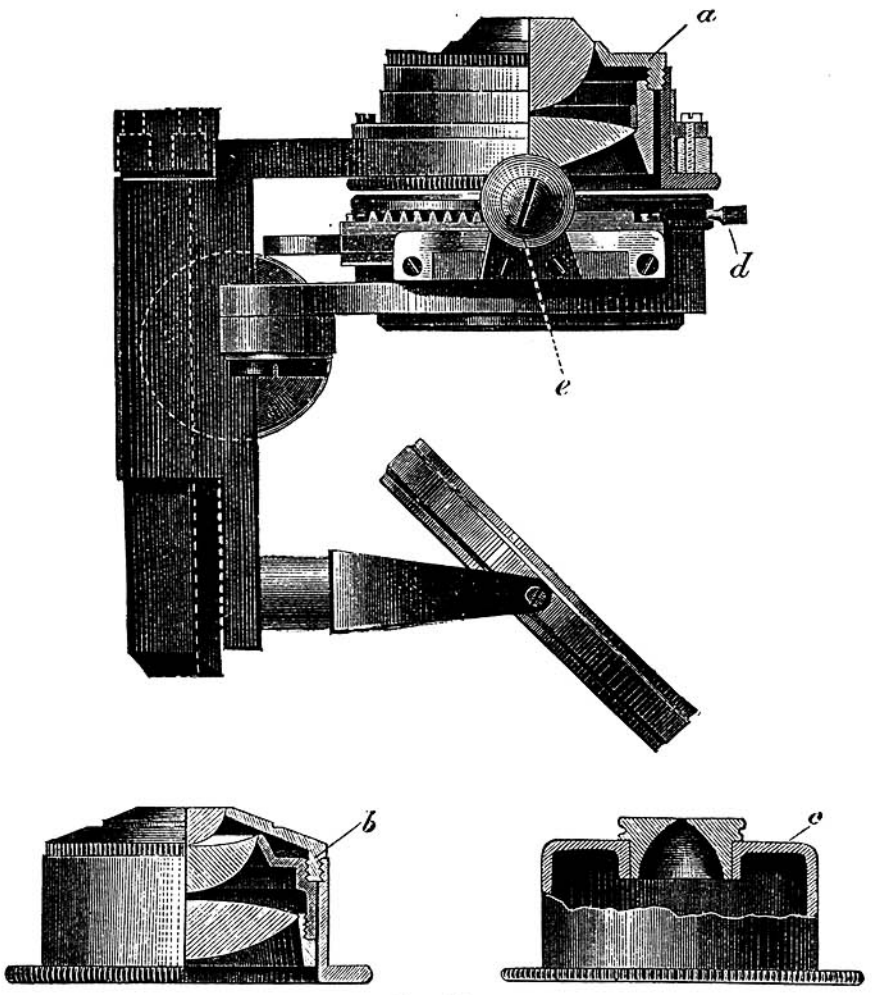

Fig. 18.

Abbe illuminating apparatus.

a) Condenser system of 1.20 num. apert., *b*) condenser system of 1.40 num. apert., *c*) cylinder diaphragm, *d*) iris diaphragm, *e*) milled head for throwing the diaphragms out of centre.

No.		*Marks*
	The **Condenser system** — made as before in two forms, a) a double combination of 1.20 num. apert., and b) a triple combination of 1.40 num. apert., is mounted in a holder which fits a sprung jacket on the apparatus. This arrangement facilitates an interchange of the two condenser systems, and also serves to carry the following apparatus when the condenser is not used: c) the ordinary cylinder diaphragm;	

No. | *Marks*

d) the illuminating appliances described under Nos 20—23.

The centering collars required for the adjustment of the illuminators 20 to 23 are now supplied with these and are included in their prices.

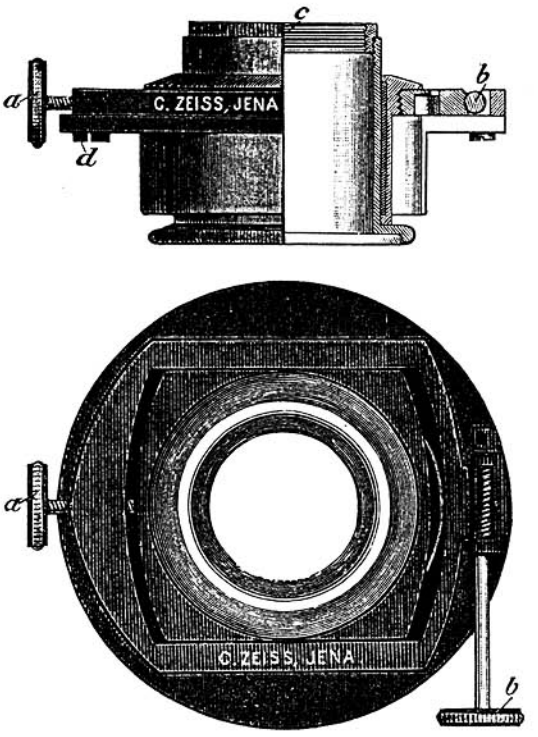

Fig. 19.
Centering Collar.

e) centering collar for accurately adjusting achromatic or apochromatic objectives used as illuminators in photo-micrography.

As most of these appliances require adjustment to the plane of the object, every ABBE illuminator now made is fitted with rack and pinion for adjustment in the direction of the optic axis. Every microscope fitted with it may, therefore, be used in conjunction with any other form of illuminator which may be required.

No. | *Marks*

f) The iris diaphragm (fig. 20), which is now included in the ABBE illuminator, is a very convenient substitute for the ordinary interchangeable diaphragms, as it affords a ready means of gradually increasing or diminishing the aperture with the greatest precision. Smallest aperture about 0.5^{mm}, largest — in the newest form — equal to the full aperture of the condenser system, so that it may remain in situ when either the central spot diaphragm or polariser is in use.

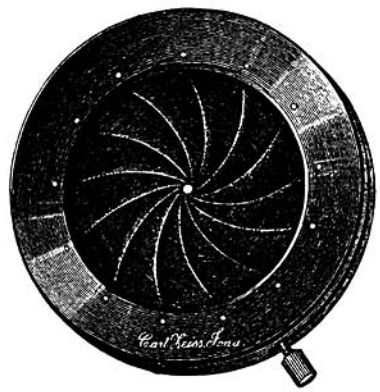

Fig. 20.
Iris diaphragm.

The iris diaphragm may readily be adapted at any time to any of our recent stands provided with the large ABBE illuminating apparatus (i. e. I to V^{a}). It is only necessary to remove for this purpose the small screw which fixes an annular cap upon the diaphragm carrier and, after removing this cap, to insert in its place the iris diaphragm, which may then be fixed by means of that small screw.

We do not supply the large ABBE illuminating apparatus in a detached state, as in most cases considerable trouble and annoyance is caused by having it fitted to stands of a different make, it being besides in many cases an utter impossibility to do so.

Our own stands, from I to IV^{a} and V^{a} are fitted with this apparatus, viz stands I, I^{a}, II^{a} and the "photo-micrographic" stand with a condenser system of 1.40 num. apert. and iris

No.		Marks
	diaphragm; stands IV[a] and V[a] with a condenser system of 1.20 apert. but without iris diaphragm. The cylinder diaphragm for these stands will, in future, only be supplied if specially ordered and charged for separately. It is gauged to exactly fit in all cases the sleeve of the condenser system.	
	The following separate parts of the illuminating apparatus No. 17 may be supplied singly:	
	a) The double condenser system of 1.20 apert.	20.—
	b) The triple „ „ of 1.40 apert.	25.—
	Both fixed in their mounts without jacket; with jacket the price is Mk. 5.— more.	
	c) The cylinder diaphragm — cylinder with three stops . .	7.—
	d) Nos 20 to 23	
	e) Centering collar	20.—
	f) Iris diaphragm	15.—
18	***Simplified Illuminating Apparatus** for the stands IV[b] and V[b]. Condenser system of 1.20 num. apert. with iris diaphragm (not adjustable excentrically); giving, therefore, central illumination in any degree, but not oblique. Fitting the sleeve fixed at the underside of the stage of the stands IV[b] and V[b], having simply to be substituted for the cylinder diaphragm . .	40.—
19	***Illuminating Apparatus** for the stands VI and VII. Condenser of 1.0 num. apert. to be inserted in place of the cylinder diaphragm. Without diaphragms. The gradation of the (central) illuminating cone is effected by sliding the system in its jacket	10.—
	(Small) iris diaphragm for the illuminator No. 19.	12.—
	Numbers 18 and 19 may be ordered at any time by possessors of the corresponding stands, as they are made to fit these without any alteration. For fitting an iris diaphragm subsequently ordered to a condenser No. 19 it will be necessary to have the latter sent to us.	

No. | *Marks*

20 **Centering achromatic condenser.** Specially adapted for the requirements of photo-micrography, viz for projecting a sharp image of the source of light in the plane of the object.

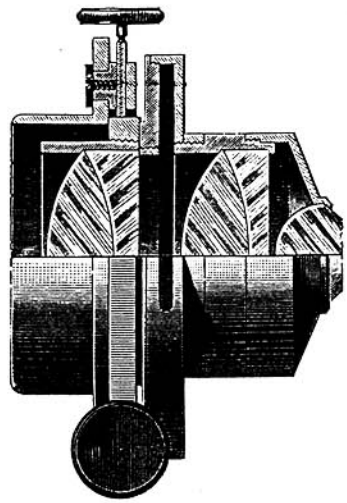

Fig. 21.
Centering achromatic condenser.

Achromatic condenser of 1.0 num. apert. with iris diaphragm and centering adjustment. Made to fit the sleeve of the ABBE illuminating apparatus into which it may be inserted in place of the ordinary (non-achromatic) system (No. 17 a or b). Focussing effected by means of the rack and pinion adjustment of the ABBE illuminating apparatus . . . . . 75.—

20a **Achromatic Condenser** without centering adjustment and also without iris diaphragm. Similarly adaptable as No. 20, but to be used with the stops forming part of the diaphragm carriers 45.—

B. Illuminating apparatus for spectroscopically decomposed light.

No. | *Marks*

When it is required to illuminate a portion of an object in the field of the microscope with a single pure spectral colour or to observe the effect of the whole spectrum upon it, or finally to study the effects of the spectrum of polarised light, the instruments Nos 21, 22 or 23 have to be used. These are connected to the ABBE illuminator by the centering collar supplied with each instrument (vid. fig. 23, p. 64) and adjusted to the object plane by the rack and pinion motion of the illuminator. All three instruments necessitate, unless used with either stand I or I^a, an inclined position of the stand.

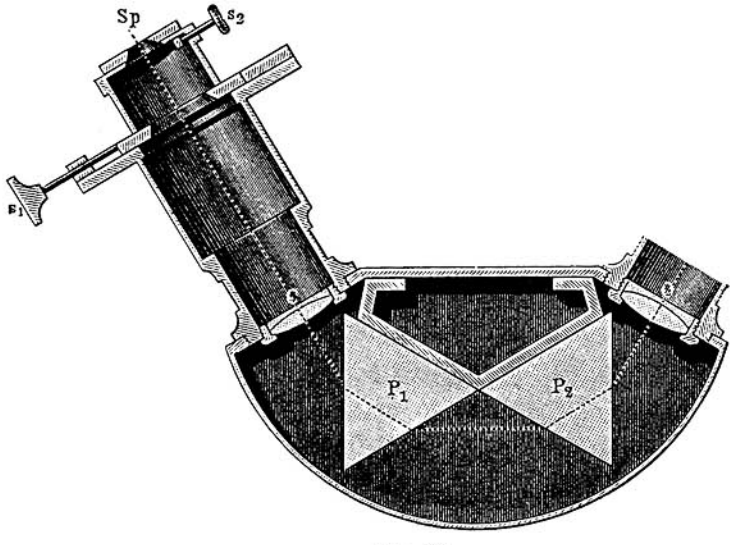

Fig. 22.
Illuminating apparatus für monochromatic light.

21 **Illuminating apparatus for monochromatic light** after HARTNACK. The light which emerges from the slit *Sp* is rendered parallel by means of the collimator lens *C*, is then spectrally decomposed and projected upon the specimen by means of the projection objective *O*. The spectrum is sufficiently extended to ensure approximately uniform monochromatic illumination with higher powers. By adjusting the position of the slit by means of

No.		*Marks*
	screw s_1 the various colours of the spectrum may be made to successively traverse the field of vision. The screw s_2 serves to regulate the width of the slit	80.—

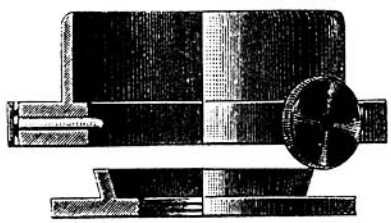

Fig. 23.
Centering collar for the instruments Nos 21, 22 and 23.

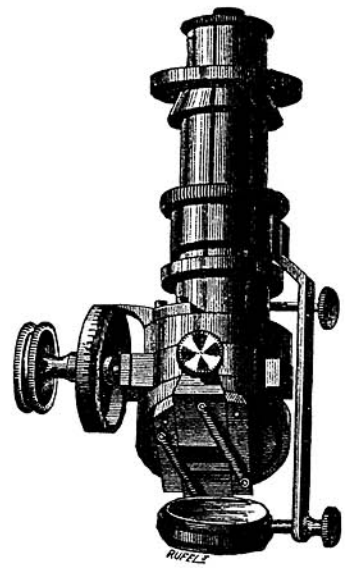

Fig. 24.
Micro-spectral Objective.

22	* **Micro-spectral Objective after ENGELMANN**, for observing and measuring the effect of the colours of the spectrum on microscopical objects (Botanische Zeitung 1882, No. 26; PFLÜGER'S Archiv, Bd. XXVII, p. 464, Bd. XXIX, p. 415). Slit mechanism, collimator lens, AMICI prism and projection objective are combined in a tube about 77 mm in length, which fits below the stage concentrically with the axis of the microscope so as to project a real spectrum upon the preparation under observation. The edges of the slit are moved symmetrically by a screw with right and left hand threads, so that the middle of the slit remains stationary; the divided head of the screw indicates the width of the slit as adjusted in 100 ths of a millimeter; the length of the slit may be regulated on both sides by two slides acted upon by screws. — Ordinary objectives are used for projecting the spectrum, viz, according to the desired size of the spectrum, either A, B, C or D, which by the narrow gauge thread of the lens mounts may be screwed to the instrument just above the AMICI prism. (Fig. 24.)	124.—

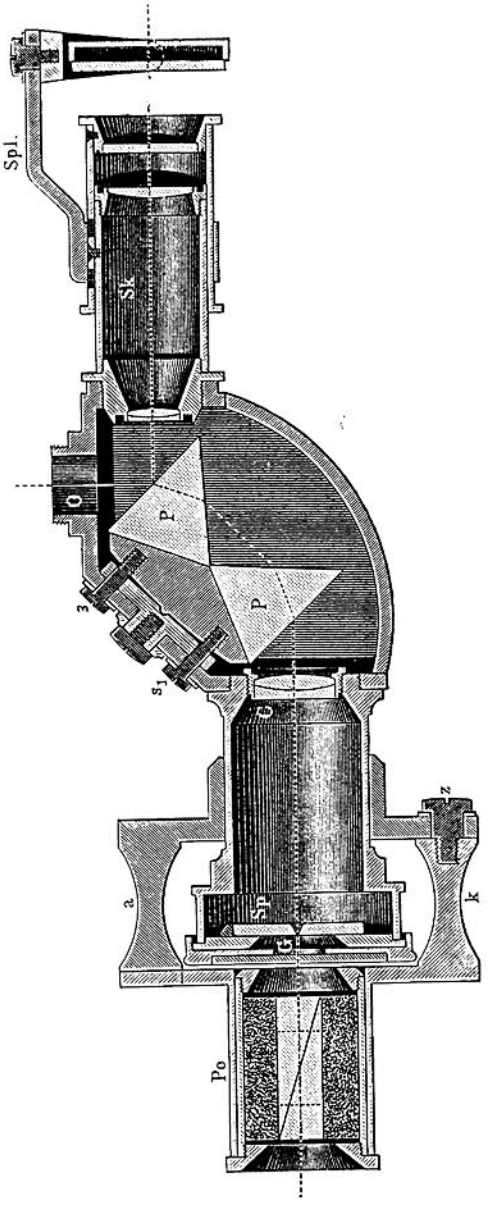

Fig. 25.
Spectro-Polariser.

No.		Marks
23	***Spectro-Polariser** after ROLLETT (Zeitschrift für Instrumentenkunde, Jahrg. I, p. 366) as modified by DIPPEL, for determining the character of double refraction in microscopical specimens for particular wave lengths. Combination of two flint-glass prisms *PP*, arranged to produce a deviation of 90°, having on one side a movable slit *Sp* and a collimator lens *C*, on the other (at *O*) a microscope objective which, from below, projects a real spectrum on the specimen under observation. Scale tube *Sk* on the prism casing, with mirror, collimator lens and a scale divided and numbered according to the wave lengths; by reflexion from one surface of the prism a real image of this scale is projected together with the spectrum into the plane of the object. The edges of the slit are moved symmetrically by a double threaded screw so that the centre-line of the slit remains stationary. A PRAZMOWSKI prism *Po* mounted on a movable arm *k* in front of the slit serves as a polariser, and between it and the slit is a revolving ring *G* serving to receive selenite films for producing interference lines in the spectrum. An A, B, C or D objective is used to project a spectrum of the desired dimension and is screwed to the prism case by the narrow gauge thread on the lens mount. (Fig. 25.) This apparatus is arranged to connect with the frame of the ABBE illuminating apparatus by means of the centering adjustment supplied with the former. The adjustment in a vertical direction is effected by means of the rack and pinion, while the transverse adjustment of the spectrum is obtained by the centering collar. Including two selenite films for red of the second and third order	240.—

Appliances for changing the Objectives on the Stand.

No.		*Marks*
	These contrivances are required to satisfy two conditions: 1) that the image should not disappear on changing the objectives, so that only a touch of the micrometer screw is necessary for perfect adjustment, and 2) that the centering should be good, i. e. that the same spot in the specimen remains in the field after changing the lens. The first condition is satisfied by adjusting the lengths of the funnels of the objectives which are required to be interchangeable in such a manner that on changing them their foci may lie at a corresponding distance from the plane of the object [1]). The second condition can only be realised in the ordinary "revolving" nose-piece if this is specially adjusted for the particular objectives intended for use with it. It is impossible, therefore, to be answerable for the exact centering of nose-pieces subsequently supplied. To avoid this inconvenience we have lately constructed the Sliding Objective-changer (see below) which possesses special means for centering and can, therefore, be adapted to any objective.	

) This applies to the achromatic lenses A to F on the one hand, the apochromatic lenses 16 mm to 3 mm (ap. 0.95) on the other. Lens a_1 cannot be used with any objective-changer; objectives a_2, a_3, a and aa can be used with objective-changers on those of our stands which are fitted with rack and pinion adjustment.

No.		*Marks*
24	**Revolving Nose-pieces.**	
	a) Revolving nose-piece for 2 objectives. (Fig. 26.) . . .	20.—



Fig. 26.



Fig. 27.

Revolving Nose-pieces.

	b) Revolving nose-piece for 3 objectives. (Fig. 27.) . . .	27.—
	c) Revolving nose-piece for 4 objectives	35.—
25	***Sliding Objective-changer.** This apparatus is so arranged that each individual objective can be centered and it permits the use of any number of glasses. (Fig. 28 and 29.)	

It consists of:

a) The tube-slide. This is screwed on the end of the body like an ordinary nose-piece with the slide opening towards the front. The plane of the sliding motion is not made at right angles to the optic axis but inclined at a small angle to it.

b) The objective-slide. The plane of the slide is inclined to the axis at an angle corresponding to that of the tube-slide, so that the objective rises on being withdrawn and cannot damage the specimen. At one end of this fitting is a screw turned by a watch-key which acts as a stop in bringing the objective always back to the same position and also serves as a centering adjustment in the direction of the slide, while the adjustment in the transverse direction is effected by a similar screw working at right angles to the first.

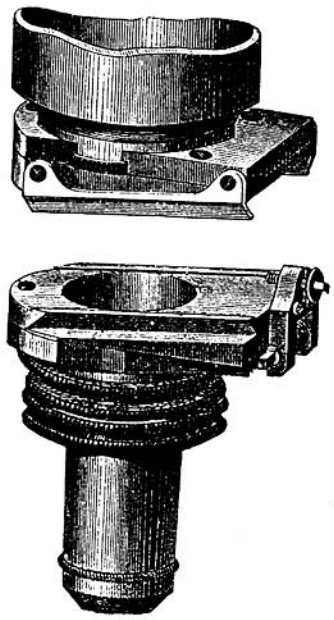

Fig. 28.

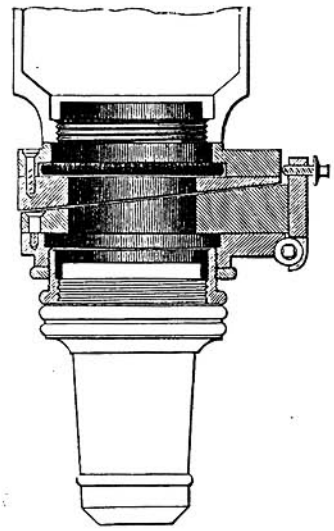

Fig. 29.

Sliding Objective-changer.

No.		*Marks*
	Objectives whose settings are so matched that they are approximately in focus when changed can, by means of the clamping screw on the objective slide, be focussed accurately and then fixed once for all in their proper position. The two pieces fit one another accurately; any number may be supplied with the tube-slide in the first instance or subsequently.	
	On changing the objectives with a properly adjusted changer the same part of the object always occupies the field, the object being so nearly in focus that only a slight adjustment by the micrometer screw is necessary.	
	Tube-slide	10.—
	Objective-slides, each	10.—
	We supply special cases for these changers, viz:	
	a) Case for 3 objective-slides	4.—
	b) „ „ 6 „ „	7.—

Apparatus for measuring and counting microscopical objects.

A. Measuring Apparatus.

No.		*Marks*
	With regard to measurement of the thickness of microscopical objects see p. 29.	
	The following instruments are intended for measuring the length and breadth of microscopical objects.	
26	**Stage Micrometer.**	
	a) One millimeter divided into 100 parts; mounted on a glass slip, in case	10.—
	b) Ten millimeters, the last being divided in tenths . . .	6.—
	These serve merely as standards of known value for determining the micrometer value of the measuring instruments proper.	
	Other divisions on application.	
	Vide also Nos 36—38.	
	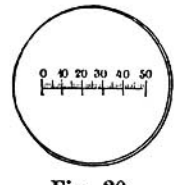	
	Fig. 30. **Eye-piece Micrometer.**	
27	**Eye-piece Micrometer.** Arbitrary divisions on a glass disc to drop into the eye-piece; for measuring the magnified image of	

No.		Marks
	an object; the real value of the divisions must, therefore, for exact measurements, be determined by means of the stage micrometer for each pair of objective and eye-piece at definite tube lengths. Approximate values, sufficiently accurate for ordinary purposes, are given in a table supplied with our micrometer eye-pieces. (Fig. 30.)	5.—
	The following instruments are provided with this micrometer.	
28	**Micrometer Eye-piece for ordinary objectives.** Huyghenian eye-piece (2 or 3 as desired) with adjustable eye-lens for exact adjustment of the micrometer scale to the eye of the observer; with table of the micrometer values of the divisions. (Fig. 31), incl. micrometer	15.—

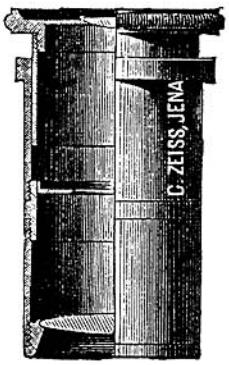

Fig. 31.
Micrometer Eye-piece.

28a	**Id.** Micrometer movable laterally by means of a screw	30.—
28b	**Id.** With movable index in lieu of the micrometer . . .	26.—
	The micrometer disc or the index — which is fixed to a ring and may be procured singly at **Mk. 1.—** are supplied in small ivory capsules together with the eye-pieces. The tube of the eye-piece consists of two parts and may be screwed asunder, the line of	

No. | *Marks*

division being just above the diaphragm. Upon this diaphragm the ring with pointer or the micrometer-disc, as the case may be, should be placed, the latter in such a position that the figures appear erect, and then the two parts screwed together.

29 ***Micrometer Eye-piece for the apochromatic objectives.**

Compensating eye-piece 6 with $^1/_1$ micron divisions. The divisions in this eye-piece are so computed that the value of one interval (with a body-length of 160 mm) for each apochromatic objective equals just as many micra μ, (0,001 mm), as there are millimeters in its focal length, i. e.

Apochromatic lens:	16.0 mm	8.0 mm	4.0 mm	3.0 mm	2.5 mm	2.0 mm	1.5 mm
Value of interval:	16 μ	8 μ	4 μ	3 μ	2.5 μ	2 μ	1.5 μ.

A table of values is, therefore, superfluous for this eye-piece, as they are indicated by the designation of the objectives themselves . . . . . 30.—

29a ***Id.** Micrometer scale laterally adjustable by means of a screw . . . . . 45.—

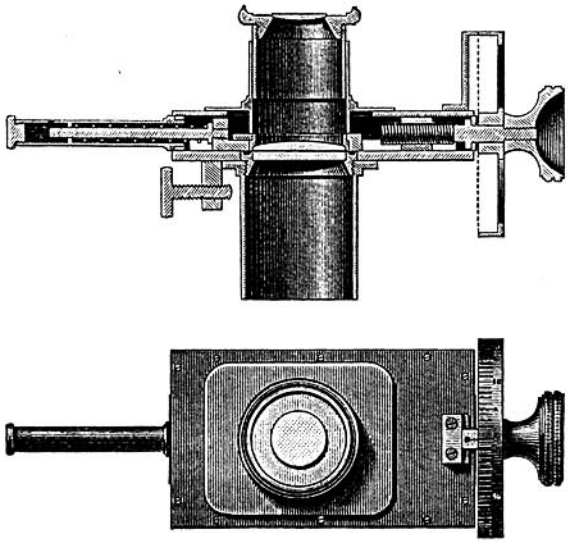

Fig. 32.
Screw Micrometer Eye-piece.

No.		Marks
29b	***Id.** With movable index in lieu of micrometer scale . .	41.—
30	**Screw Micrometer Eye-piece.** For such exact measurements of objects which occupy a large portion of the field and cannot, therefore, be measured with sufficient accuracy by means of the ordinary micrometer eye-piece. RAMSDEN eye-piece; glass-plate with crossed lines which are moved across the field by means of the micrometer screw. — Each interval of the divided drum corresponds to 0.002 millimeters of the image. Complete revolutions of the drum are counted by means of a figured scale in the field. With the aid of this instrument up to 4 mm may be measured across the image formed by the objective. (Fig. 32.)	60.—
30a	**Id.** fitted with compensating eye-piece in lieu of the RAMSDEN eye-piece; for use with apochromatic lenses	80.—
31	**Stage Screw Micrometer,** for the exact measurement of objects too large to be included in one visual	

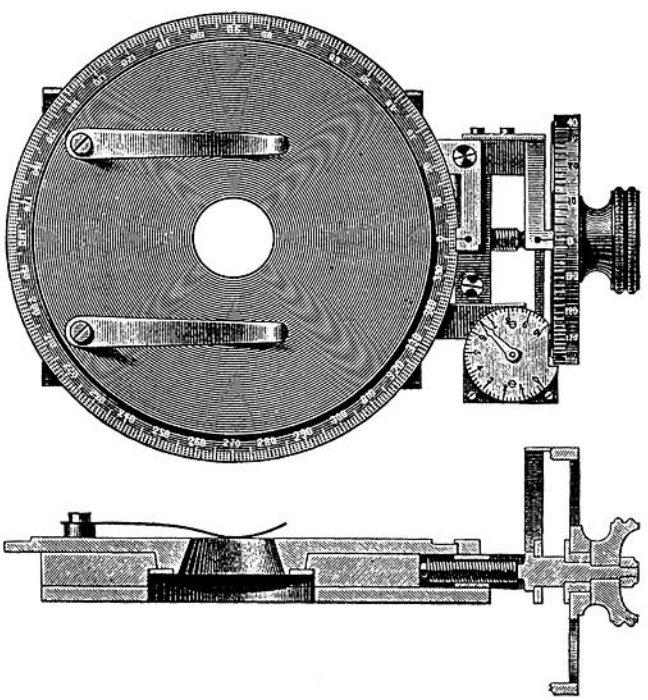

Fig. 33. Stage Screw Micrometer.

No.		Marks
	field of the microscope. — A sliding piece which is actuated by a micrometer-screw carries a rotating disc with divided circle; the divisions of the drum indicate 0,002 mm; complete rotations are counted by an index; the screw measures up to 10 mm. — The instrument is arranged to fix on the stages of the larger stands; in the case of those fitted with rotation disc, the latter has to be removed. (Fig. 33.)	120.—
	When ordering please to state the breadth of the stage which it is intended for.	

B. Apparatus for counting.

32	**Crossed-line Micrometer,** for dropping into the eye-pieces (in particular the micrometer eye-pieces). A square of 5 mm, divided into squares of 1.0 or 0.5 mm, as required; for counting scattered particles in the field	5.—
32a	**Set of Stops** of different diameters (1 to 10 mm) for dropping into the eye-pieces — micrometer eye-piece preferably — after P. Ehrlich	5.—
	1) For determining the numerical ratio of the various white corpuscles in leucaemic blood.	
	2) For determining the relative proportions of red and white corpuscles in cases of anaemia etc.	
	3) The smallest diaphragms for demonstrating objects placed in the centre of the field and also	
	4) For increasing the definition of very fine structural images.	
33	**Crossed-line Stage Micrometer,** a cross-line micrometer, being a sq. mm divided into 400 squares, which forms the bottom of a cell having an exact depth of 0.100 mm; the cubic contents of the fluid resting on one square below the cover-glass are, therefore, $^1/_{4000}$ cubic millimeters. With 2 plane cover-glasses. In case	15.—

No.		*Marks*
34	**Haemacytometer** after THOMA. This apparatus consists of 1) a cross-line micrometer, being a sq. mm divided into 400 squares, which forms the bottom of a cell having an exact depth of 0.1 mm, and 2) a blood-mixing pipette (mélangeur), which is also, of necessity, very accurately calibrated. With instructions. In case.	
	a) With mixing pipette for red corpuscles	30.—
	b) With mixing pipette for white corpuscles	32.—
	c) The same apparatus with both pipettes	44.—
	Pipettes alone.	
	One for red corpuscles (diluting 1 : 100)	12.—
	One for white „ („ 1 : 10)	14.—
35	**The same apparatus,** with a small movable stage, to assist the process of counting under the microscope **M. 10.—** extra.	

C. Measuring Apparatus for various other purposes.

36	**Brass Measure,** 100 mm, with chamfered edge	1.50
37	**Measures on plate-glass,** for drawings, in which the divisions lie on the surface of the paper without parallaxis, with fine, sharply engraved lines:	
	300 mm glass rule, divided in $^1/_1$ mm	9.—
	200 mm do. do.	5.—
	100 mm do. do.	1.50
	50 mm divided in $^1/_2$ mm on a 3 × 1 inch slip	1.50
	Any other scales to order	

No.		Marks
38	**The latter two with double divisions,** English measure and mm, each	2.50
39	**Fully divided circles** on plate-glass discs, with centre marks, for use as transposers:	
	Circle 80 mm in diameter, $^1/_1$ degrees	5.—
	Circle 120 mm in diameter, $^1/_2$ degrees	9.—
40	**Goniometer Eye-piece** (No. 2), for estimating the angles of microscopical objects, with divided circle and glass plate marked with a series of parallel lines; sliding adjustment to eye-lens . .	30.—
41	**Cover-glass Gauge** for the exact measurement of thickness of cover-glasses, thin plates etc. — The measurement is effected by a clip projecting from a box; the reading is given by an indicator moving over a divided circle on the lid of the box. The divisions show hundredths of a millimeter. Measures to upwards of 5 mm .	36.—

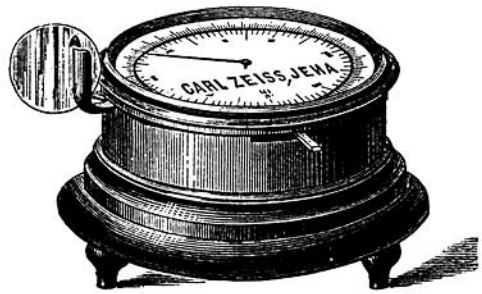

Fig. 34.
Cover-glass Gauge. No. 41.

42	**Cover-glass Gauge** of simpler construction; screw with divided disc and arrangement for regulating the pressure; reads 0.01 mm	12.—

Drawing Apparatus.

No.		Marks
43	***Camera lucida after ABBE.** The drawing surface is made visible by double reflection, from a large plane mirror and from the silvered surface of a small prism in the eye-point of the eye-piece. The microscopic image is seen directly through an aperture in the silvering of the prism. By the concentricity thus obtained of the pencil of rays reaching the eye from both the microscope and the paper, the image and pencil are seen coincidently without any straining of the eyes. With this apparatus moreover drawings may be made on a horizontal surface without perceptible distortion. The brightness of the paper in regulated by smoke-tinted glasses which fit into the prism casing. The apparatus is adjusted for the No. 2 Huyghenian and the compensating eye-pieces 4 and 6, but can also be used with very low amplifications, and also with the 6 and 10 dia. aplanatic lenses (No. 79) on the large dissecting stand I; if to be used on dissecting stand III it requires a special fitting (which we supply for M. 8.—)	30.—

No. | *Marks*

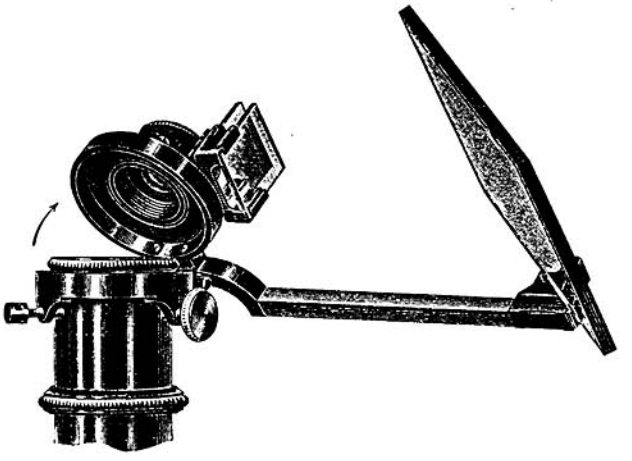

Fig. 35.
Abbe Camera lucida.

44 **The same apparatus,** with larger mirror on longer arm, so arranged that the prism case together with the mirror may be swung back round a horizontal pivot, ~~or, if desirable, withdrawn altogether,~~ the underpart remaining meanwhile on the tube in its adjusted position. (Fig. 35.) . . . . 42.—

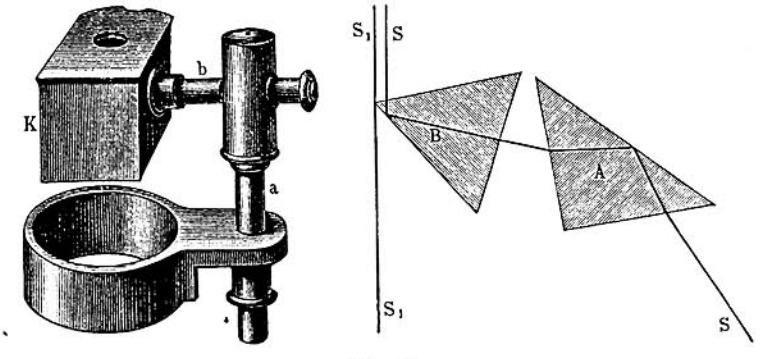

Fig. 36.
Drawing Prism.

45 **Drawing Prism** (Camera lucida) with two prisms; for fixing over the eye-piece. (Fig. 36.) . . . . . 21.—

Arrangements for Polarisation.

No.		Marks
46	**Polarisers:**	
	I. For use with the illuminating apparatus of the large stands. NICOL prism with flange on mounting to fit the carrier of the condenser, so that the ordinary diaphragms and also selenite and mica films may be placed over the polarising prism.	19.—

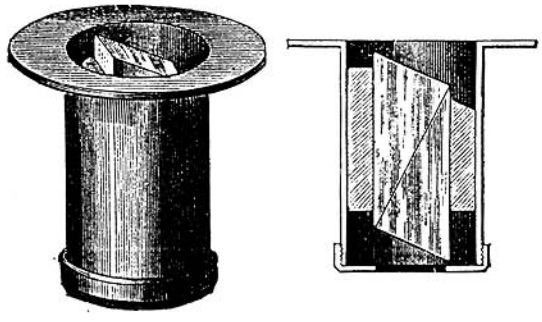

Fig. 37.
Polariser Nr. 46 I.

	II. Fitting the cylinder diaphragm of the smaller stands. NICOL prism with condensing lens	22.50

No.		Marks
47	**Analysers:**	
	I. PRAZMOWSKI prism in brass mount, for placing above the eye-piece	20.—
	II. The same with divided circle	35.—
48	**Complete Polariscopes for the larger stands** (with ABBE condenser; stands I to V incl.):	
	a) Polariser I and Analyser II (with divided circle) . . .	54.—
	b) „ I „ „ I (without divided circle) . .	39.—
49	**Complete Polariscopes for the smaller stands** (without condenser; stands VI and VII):	
	a) Polariser II and Analyser II (with divided circle) . . .	57.50
	b) „ II „ „ I (without divided circle) . .	42.50

Those possessing the goniometer eye-piece No. 40 may use its divided circle in conjunction with the analyser. The price of the polarising apparatus is, in this case, therefore, that stated for the polarising set without divided circle.

50	**Eye-piece for observation of axial images.** For use with Polariser I and Analyser II. Huyghenian eye-piece 2 with sliding eye-lens combined with a collective system consisting of two single lenses, which is adjustable to the upper focal plane of the objective by a sliding tube. (Fig. 38.) . .	30.—
51	**Series** of 8 selenite and mica films after MOHL	10.—



Fig. 38. Eye-piece for axial images.

Spectro-polariser, see No. 23.

Spectroscopic Eye-pieces.

No.		*Marks*
52	**Spectroscopic Eye-piece.** Eye-piece with slit mechanism between the lenses. The upper achromatic lens adjustable to focus on the slit. AMICI prism to place over the eye-piece. The whole connected with the body by a clamping screw	72.—
53	***Spectroscopic Eye-piece (Micro-spectroscope)** after **ABBE**. Achromatic upper lens adjustable to focus on the slit as above. Mechanism between the lenses for contracting and expanding the slit by symmetrical movement of the laminae (after MERZ) by means of the screw *F*; these may be sufficiently widely separated so as to open the whole visual field. The screw *H* serves to reduce the length of the slit to such an extent, that, the comparison prism being inserted, the image of the object under investigation completely fills the slit. Comparison prism with lateral frame and clips to hold the object and the mirror. All these parts in a drum combined with the eye-piece. Above the eye-piece, an AMICI prism of great dispersion, which may be turned aside about the pivot (*K*) to allow of the adjustment of the object being controlled, the prism being retained in its axial position by the spring catch *L*. A scale is projected on the spectrum by means of a scale-tube and mirror attached to the mount of the prism; the divisions of the scale indicate in decimals of a micron the wave-lengths of the section of the spectrum superposed by them. The screw *P* is for adjusting the scale relative to the spectrum.	

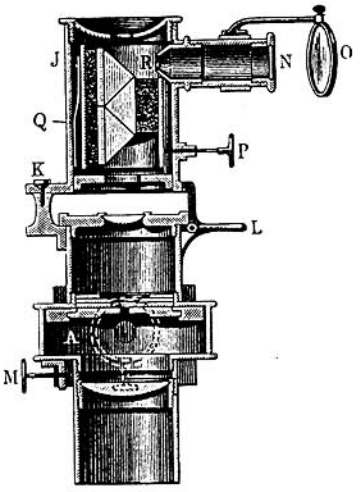

Fig. 39. Micro-spectroscope after Abbe. Section through centre-line of the whole instrument. (1/2 full size.)

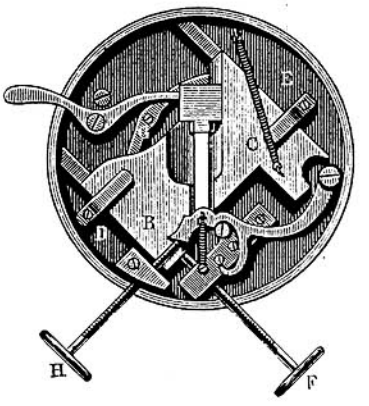

Fig. 40. Slit mechanism (Plane. Full size).

No.		*Marks*
	The apparatus is inserted into the tube in place of the ordinary eye-pieces and is clamped to the former by means of screw *M* in such a position that the mirrors *A* and *O* serving to illuminate the comparison prisms and the scale of wave-lengths are simultaneously illuminated by sun-light. In case, including a set of lithographed scales for recording observations. (Fig. 39 and 40.)	165.—
54	* **Micro-spectro-photometer** after ENGELMANN for quantitative micro-spectrum analysis, constructed on the principle of VIERORDT'S spectro-photometer. In place of the eye-piece the casing *A* is attached to the body of the microscope by the tube *R*; it contains two conaxial, independently movable slits in juxtaposition, which are symmetrically opened and closed by right and left handed screws. The width of each slit is read off accurately on the drums *T* and *T'* to 0.01 mm and may be estimated to the approximation of 0.001 mm. The one slit is occupied by the image of the object under investigation, and the other is illuminated by light from the source of comparison, which is	

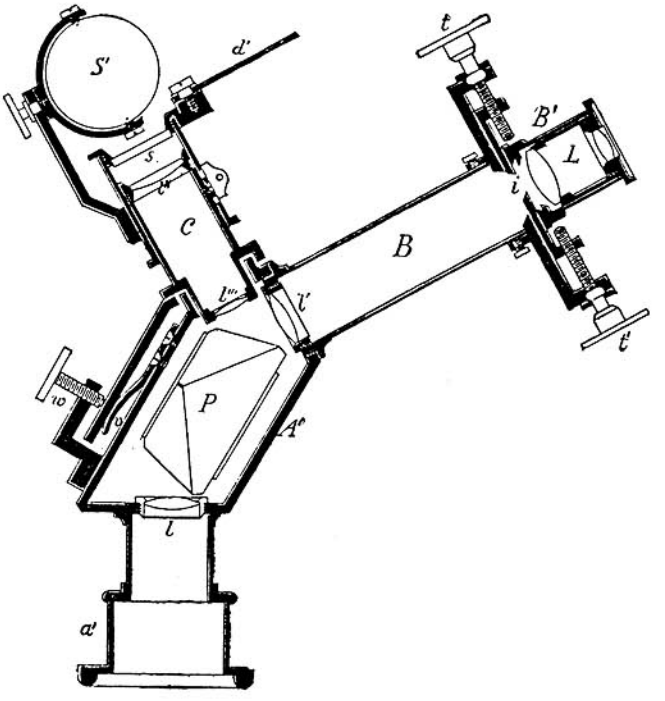

Fig. 41.

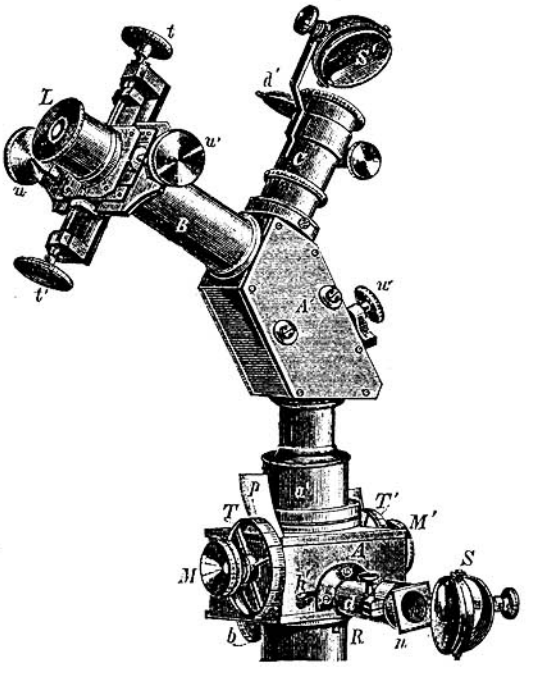

Fig. 42.
Micro-spectro-photometer after Engelmann.

No. | *Marks*

brought to it by a reflecting prism arranged above it and a lateral tube d with collimator lens, diaphragm carrier n and mirror S (or incandescent lamp).

In the upper opening of the box A either an eye-piece may be inserted and, by means of a sliding sleeve, made to accurately focus on the slit, or, instead of this (after proper adjustment of the image of the specimen to focus on the objective slit), the spectroscopic apparatus a' A' B C may be adapted and fixed in the proper azimuth by a click mechanism. This apparatus consists of the casing A' which on one side, the upper end of a', contains a collimator lens l, which serves to parallel the cone of rays proceeding from the objective before they enter a RUTHERFORD prism P of great dispersion. By the lens l' on the other side, at the lower end of B, the parallel rays proceeding from the prism are again brought to a focus; and this real spectrum is observed through an eye-piece L. By 2 slit mechanisms mounted at right angles to one another and actuated by the screws $t\,t'$, $u\,u'$ in the focal plane of the eye-piece, the visual field can be limited at pleasure after VIERORDT'S manner.

By means of two lenses shown at C, an image of a wave-length scale is projected on the spectrum by reflexion from the end-surface of the AMICI prism, which is illuminated by the mirror S' and put out of action by closing the shutter d'. Adjustment of this scale is made by inclining the whole scale-tube C by means of the screw w with its counter spring v (Figs. 41 and 42) (vide Zeitschr. f. wiss. Mikroskopie V, p. 289, 1889) . . | 480.

Various Optical and Mechanical Apparatus.

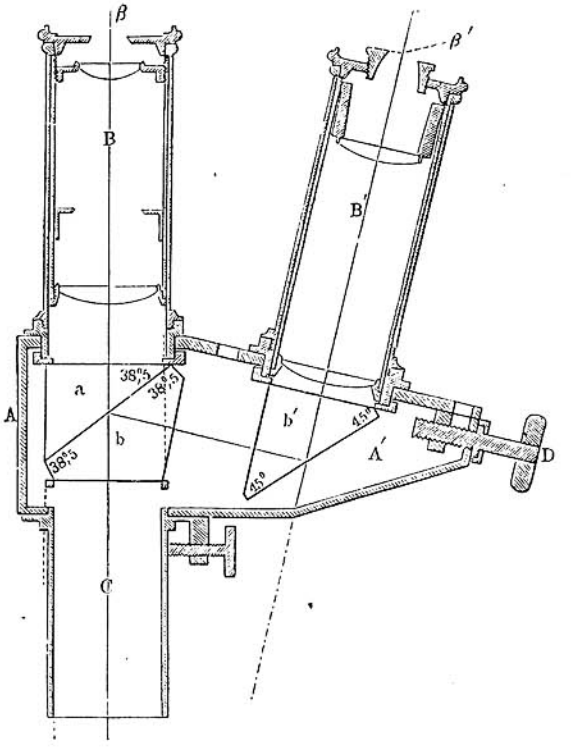

Fig. 43.
Stereoscopic Eye-piece.

No.		*Marks*
55	***Stereoscopic Eye-piece** after ABBE, for stereoscopic and indifferent binocular observation of microscopical objects with any degree of high magnification (CARL's Repertorium d. Experimental-	

No. | *Marks*

physik, 1881, p. 298; Journ. of the R. Micr. Soc. 1881, p. 203). The division of the pencil of rays emerging from the objective to produce two separate images is effected at the upper end of the tube by partial reflexion at a thin stratum of air between two juxtaposed glass prisms *a* and *b*. The direct rays proceed to an eye-piece *B*, arranged in the axis of the tube, the reflected rays undergo another reflexion through a prism *b'* in a second eye-piece *B'* placed excentrically so as to make its axis and that of the tube include an angle of 14°. Both eye-pieces give images of equal magnification. The excentric eye-piece may be adjusted by a screw *D* to suit the inter-ocular width of the observer. Bisection of the pencil for producing stereoscopic effects is made by adjustable semi-diaphragms above the eye-pieces; without these the apparatus gives binocular non-stereoscopic vision. Available with low or high power objectives (only achromatic) on any of the large stands provided with rackwork coarse adjustment and which permit of the body being shortened to at least 140 mm. (Fig. 43.) In case . . . . . 150.—

In ordering this binocular apparatus for any microscope it will be necessary to send a sharp sealing-wax impression of the upper end of the tube.

56 **Reversing Prism** after NACHET (prisme redresseur), for obtaining erect images when using the compound microscope as a dissecting microscope. With plate mount to rest on No. 2 eye-piece . . . . . 18.—

57 * **Diffraction plate** after ABBE, for demonstrating the effects of diffraction in the formation of microscopical images (Monthly Micr. Journ., Febr. 1877, p. 82; DIPPEL, Mikroskop p. 144). — Three cover-glasses silvered at their lower surfaces, with traced groups of parallel and crossed lines, cemented on a glass slip; in case . . . . . 7.—

No.		Marks
57a	* **The same,** with a set of diaphragms and an arrangement for placing and revolving the same above the objective, designed for objective aa	12.—
58	**Bulls-eye Lens** 100 mm in diameter, on stand; in case . .	50.—
	Idem 80 mm	36.—
	Idem 60 mm	27.—
59	**Microscope Lamp.** Gas lamp of special construction mounted on brass stand with vertical adjustment, combined with a glass globe of abt. 150 mm (6″) dia., which when filled with water or ammonio-cupric solution acts as a condenser. To obtain a proper illumination the gas flame should be about 15 cm (6″) behind the globe, and the mirror of the microscope the same distance in front of it with the most concentrated part of the cone of rays impinging on it. — The lamp gives an excellent bright and white light which almost completely supplies the place of good daylight	30.—
59a	**Glass-globe** and wood-stand alone	5.—
60	**Hand Spectroscope** (Pocket Spectroscope) after BROWNING, for observing the effect of absorption in larger objects — with adjustable slit and AMICI prism of high dispersion.	
	a) Without comparison prism	30.—
	b) With comparison prism	40.—

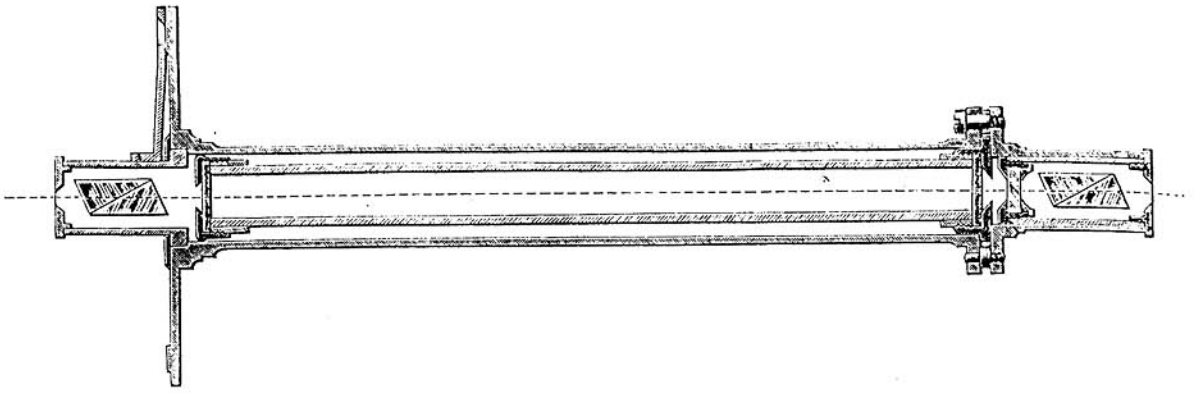

Fig. 44.
Saccharimeter.

No.		*Marks*
61	**Saccharimeter,** for estimating the percentage of sugar in fluids. With tube for liquids 200 mm long made to slide in a brass tube, which carries a polariser and double quartz plate at one end and at the other an analyser with divided circle. The circle is divided to semi-degrees, and tenths can be estimated with accuracy. Observation is made by adjusting the so-called transition colour on both halves of the quartz plate, te tube being directed by hand towards a white surface. Only suitable for fluids containing a small percentage of sugar. (Fig. 44). With directions	65.—
61a	**Idem** with small telescope for the more accurate observation of the double quartz plate	75.—
62	***Warm Chamber** for keeping microscopical objects at certain temperatures during observation. After PFEIFFER. The heating-stages ordinarily used for this purpose leave the observer in doubt, as to whether the temperature, to which the object is raised, really corresponds to that indicated by the thermometer. The present arrangement affords full security on this point, as it permits of the object, together with the stand and the surrounding air being brought up to and maintained at a certain temperature.	

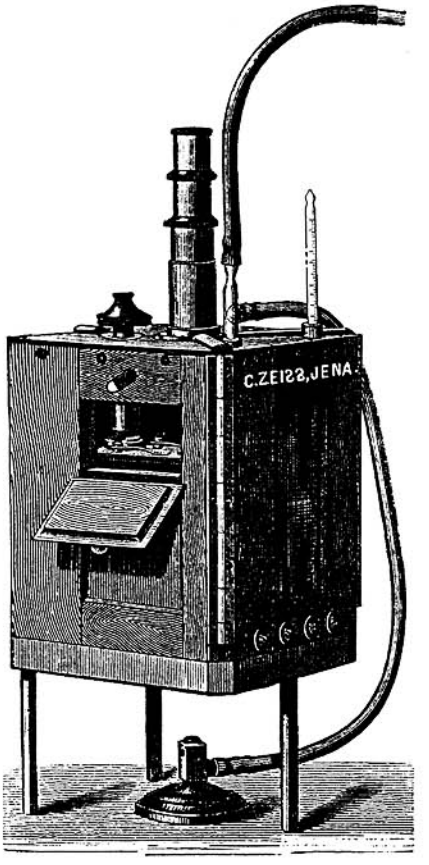

Fig. 45.
Warm Chamber.

No. | *Marks*

It consists of a mahogany box enclosing the whole stand in a nearly air-tight manner; in the anterior wall is a glass window to admit the necessary incident light; on both sides are closely fitting doors to allow of the specimen being moved by the hands. The whole stands on a thick metal plate and tripod. The former is heated from below by a gas-burner controlled by a thermo-regulator. The temperature inside the box is observed by a thermometer and may be raised up to 45 ° C without detriment to either stand or objectives. (Fig. 45.)

No.		*Marks*
	a) For large stands (I, I^a, photo-micrographic stand) . . .	70.—
	b) For medium stands (II^a, IV, V)	60.—
	With Micro-burner **Mk.** 7.— more.	
63	**Turn-Table** on wood base for ringing specimens	9.—
64	***Attachable mechanical stage.** (Fig. 46.)	
	This mechanical stage may be attached by any one to stands I, I^a (with vulcanite stage-plate), II^a, IV, V and "BABUCHIN" stand at a moment's notice.	
	It is in principle similar to those designed by Mr. MAYALL and Herr Reichert. Two sliding pieces mounted at right angles to one another after the manner of a lathe slide-rest are moved by means of two milled heads *S*, *T* (the rotation of *S* effecting by rack and pinion the forward and backward motion, that of *T* the lateral movements). These sliding pieces pass along millimeter scales which serve to record their position at any desired movement*). The object-slide *O* is placed with its lower left hand corner into the corresponding corner in a ledge attached to the right and left sliding-piece; a small obliquely placed plate *P* presses against the upper right hand corner of the slide, *P* being attached to a thin rod sliding in a hollow prism; this rod also has a spring *F* attached to it which by pressing against the upper edge of the slide keeps it securely in position. The object-slide always remains in immediate contact with the stage of the microscope-stand, which is imperative if the illuminating apparatus is to exercise its full efficiency. There is no restriction as to size of slide	75.—

*) The amount of the rack and pinion movement is 30^{mm}, that of the lateral movement 50^{mm}; the reading is taken with the aid of a simple index; but 0.1^{mm} may be estimated with ease.

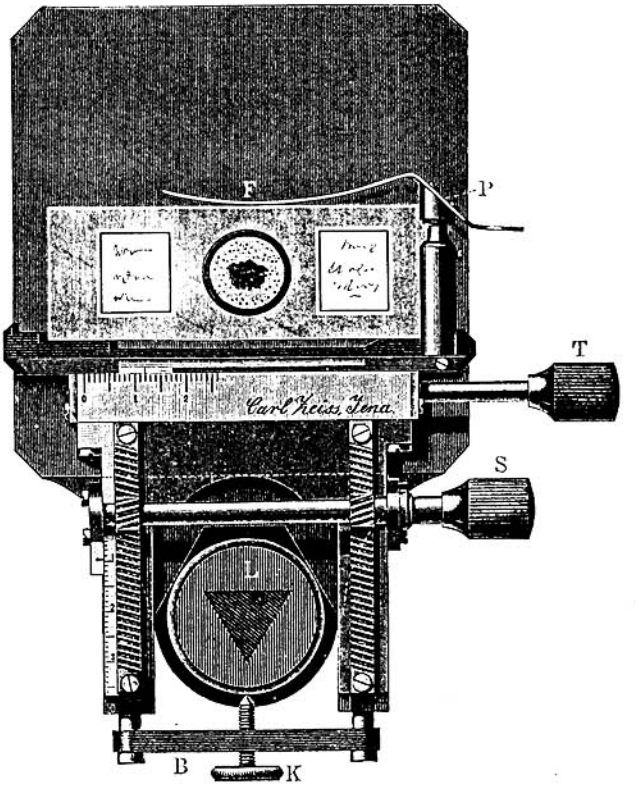

Fig. 46.
Attachable mechanical stage.

No.		*Marks*
65	**Slide Ruler** for searching section series; forms in many cases an efficient substitute for a mechanical stage. To clamp to the stages of stands I, IV and V	5.—
66	***Test-tube Holder** for microscopic examinations after VON SEHLEN (Zeitschr. f. wissensch. Mikroskopie VII, p. 17, 1890) .	5.—

Apparatus for Projection and Photo-micrography.

*Large photo-micrographic apparatus.

(Fig. 47.)

The general arrangement of this apparatus has remained the same as that described at some length by Dr. Rod. Zeiss in our "Spezialkatalog über Mikrophotographie" (German)*) and briefly sketched out in the last edition of our catalogue (No. 28, pp. 76 to 79). In detail, however, the apparatus has been subjected to reconstruction with the object of removing some of the difficulties attending manipulation and also in order to render the apparatus still better fitted for projection on a screen, both with high magnifications involving the interposition of a microscope and with very low amplifications obtainable with special low power projection lenses of long focus.

These modifications relate to the mechanical arrangement of the table upon which the microscope or projection-stand, the source of light and the intervening auxiliary apparatus are mounted.

As in the original apparatus this table is isolated from the camera—which is only required for photography but not for projection. Table and camera are mounted on separate stands and are only connected during photographic exposure. This arrangement affords a double advantage:

1) All adjustments on the microscope and its appendages may be made by the observer with ease and precision while sitting directly before the microscope, whereas the usual fixed combination of the two parts implies a very inconvenient posture.

2) the apparatus readily lends itself to the purposes of demonstration by projection.

*) Which to the extent of the present edition we are ready to forward to applicants (price **Mk. 3**).

By a very simple light excluding sleeve and by the camera being movable the connection of the two parts is readily effected in such a manner as to exclude the admission of external light.

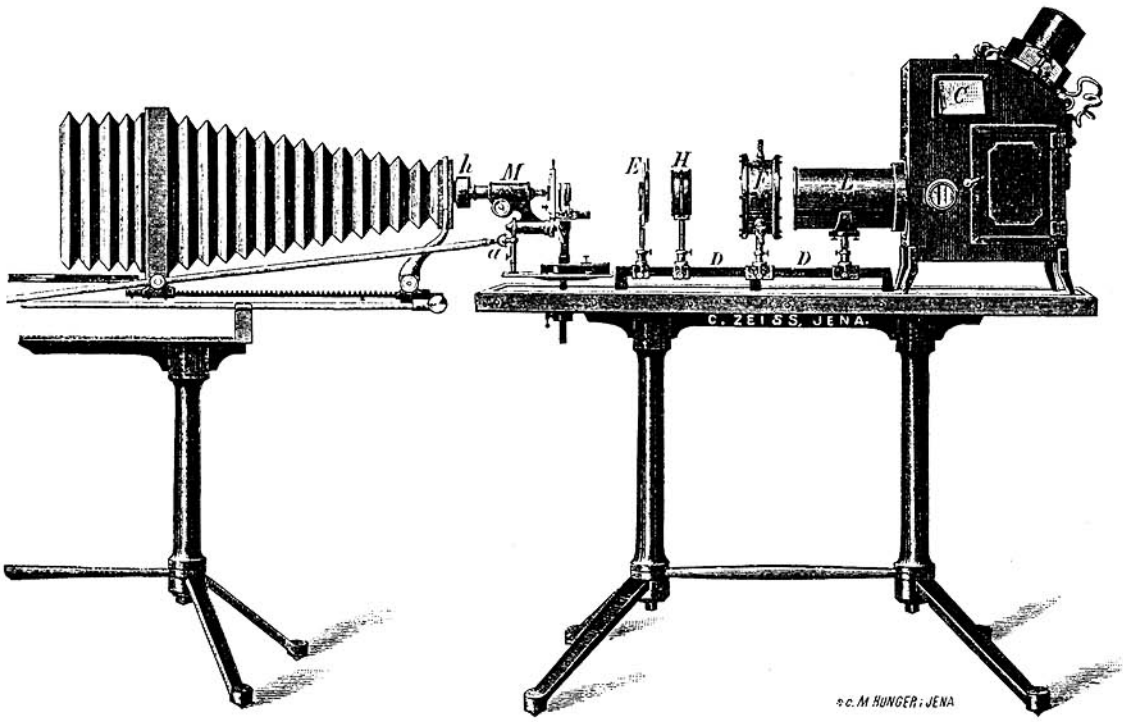

Fig. 47. Large Photo-micrographic and Projection Apparatus.

A wood-base 60×125^{cm} ($24'' \times 50''$), supported by two cast-iron standards is fitted at one end with an adjustable base-plate upon which the microscope is to be placed; the middle portion of the wood base is occupied by a horizontal guide-bar of 60^{cm} ($24''$) length while the other end of the base is left entirely free in order to provide room for the various sources of illumination.

The principle feature of the design of this apparatus consists in arranging the support of the microscope and its appendages in such a manner that they are or may be once for all accurately centered, subsequent adjustment being only necessary for the source of illumination; here adjustability is imperative for obvious reasons.

In all cases where the appliances forming part of the apparatus are supplied by us simultaneously, no adjustments beyond those effected by us and that of the source of illumination will be needed. The apparatus when once properly adjusted is not subject to decentration.

A more detailed description of the arrangement of the apparatus together with short instructions will shortly follow in a separate pamphlet.

No.		Marks
67	**Large Photo-micrographic and Projection Apparatus.**	
	Scheme to establish the price according to the various requirements:	
	I. Projection Table and its Appendage.	
	Wood Base 60 × 125 cm (24″ × 50″), mounted upon heavy cast-iron frame, fitted with guide-bar and adjustable sole-plate for microscope stand	130.—
	The sole-plate is made to take and center any of the larger inclinable stands. We recommend as an instrument specially constructed for photo-micrography and projection and solely adapted for the 35 and 70 mm projection systems (to be used without eye-pieces) the	
	Photo-micrographic stand (No. 6, p. 36)	350.—
	Accessories:	
	Centering achromatic condenser with iris diaphragm, to insert in lieu of the usual non-achromatic condenser (No. 20, p. 62) .	75.—
	Or instead of this the simpler	
	Achromatic condenser without centering arrangement and without iris diaphragm, to insert above iris-diaphragm in diaphragm-carrier (No. 20a)	45.—
	Centering collar for objectives used in lieu of a condenser for illuminating (No. 17 e)	20.—
	Small convex-lens, to replace condenser when using very low powers (35 and 70 mm)	5.—
	Focussing gear for turning the micrometer-head from the distance (e. g. back of camera); arranged to slip on an upright column on sole-plate, including a HOOKE's key	15.—
	To carry over	. . . . .

No.		Marks
	Carried over	.....
	Optical Outfit of the Guide Bar	
	Iris diaphragm of 67 mm greatest aperture, on stand, which also serves as a support for a ground glass disc	30.—
	Id. with micrometer adjustment in the direction of the optic axis and fitted with clips, the whole serving as an object-stage when it is required to project large objects by means of macrophotographic lenses	45.—
	Stand with two light-filters	24.—
	1) For sun-light.	
	Plane reflecting mirror, on stand, with coarse and fine adjustment about horizontal and vertical axis	45.—
	Heliostat (by R. Fuess in Berlin), adjusted for the polar altitude of the place, which serves to keep the direction of the incident rays approximately constant; with large mirror . . .	270.—
	2) For electric arc, zircon or magnesia light.	
	Collective system of 120 mm (5″) useful aperture, with shell to screw in the light	150.—
	Heat filter (water-chamber)	47.—
	Stand for projection lenses of long focus (photographic systems).	24.—
	Adapters for special or foreign lenses	2.50
	3) For lamp-light.	
	Biconvex lens on stand	30.—
	To carry over	.....

No.		*Marks*
	Carried over	.....
	We supply the following illuminating apparatus at their manufacturer's prices:	
	a) For demonstration in lectures:	
	Electric arc lamp, projection lamp by SCHUCKERT of Nuremberg, with inclinable carbons; about 3000 c. p. with 16 amp. . .	250.—
	Other arc lamps according to order.	
	We are prepared to supply detailed information respecting complete electric plants and shall be happy to suggest the necessary machinery (motor, dynamomachine etc.) for our clients. (Approximate total cost 3500 to 4000 M. for 3000 c. p.)	
	b) for lower magnifications, sufficient for objective demonstrations at short distances of screen and for photographic work with high powers:	
	Zircon or Magnesia light with oxy-hydro-carbon burner.	
	.The complete apparatus consists of	
	Linnemann's (medium size) oxy-hydro-carbon lamp, mounted on adjustable iron stand with flexible inlet pipes	40.—
	Platinum disc to receive the incandescent body, 10 mm dia. .	5.—
	Incandescent body, disc of zircon, 10 mm dia.	3.—
	„ „ prepared magnesia 10 mm dia.	0.40
	Gas generator for continuous supply of oxygen	30.—
	Gasometer, made of copper with pressure gauge for controlling pressure of oxygen	130.—
	The chemical works of Dr. TH. ELKAN, Berlin N., Tegelerstr. 15, supply compressed oxygen (100 atm.) in globes holding 1000 litres (price M. 10.).	
	To carry over	.....

No.		Marks
	Carried over	. . . . .
	c) Sufficient for photography (long exposures being required for high amplifications):	
	Lamp-light.	
	Argand burner with adjusted air-inlet (microscope lamp No. 59 without water globe)	25.—
	AUER'S incandescent gas-light will also be found to yield a good illumination; its successful application implies, however, some experience.	

II. Large Photo-micrographic Camera.

Mounted on two cast-iron standards on a level with the projection apparatus. The camera, which is mounted upon a light iron frame slides backwards and forwards as a whole. Greatest length of bellows 1.5 m (3′ 9″); this length may be shortened to any desired degree. The bellows consist of two parts. The part nearest the microscope may be fixed in a vertical or any other intermediate position; front and back of this part may be moved independently of each other by means of rack and pinion. The dark slides, which fit both parts of the bellows, are made to take plates 24 × 24 cm (9 × 9″) and can be supplied with frames for smaller sizes.

Price of the camera, incl. ground and unground focussing-plate, double dark-slide	195.—
Movable dark-slide for making exposure-scales. The sensitive plate is arranged to slide behind a slit cut in a fixed screen and upon it a series of narrow strips of the central portion of the object may successively be photographed with varying exposures.	25.—
Achromatic focussing lens mounted in tripod	18.—
Total	. . . . .
Separate double dark-slides, each	20.—
Frames for plates for any standard or other size, each . .	1.50

No.		Marks
68	**Small (horizontal) Photo-micrographic Camera after Francotte.** (Fig. 48.)	

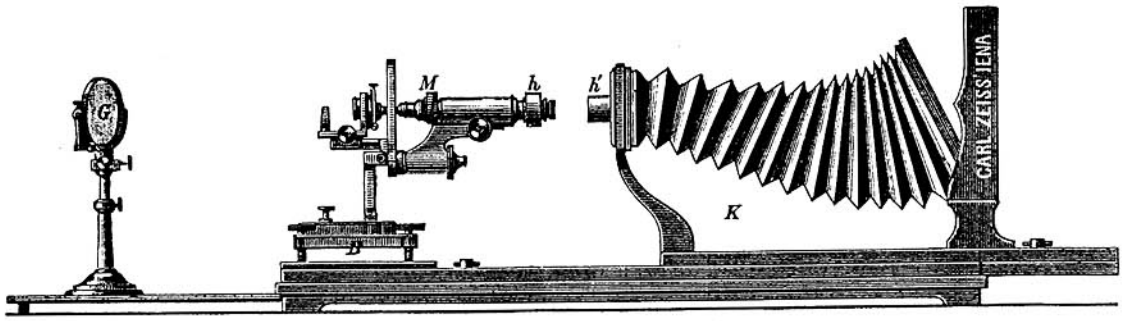

Fig. 48.
Francotte's Small Photo-micrographic Camera.

Bellows *K* 60 cm (2′) in length, made to slide on a firm wooden base-board and capable of varying extension. A three screw levelling stand *B* placed upon the base-board serves to adjust the position of the microscope (which must be of the inclinable type) with respect to the camera. The base-board is fitted with an extension board upon which may be placed the source of light or any of the auxiliary apparatus interposed between the microscope and the source of light in the case of the large apparatus described on the preceding pages. These appliances, if required for the FRANCOTTE Camera, are fitted with a "round foot".

Price of camera incl. double dark-slide 20 × 20 cm (8 × 8″), ground and unground focussing-plate	70.—
Separate double dark-slides, each	18.—
Frames for any standard or other size, each	1.50

Auxiliary apparatus the same as in the case of the large camera.

No.		Marks
69	***Small Vertical Photo-micrographic Camera.** (Fig. 49.)	

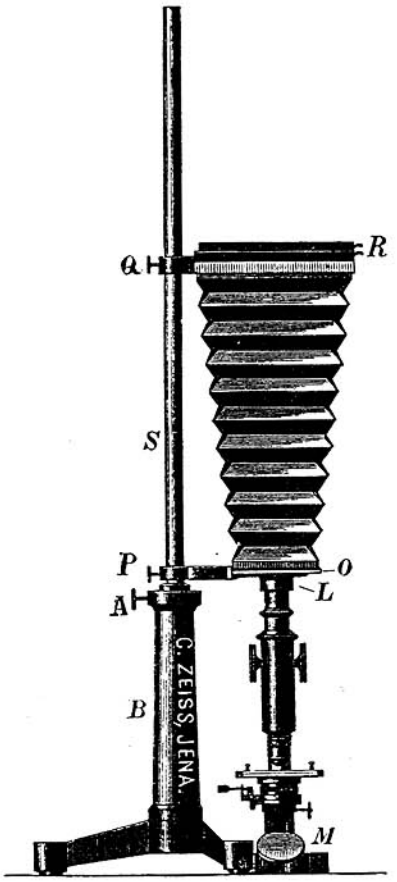

Fig. 49. Small Vertical Photo-micrographic Camera.

Bellows having a length of 45 cm (18″). Either camera-end may be moved up or down along the sliding-bar *S* by means of the collar-rings *P* and *Q* and may be clamped in any position. Rod *S* is pivoted in the socket *B* and by this means the camera may be readily placed over the microscope or swung away from it. The apparatus may be mounted upon any firm table.

Price with double dark-slide for 12 × 15 cm (4 3/4 × 6″) plates, ground and unground focussing-plate . . . . . 75.—

Separate double dark-slides, each . . . . . 15.—

Auxiliary apparatus the same as in the case of the preceding camera.

Dissecting Microscopes and Magnifiers.

Dissecting Stands.

No.		*Marks*
70	***Dissecting Stand I** after PAUL MAYER. Heavy horse-shoe foot; the stage consists of a large metal frame (10 ^{qcm} = 4 in. square), to which are attached wooden folding hand-rests; adjustment by rack and pinion, plane and concave mirrors with universal motions. The triple dissecting system No. 76 forms a suitable combination for "teasing" small objects on a slip or in a watch-glass; it may be fixed in the ordinary lens-holder and a metal plate with stage opening of the usual size, which can be closed below by a black or white disc, may be placed under the object into a recess provided in the stage-frame. In the examination of large objects, particularly living aquatic animals, the aplanatic lenses Nos 78 and 79 (6 and 10 dia.) will be found useful; they fit into a separate arm which may be inserted into the ordinary lens support and, by this arrangement, the whole of the stage can be scanned. In this case the metal stage is replaced by a glass plate, and the above-mentioned white and black discs serve as convenient means of modifying the illumination. With low powers a disc of white drawing paper should be clamped over one of the mirrors by means of a clamping ring supplied with the instrument for this	

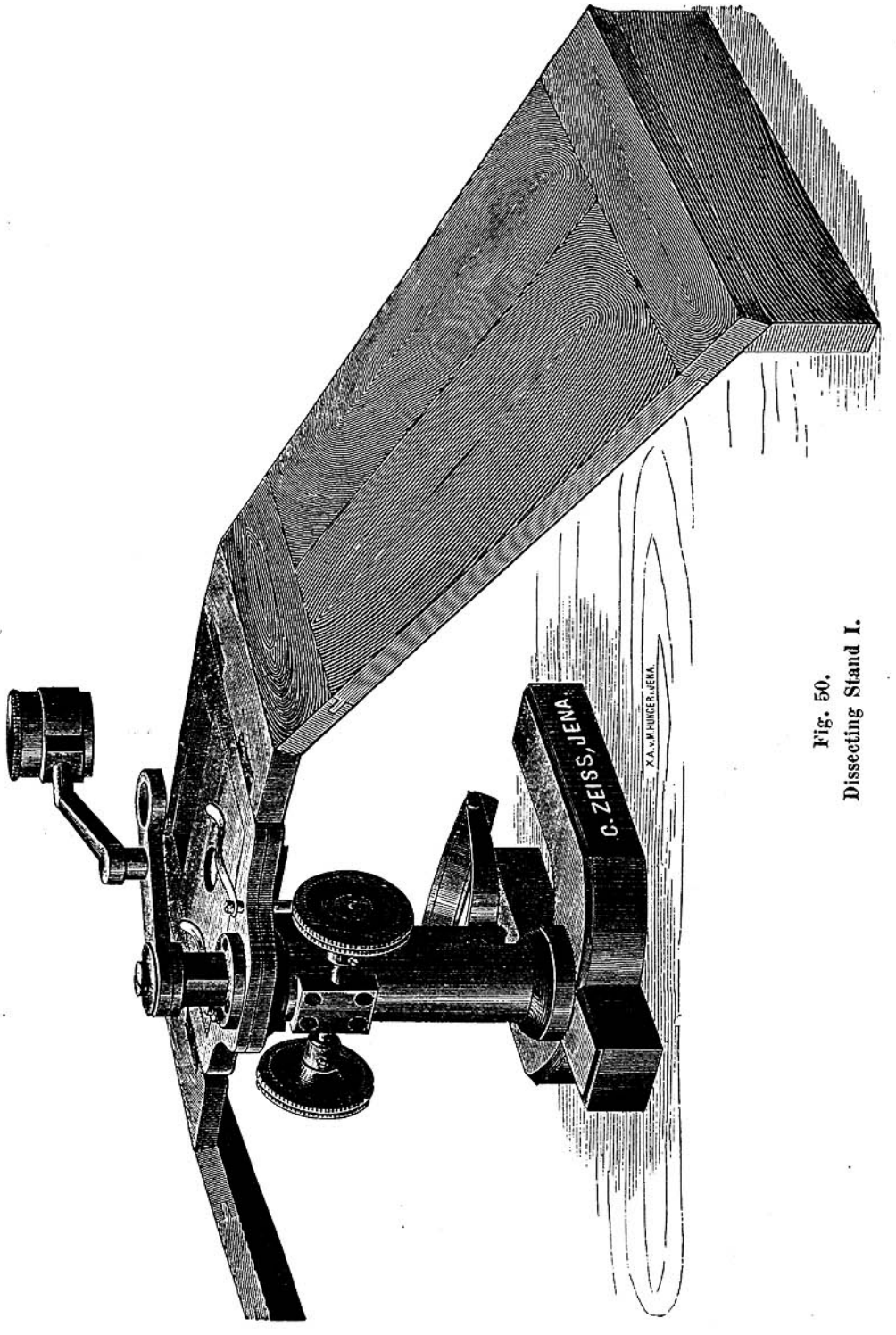

Fig. 50.
Dissecting Stand I.

No. | *Marks*

purpose. A brass plate made to fit the frame serves as a support for small dissecting dishes which may be cemented to it by means of paraffine; by means of a separate arm also dissecting lens No. 76 may be conducted over the entire stage. The whole in mahogany case fitted with lock and handle. (Fig. 50.)

Without lenses . . . . . 100.—

Application of the ABBE camera, vid. p. 77.

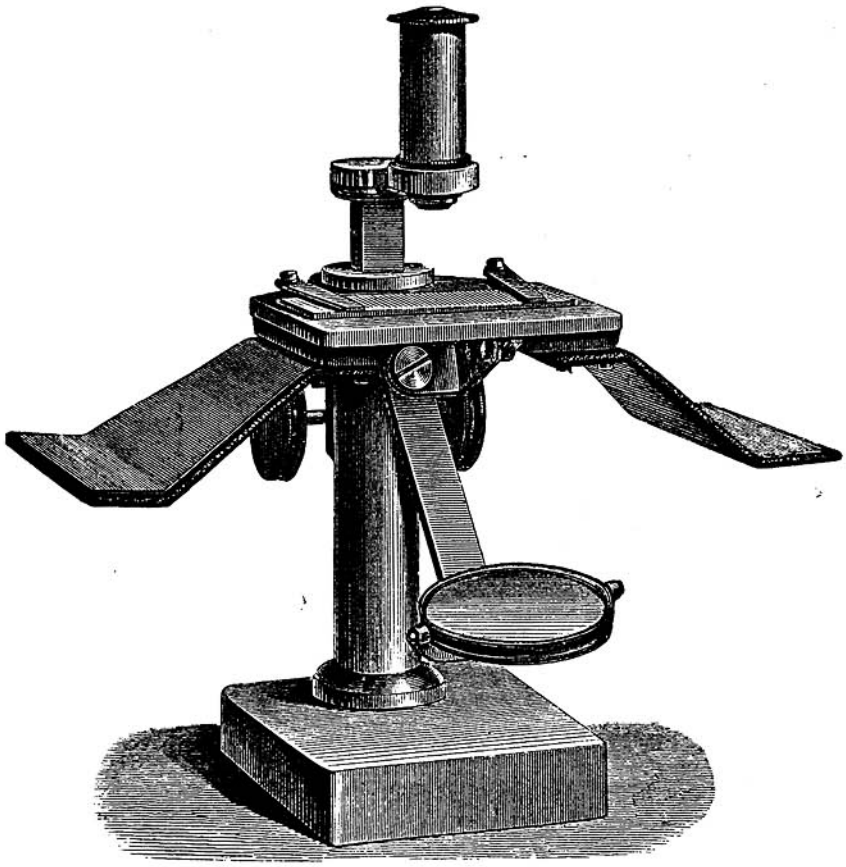

Fig. 51.
Dissecting Stand III.

71 ***Dissecting Stand III.** Heavy square metal base, large stage, 75 × 60 mm (30 × 24″), to which are attached leather covered hand-rests. Adjustment by rack and pinion; large concave

No.		Marks
	mirror. Arranged for Nos 76 and 78 (10 and 20 dia.). A separate lens holder required if lens No. 79 (6 and 10 dia.) is to be used. (Price of this holder **Mk. 5.—**.). In case fitted with lock and handle. (Fig. 51.) Without lenses	50.—

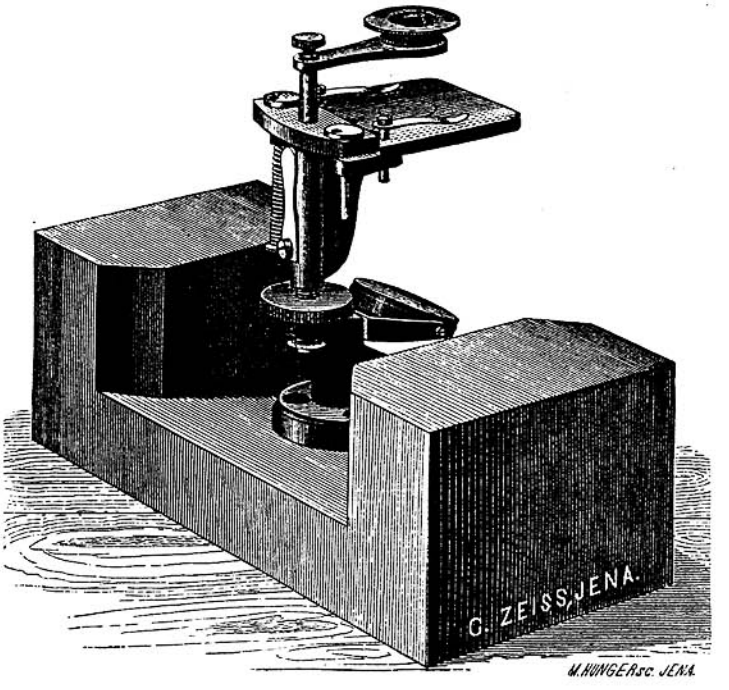

Fig. 52.
Dissecting Stand IV.

72	* **Dissecting Stand IV.** Constructed on our well known former model; coarse adjustment by sliding the lens holder, fine adjustment by micrometer screw. Concave mirror. (Fig. 52.)	
	a) In case on which it screws when in use	18.—
	b) With case and separate foot, with rests for the hands.	21.—
	c) Without case, screwed to the foot	18.—

The lenses described under the numbers from 80 to 82 are recommended as particularly suitable for this stand whilst Nos 76 to 79 are not suited for it.



Fig. 53.
Dissecting Stand V.

No.		*Marks*
73	**Dissecting Stand V.** Small brass stand with stage, above which a lens slides up and down in a holder. (Fig. 53.)	
	a) With blocks for supporting the hands	10.—
	b) Without this	9.—
	Only suitable for use with lenses Nos 81 and 82 or doublet No. 80 (15 and 30 dia.).	

Lens Holders.

No. | *Marks*

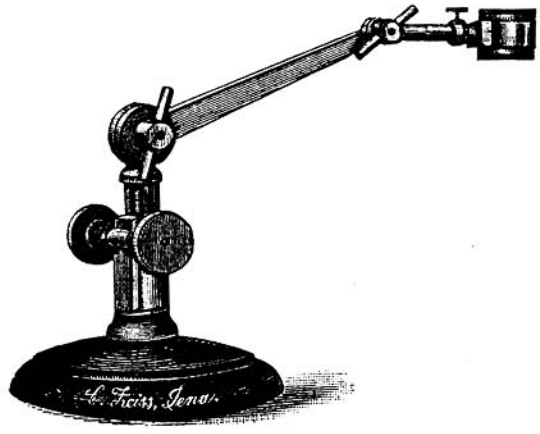

Fig. 54. Lens Holder I.

74 **Lens Holder I.** Heavy metal foot, lens holder with hinge joints, rack and pinion for focussing . . . . . 25.—

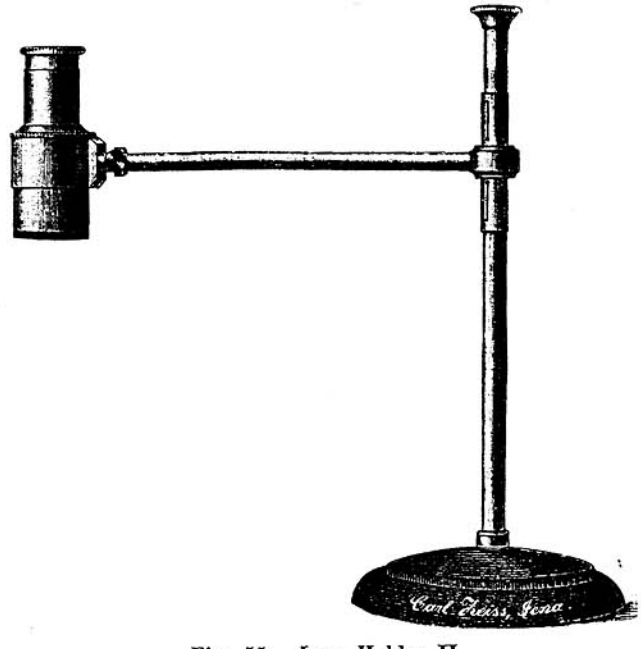

Fig. 55. Lens Holder II.

75 **Lens Holder II.** Heavy metal foot with vertical brass rod and sliding lens holder . . . . . 12.—

The lens holders are specially constructed for use with the BRÜCKE lenses Nos 83 and 84, but can also be employed with other low power lenses (Nos 79 and 81).

Dissecting Lenses.

No.		*Marks*
76	***Dissecting Combination Lens,** consisting of three achromatic lenses (objective) and an achromatic concave eye-piece; magnifying 100 diameters with a working distance (9 mm) which affords ample room for convenient manipulation with knife and needle during observation	40.—

By unscrewing the third and second lens of the objective and using the latter without the eye-piece a useful series of graduated magnifications may be obtained as shown in the following table:

3	lenses	with	eye-piece	100 diameters
2	„	„	„	60 „
1	„	„	„	40 „
3	„	without	„	30 „
2	„	„	„	20 „
1	„	„	„	15 „

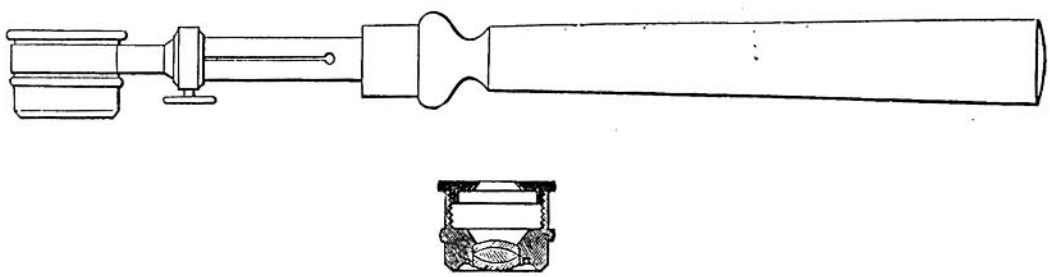

Fig. 56.
Aplanatic Lens after Steinheil, with Handle.

78	**Aplanatic Lenses** — STEINHEIL'S formula — composed of three cemented lenses, giving relatively long focal distances with large flat field; the higher lenses for use with the dissecting microscopes, the weaker ones as hand lenses or with a lens holder. Magnifying 6, 12, 20; in wood capsule, each	12.—

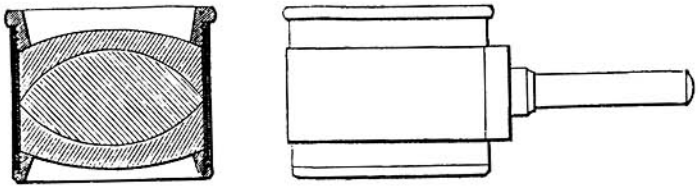

Fig. 57.
Improved Aplanatic Lens.

No.		Marks
79	*Aplanatic Lenses, of similar construction, with exceptionally large field, the lower type suitable for use with ABBE camera No. 43 or 44 (vid. p. 77); 6 and 10 diameters; in wood capsule, each	15.—
	Handle with ring for lenses 78 and 79	3.—
	Tripod for same	3.—
80	**Doublets**, old formula.	
	a) × 15 in case	6.—
	b) × 30 „ „	6.—
	c) × 60 „ „	9.—
	Designed for the dissecting stands IV and V; not suitable for free hand work owing to the high amplifications.	
81	**Magnifier**, two lenses in brass mounting, magnifying 10, lower lens alone 5, in capsule	6.—
	Designed for dissecting stands IV and V and also as a hand magnifier.	
82	**Magnifier**, same construction simplified for dissecting stand V, in wood capsule	4.—
83	**Dissecting Lens** after BRÜCKE, with long focal distance, magnifying 4 to 5 times	11.—

No.		*Marks*
84	**Dissecting Lens** after BRÜCKE, double objective with achromatic lenses of 33 mm aperture and sliding eye-piece, magnifying 5 to 10 times	30.—

The above two numbers are specially designed for the lens holders Nos I and II.

Hand Magnifiers.

87	**Achromatic Magnifier**, in ivory mount to fold, as above, with two achromatic lenses; magnifying 3, 5 and 8	12.—

Synopsis of Magnifiers.

No.	Type	Magnification	Focal distance mm	Visual field mm	Price Mks.
78	Steinheil aplanatic lenses	6	34	18	12.—
		12	20	9	12.—
		20	10	3.5	12.—
79	Improved aplanatic lenses	6	32	30	15.—
		10	12	15	15.—
80	Doublet a)	17	13	4	6.—
	Doublet b)	33	5	2	6.—
	Doublet c)	70	2.5	1.2	9.—
81 and 82	Magnifier	10	13	14	4. and 6.—
83	Brücke dissecting lenses	5	70	20	11.—
84		5—10	70—60	13—7	30.—

Remarks. The magnification is calculated for a normal image distance of 250 mm (10″).

The focal distance is the distance between the object and the lower surface of the lens, as adjusted by a normal-sighted observer.

The distance given above is rather smaller with short-sighted and greater with long-sighted persons.

The same applies to the given linear diameter of the field.

These values are, therefore, only approximated and intended to give a rough idea.

Carl Zeiss, Optische Werkstätte, Jena.

Microtomes.

No. | *Marks*

We have discontinued to supply the KÖRTING microtome. Of late years the more elaborate microtomes have undergone such manifold changes and have become so complicated, that only workshops which devote themselves to this special branch under the constant guidance of experts can hope to manufacture them with any success. We, therefore, limit ourselves to the simple microtomes which we have been making for a number of years and which admittedly answer the purpose for which they were designed.

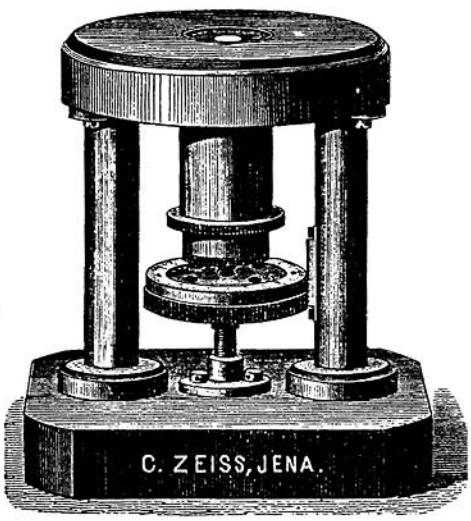

Fig. 58.
Microtome.

89 * **Microtome** after our former pattern. Round polished glass plate 80^{mm} in diameter, supported by two pillars on a heavy brass foot, on which the knife is worked by hand. The specimen to be cut is imbedded in a brass tube and pushed up through an opening in the plate by a screw with divided head. The divisions on the head indicate the thickness in hundredths of a millimeter. (Fig. 58.) With knife, in small case . . . . . 40.—

No.		Marks
90	**Hand Microtome.** Round flat brass plate 80 mm in diameter, with a cylindrical jacket by which the instrument is held in the hand and through which the specimen is advanced by a screw. The thickness is indicated on a divided disc. For use with an ordinary razor	18.—

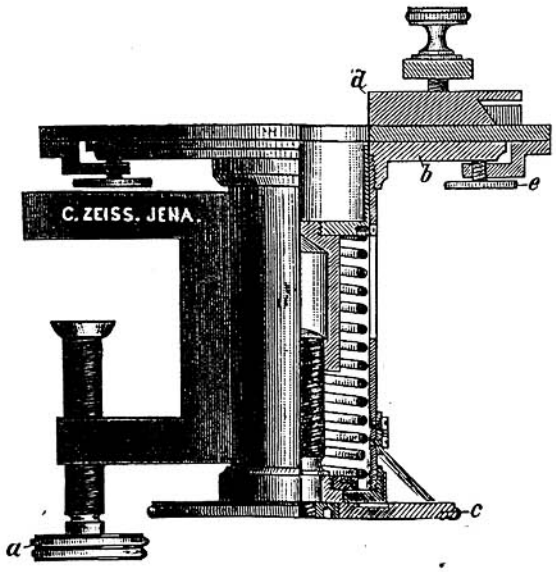

Fig. 59. Francotte's Microtome.

91	* **Microtome after FRANCOTTE,** similar to the above; the knife is worked by a metal carrier (*d*), and the whole may be fixed to a table by a clamping screw (*a*). (Fig. 59.)	30.—
92	**Knives** for the microtomes 89, 90 and 91. Large razors with straight blade and folding handle	5.—

In order to meet the wishes of our friends abroad we shall be glad to procure for them, together with the microscopical outfits ordered:

Microtomes,
Complete sets of dissecting instruments,
Collections of microscopical specimens.

In such cases please to state the approximate prices.

Slips and Covers.

No.		*Marks*
93	**Slips of the Giessen Pattern** — 28×48 mm:	
	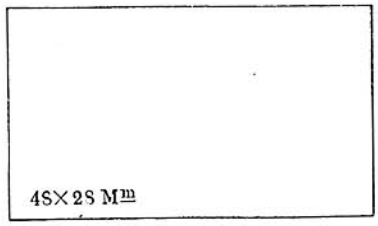	
	a) white crown-glass with ground edges, per 100	3.—
	b) „ „ „ „ unground edges, per 100 . . .	2.—
	c) best white plate-glass with ground edges, per 100 . .	4.
94	**Slips of the English Pattern** — 76×26 mm:	
	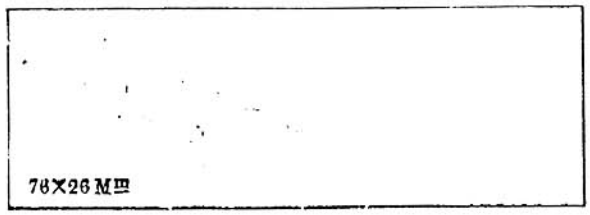	
	a) white crown-glass with ground edges, per 100	3.50
	b) „ „ „ „ unground edges, per 100 . . .	2.50
	c) best white plate-glass with ground edges, per 100 . .	7.50

No.		Marks
95	**Slips of extra large size** — 87 × 37 mm:	
	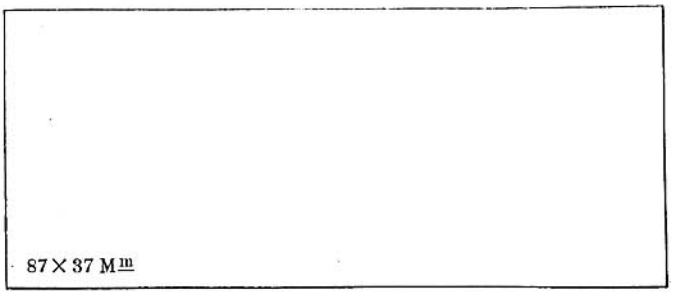	
	a) white crown-glass with ground edges, per 100	5.—
	b) „ „ „ „ unground edges, per 100 . . .	3.50
	c) best white plate-glass with ground edges, per 100 . .	9.—
96	**Hollow Slips:**	
	a) small pattern, 55 × 32 mm, of best make and finish, ground edges, each	0.50
	b) extra large, 87 × 37 mm, of best make and finish, edges ground and polished, 5 mm thick, each	1.—
97	**Slips with cemented glass rings,** for moist chambers 1 or 2 mm deep, each	0.80
98	**Covers, square:**	

size:	24	21	18	15	12 mm □
per 100 Mk.:	4.70	3.60	2.70	1.80	1.—.

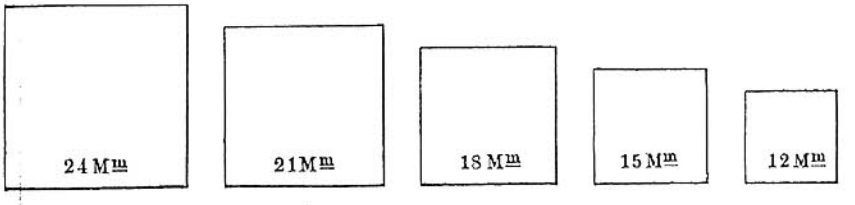

No. | *Marks*

99 **Covers, round:**

size:	24	21	18	15	12 mm	diameter
per 100 Mk.:	6.90	5.50	4.20	3.00	1.50.	

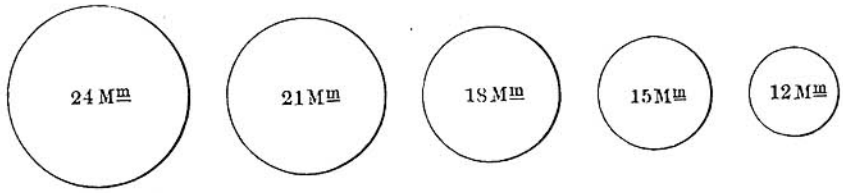

100 **Covers, oblong:**

size: $\frac{32 \times 24 \text{ mm}}{6.00}$ and $\frac{24 \times 21 \text{ mm}}{4.50.}$

per 100 Mk.:

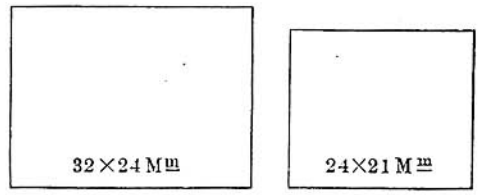

The thickness of the above covers varies between 0.15 and 0.22 mm; one third more must be added to the above prices for covers of given thickness.

Complete Microscopes.

For the convenience of the buyer we have compiled the following series of suitable and current combinations with the total price appended.

In ordering either of these sets it will be sufficient to quote the respective number and price.

1) Microscope:

Stand I[a] with mechanical stage . . . . . Mk. 400.—

Apochromatic Objectives:

16.0 mm, 0.30 n. ap.	8.0 mm, 0.65 n. ap.	4.0 mm 0.95 n. ap.	
100.—	130.—	180.—	Mk. 410.—
2.5 mm 1.25 n. ap.	(Water Immers.)		
300.—			„ 300.—
2.0 mm, 1.30 n. ap.	3.0 mm 1.40 n. ap.	(Homog. Immers.)	
400.—	500.—		„ 900.—
			„ 1610.—

Compensating Eye-pieces:

1,	2,	4,	8,	12,	18	
20.—	20.—	20.—	30.—	30.—	25.—	„ 145.—
6 with $^1/_1$ micron divisions (Micrometer Eye-piece No. 29)						„ 30.—

Projection Eye-pieces:

2,	4	
40.—	40.—	„ 80.—
Goniometer Eye-piece No. 40		„ 30.—
		„ 285.—
		Carried forward Mk. 2295.—

		Brought forward Mk.	2295.—
Apertometer No. 2	Mk.	80.—	
Test-plate No. 3	„	10.—	
Sliding Objective-changer No. 25 with 6 Objective-slides	„	70.—	
Case for 6 slides	„	7.—	
Stage Micrometer No. 26	„	10.—	
Screw Micrometer Eye-piece No. 30a	„	80.—	
Stage Screw Micrometer No. 31	„	120.—	
Crossed-line Micrometer No. 32	„	5.—	
Apparatus for counting blood corpuscles No. 34c	„	44.—	
Measures No. 36 and 37, 100 and 300 mm respectively	„	10.50	
Fully divided circle No. 39, 120 mm dia.	„	9.—	
Cover-glass Tester No. 41	„	36.—	
Camera No. 44	„	42.—	
Polariscope No. 48a (Divided Circle of the Goniometer Eye-piece No. 40)	„	39.—	
Series of Selenite and Mica Films No. 51	„	10.—	
Spectroscopic Eye-piece No. 53	„	165.—	
Microscope Lamp No. 59	„	30.—	
Saccharimeter No. 61	„	65.—	
Turn Table No. 63	„	9.—	„ 841.50

Apparatus for Mounting.

Dissecting Microscope:			
Dissecting Stand I	„	100.—	
Dissecting Series No. 76	„	40.—	
Aplanatic Lenses No. 79, × 6 and 10 à 15.—	„	30.—	„ 170.—
Lens Holder I	„	25.—	
with Brücke's Lenses No. 83 and 84	„	41.—	„ 66.—
Microtome No. 89*)	„	40.—	
Extra knife No. 92	„	5.—	„ 45.—
Packing			„ 8.50 Mk. 3426.—

2) Microscope:

Stand Ia without mechanical stage			Mk. 300.—
Apochromatic Objectives:			
16.0 mm, 0.30 n. ap. / 8.0 mm, 0.65 n. ap. / 3.0 mm 0.95 n. ap.			
100.— 130.— 200.—	Mk.	430.—	
2.5 mm (Water Immers.) 1.25 n. ap.			
300.—	„	300.—	
1.5 mm (Homog. Immers.) 1.30 n. ap.			
450.—	„	450.—	„ 1180.—
		Carried forward Mk.	1480.—

*) We are prepared to supply larger microtomes at manufacturer's prices (vide remark p. 111).

Brought forward Mk. 1480.—

Compensating Eye-pieces:

2,	4,	8,	12,	18			
20.—	20.—	30.—	30.—	25.—	Mk. 125.—		
6 with $^1/_1$ micron divisions (Micrometer Eye-piece No. 29)					„ 30.—	Mk. 155.—	

Revolving Nose-piece No. 24c	„ 35.—	
Stage Micrometer No. 26	„ 10.—	
Cover-glass Tester No. 41	„ 36.—	
Camera No. 44	„ 42.—	
Polariscope No. 48a	„ 54.—	
Series of Selenite and Mica Films No. 51	„ 10.—	„ 187.—

Apparatus for Mounting:

Dissecting Microscope:

Dissecting Stand I	„ 100.—		
Dissecting Series No. 76	„ 40.—		
Aplanatic Lenses No. 79, × 6 and 10 . . à 15.—	„ 30.—	„ 170.—	
Packing		„ 4.—	Mk. 1996.—

3) Microscope:

Stand IIa	Mk. 290.—		
Attachable mechanical stage	„ 75.—	Mk. 365.—	

Apochromatic Objectives:

16.0 mm	8.0 mm	4.0 mm			
0.30 n. ap.	0.65 n. ap.	0.95 n. ap.			
100.—	130.—	180.—	„ 410.—		
2.0 mm (Homog. Immersion) 1.40 n. ap.		(or 3.0 mm 1.40 n. ap.)	„ 500.—	„ 910.—	

Compensating Eye-pieces:

2,	4,	8,	12			
20.—	20.—	30.—	30.—	„ 100.—		
6 with $^1/_1$ micron divisions (Micrometer Eye-piece No. 29)				„ 30.—	„ 130.—	

Sliding Objective-changer No. 25 with 4 Objective-slides	„ 50.—	
Case for 6 slides	„ 7.—	
Camera No. 44	„ 42.—	
Polariscope No. 48a	„ 54.—	„ 153.—

Apparatus for Mounting.

Dissecting Microscope:

Dissecting Stand III	„ 50.—		
Dissecting Series No. 76	„ 40.—		
Aplanatic Lenses No. 79, × 6 and 10 . . . à 15.—	„ 30.—		
Extra Lens Holder for use with Diss. Stand III	„ 5.—	„ 125.—	
Lens Holder I	„ 25.—		
with BRÜCKE's Lens No. 83	„ 11.—	„ 36.—	
Hand Microtome No. 90	„ 18.—		
with Knife No. 92	„ 5.—	„ 23.—	
Packing		„ 3.50	Mk. 1745.50

4) Microscope:

Apochromatic Objectives:

16.0 mm	8.0 mm	4.0 mm			
0.30 n. ap.	0.65 n. ap.	0.95 n. ap.			
100.—	130.—	180.—	Mk. 410.—		
2.0 mm (Homog. Immers.)					
1.30 n. ap.			„ 400.—		

Compensating Eye-pieces:

2,	4,	8,	12			
20.—	20.—	30.—	30.—	„ 100.—		
6 with $^1/_1$ micron divisions (Micrometer Eye-piece No. 29)				„ 30.—		
Sliding Objective-changer No. 25 with 4 Objective-slides				„ 50.—		
Case for 6 slides				„ 7.—		
Stage Micrometer No. 26				„ 10.—		
Camera No. 44				„ 42.—	Mk. 1049.—	

This outfit costs with:

a) **Stand I^a** with mechanical Stage		Mk. 400.—	
	Packing	„ 3.50	Mk. **1452.50**
or			
b) **Stand II^a**		„ 290.—	
Attachable mechanical Stage		„ 75.—	
	Packing	„ 3.—	Mk. **1417.—**
or			
c) **Stand IV^a**		„ 200.—	
Iris Diaphragm		„ 15.—	
Attachable mechanical Stage		„ 75.—	
	Packing	„ 3.—	Mk. **1342.—**

5) Microscope:

Apochromatic Objectives:

16.0 mm	3.0 mm			
0.30 n. ap.	0.95 n. ap.			
100.—	200.—	Mk. 300.—		
1.5 mm (Homog. Immers.)				
1.30 n. ap.		„ 450.—		

Compensating Eye-pieces:

2,	4,	8,	12			
20.—	20.—	30.—	30.—	„ 100.—		
6 with $^1/_1$ micron divisions (Micrometer Eye-piece No. 29)				„ 30.—		
Revolving Nose-piece No. 24^b				„ 27.—	Mk. 907.—	

This outfit costs with:

a) **Stand I^a** without mechanical Stage		Mk. 300.—	
with „ „		„ 100.—	
	Packing	„ 3.—	Mk. **1310.—**
or			
b) **Stand II^a**		„ 290.—	
	Packing	„ 2.—	Mk. **1199.—**
or			
c) **Stand IV^a**		„ 200.—	
Iris Diaphragm		„ 15.—	
Attachable mechanical Stage		„ 75.—	
	Packing	„ 2.50	Mk. **1199.50**

6) Microscope (*Outfit of the Prussian Military Hospitals*):

Achromatic Dry Objectives:

AA, DD

30.— 54.— . . . . . Mk. 84.—

Apochromatic Homog. Immers. Objectiv:

2.0 mm / 1.30 n. ap. . . . . „ 400.—

Huyghenian Eye-pieces:

2, 4 . . . . . à 7.— „ 14.—

Compensating Eye-pieces:

4, 8 / 20.— 30.— . . . . . „ 50.—

6 with $^1/_1$ micron divisions (Micrometer Eye-piece No. 29) „ 30.—

Revolving Nose-piece No. 24b . . . . . „ 27.— Mk. 605.—

This outfit costs with:

a) **Stand Ia** without mechanical Stage . . . . . „ 300.—

Packing „ 3.— Mk. 908.—

or

b) **Stand IIa** . . . . . „ 290.—

Packing „ 2.— Mk. 897.—

or

c) **Stand IVa** . . . . . „ 200.—

Iris Diaphragm . . . . . „ 15.—

Attachable mechanical Stage . . . . . „ 75.—

Packing „ 2.50 Mk. 897.50

7) Microscope:

Achromatic Objectives:

A, C, E

24.— 36.— 66.— . . . . . Mk. 126.—

$^1/_{12}$ 1.30 n. ap. (Homog. Immers.) . . . . . „ 300.—

Huyghenian Eye-pieces:

2, 4 . . . . . „ 14.—

3 with Micrometer (Micrometer Eye-piece No. 28) . . „ 15.—

Revolving Nose-piece No. 24c . . . . . „ 35.—

Camera No. 44 . . . . . „ 42.— Mk. 532.—

This outfit costs with:

a) **Stand Ia** without mechanical Stage . . . . . „ 300.—

Packing „ 3.— Mk. 835.—

or:

b) **Stand IIa** . . . . . „ 290.—

Packing „ 2.— Mk. 824.—

or

c) **Stand IVa** . . . . . „ 200.—

Iris Diaphragm . . . . . „ 15.—

Packing „ 2.— Mk. 749.—

8) Microscope:

Achromatic Objectives:

a², A, C, F

12.— 24.— 36.— 84.— . . . . . „ 156.—

Carried forward Mk. 156.—

Brought forward Mk. 156.—

Water Immers. Objectives:

D*, J

75.— 144.— . . . . . „ 219.—

Huyghenian Eye-pieces:

2, 4 . . . . . à Mk. 7.— „ 14.—

3 with Eye-piece Micrometer (Micrometer Eye-piece No. 28) „ 15.—

Revolving Nose-piece No. 24b . . . . . „ 27.—

Camera No. 44 . . . . . „ 42.— Mk. 473.—

This outfit costs with:

a) **Stand Ia** without mechanical Stage . . . . . „ 300.—

Packing „ 3.— Mk. 776.—

or

b) **Stand IIa** . . . . . „ 290.—

Packing „ 2.— Mk. 765.—

or

c) **Stand IVa** . . . . . „ 200.—

Iris Diaphragm . . . . . „ 15.—

Packing „ 2.— Mk. 690.—

*9) **Microscope** (greatly patronized by physicians, surgeons and veterinarians):*

Achromatic Objectives:

AA, DD

30.— 54.— . . . . . Mk. 84.—

$^{1}/_{12}$ 1.20 (Homog. Immers.) . . . . . „ 160.—

Huyghenian Eye-pieces:

2, 4 . . . . . à Mk. 7.— „ 14.—

Revolving Nose-piece No. 24b . . . . . „ 27.— Mk. 285.—

This outfit, representing according to Prof. Koch of Berlin the minimum required for bacteriological investigations, costs with:

a) **Stand Ia** without mechanical Stage . . . . . „ 300.—

Packing „ 3.— Mk. 588.—

or

b) **Stand IIa** . . . . . „ 290.—

Packing „ 2.— Mk. 577.—

or

c) **Stand IVa** . . . . . „ 200.—

Iris Diaphragm . . . . . „ 15.—

Packing „ 2.— Mk. 502.—

*10) **Microscope** (for the same purposes, but a little cheaper than outfit 9):*

Achromatic Objectives:

A, D

24.— 42.— . . . . . Mk. 66.—

$^{1}/_{12}$ 1.20 (Homog. Immers.) . . . . . „ 160.—

Huyghenian Eye-pieces:

2, 4 . . . . . à Mk. 7.— „ 14.—

Revolving Nose-piece No. 24b . . . . . „ 27.— „ 267.—

This outfit costs with:

a) Stand I[a] without mechanical Stage		Mk. 300.—	
Packing		„ 3.—	Mk. 570.—
or			
b) Stand II[a]		„ 290.—	
Packing		„ 2.—	Mk. 559.—
or			
c) Stand IV[a]		„ 200.—	
Iris Diaphragm		„ 15.—	
Packing		„ 2.—	Mk. 484.—
or			
d) Stand IV[b]		„ 150.—	
Illuminating Apparatus No. 18 with Iris Diaphragm		„ 40.—	
Packing		„ 2.—	Mk. 459.—
or			
e) Stand V[a] (see remark on p. 46 regarding applicability of immers. systems with these stands)		„ 120.—	
Iris Diaphragm		„ 15.—	
Packing		„ 2.—	Mk. 404.—
or			
f) Stand VII (see remark on p. 46 regarding applicability of immers. systems with these stands)		„ 60.—	
Illuminating Apparatus No. 19		„ 10.—	
Small Iris Diaphragm		„ 12.—	
Packing		„ 1.20	Mk. 350.20

11) Microscope:

Achromatic Dry Objectives:

A, D, F

24.— 42.— 84.— . . . . . Mk. 150.—

Huyghenian Eye-pieces:

2, 4 . . . . . à Mk. 7.— „ 14.—

Revolving Nose-piece No. 24[b] . . . . . „ 27.— Mk. 191.—

This outfit costs with:

a) Stand IV[a]		„ 200.—	
Iris Diaphragm		„ 15.—	
Packing		„ 1.80	Mk. 407.80
or			
b) Stand IV[b]		„ 150.—	
Packing		„ 1.80	Mk. 342.80
or			
c) Stand V[a]		„ 120.—	
Packing		„ 1.80	Mk. 312.80
or			
d) Stand VI		„ 65.—	
Packing		„ 1.—	Mk. 257.—

12) Microscope:

Achromatic Dry Systems:

A, C, E

24.— 36.— 66.— . . . . . Mk. 126.—

Huyghenian Eye-pieces:

2, 4 . . . . . à Mk. 7.— „ 14.—

Revolving Nose-piece No. 24[b] . . . . . „ 27.— Mk. 167.—

This outfit costs with:

a) Stand IV[a]		„ 200.—	
Iris Diaphragm		„ 15.—	
Packing		„ 1.80	Mk. 383.80

or

b) **Stand IV^b** . . . . . Mk. 150.—

Packing „ 1.80 Mk. **318.80**

or

c) **Stand V^a** . . . . . „ 120.—

Packing „ 1.80 Mk. **288.80**

or

d) **Stand VII** . . . . . „ 60.—

Packing „ 1.— Mk. **228.—**

13) Microscope:

Achromatic Dry Objectives:

a^2, B, D

12.— 30.— 42.— . . . . . Mk. 84.—

Huyghenian Eye-pieces:

2, 4 . . . . . à Mk. 7.— „ 14.— Mk. 98.—

This outfit costs with:

a) **Stand VII** . . . . . „ 60.—

Packing „ 1.— Mk **159.—**

or

b) **Stand IX** . . . . . „ 40.—

Packing „ 1.20 Mk. **139.20**

or

c) **Hand Microscope No. 16** . . . . . „ 15.—

Packing „ — Mk. **113.—**

14) Microscope for the detection of Trichina

after Professor JOHNE:

Stand IX with specially constructed Triple Objective and **2** Eye-pieces; **6** Amplifications from **30—190** . . . . . „ 70.—

Packing „ 1.20 Mk. **71.20**

Index.

page

a, a*, A, AA-Objectives . . 20—22
Achromatic Objectives . . . 19—22
" " combined with Compensating Eye-pieces . 20
Accessory arrangements for testing the fundamental properties of microscopical objectives . 24—25
Apertometer 24
Adjustment, coarse, fine 29
Analysers and Polarisers . . . 80
Apochromatic Objectives:
Introduction of the " 1
Properties of the " . . . 7—11
Durability of the " 10
New constructions . . . . 11—13
Price list 14
Magnifications with the Compensating Eye-pieces . . . 16—17
Apparatus for counting blood corpuscles after THOMA . . . 75
Apparatus for photo-micrography . . . . . 92—99
Arrangements for Polarisation 79—80
Axial images, Eye-piece for observation of 56, 80

B-Objective . . . . . 21—22
BB-Objective 20
Babuchin, Stands . . . . 42—45
Bertrand's Eye-piece 56
Bull's Eye Lenses 87

page

Browning, Hand Spectroscope after 87
Body-length for which the objectives are adjusted 4
— of the stands 30

C-Objective . . . . . 21—22
CC-Objective 20
Camera lucida . . . . 56, 77—78
Cap bottles for immersion oil . . 21
Cases for the stands 31
Cedar-wood oil 21
Centering Arrangement for the illuminating apparatus 59, 61
Circles, fully divided 76
Clamping ring 48
Compensating Eye-pieces . 15—17
Condenser, achromatic 62
Condenser systems . . . 14, 58, 61
Correction of the spherical and chromatic aberrations . . . 1, 5, 7, 8
Correction Adjustment 5
Covers . . . . . 14, 113—114
Cover-glass gauge 76
Crossed-line Micrometer 74
Crossed-line Stage Micrometer . 74
Cylinder diaphragms . 30, 32, 58, 61

D, DD, D*-Objectives . . 19—22
Diaphragms to insert in the Eye-pieces after EHRLICH 74
Diffraction Plate after ABBE 86—87

page

Distance of object 4
Dissecting knives etc., set of . . 111
„ **lenses** 106
„ **stands** . . . . 100—104
Divided Circles 76
Drawing apparatus . . . 56, 77—78
Draw Tubes with millimeter scale 29

E-Objective . . . . . 21—22
Engelmann, Micro-spectral Objective 64
Micro-spectral Photometer . . . 82
Eye-pieces:
Axial-image „ 56, 80
BERTRAND'S „ 56
Compensating „ . . . . 15—17
HUYGHENIAN „ . . . . 22—23, 56
Orthoscopic „ 23
Projection „ 18
Stereoscopic „ 85
Spectroscopic „ 56, 81
Setting of Eye-pieces 15
Numeration „ 16
Eye-piece Micrometer 56, 70
Engraving of names on stand . . 31

F-Objective . . . . . 21—22

G-Objective (Water Immersion) . . 20
Glass globe with stand 87
Goniometer Eye-piece 56, 76

H-Objective (Water Immersion) 21—22
Haemacytometer after THOMA . . 75
Hand Microscope 48
Hand Spectroscope after BROWNING 87
Heating arrangement for warming microscopical objects 88
Huyghenian Eye-pieces . . 22—23
— with crossed lines 56
Homogeneous Immersion:
Objectives for „ 6, 14, 21
Fluid for „ 6, 21

page

I-Objective (Water Immersion) 21—22
Illumination of the Objects . . 30
Illuminating apparatus:
for white light 30
for spectroscopically decomposed light 63
for monochromatic light after HARTNACK 63
after ABBE . . . . . 57—61
simplified 61
small of 1,0 ap. 61
Image distance of the Projection Eye-pieces 18
Immersion fluid 6
Immersion Objectives, achromatic 6, 21
„ „ , apochromatic 6, 14
Iris diaphragm . . . . . 60—61

K-Objective (Water Immersion) . . 20
Knife for Microtomes 111

L-Objective 20
Leather travelling cases 31
Lenses . . . . . 106—109
Lens Holders 105

Magnification:
Initial magnification of the apochromatic Objectives . . . 9, 14
Eye-piece magnification . 16, 17, 23
Magnifiers . . . . . 106—109
Mahogany cases for objectives . . 20
Measure on brass 75
„ „ plate-glass 76
Measuring and counting apparatus 70
Measuring Eye-pieces . . . 71—73
Metal name plates 31
Micro burner 90
Micrometer movement of the stands 29
Micrometer:
Stage Micrometer / Eye-piece „ 70
Stage Screw Micrometer 73
Screw Micrometer Eye-piece 56, 73
Crossed-line Micrometer 74
Crossed-line Stage Micrometer . . 74

page

Micrometer Eye-piece 56, 71
Microscope Lamp 87
Micro-spectral Objective after ENGELMANN 64
Micro-spectral Photometer . . 56, 82
Microtomes . . . . . 110—111
Monobromide of Naphthaline . . 14

Nachet, reversing prism 86

Objectives:
General Properties . . . 1—3, 4—6
Achromatic Objectives . . 19—22
Apochromatic „ . . . . . 7—14
Changing arrangements for „ 67—69
Objective magnification . . . 9, 14

Photo-micrography:
Apparatus for „ . . . . . 92—99
Stand for „ 36
Polarisation arrangements . . 79—80
Projection apparatus . . . 92—99
„ **Eye-pieces** 18
„ **Systems** . . . . 11—12

Reversing prism after NACHET . . 86
Revolving nose-piece 68
Rollet, Spectro-Polariser after . . 66

Saccharimeter 88
Screw Micrometer Eye-piece 56, 73
Series of Selenite and Mica films 56, 80
Sliding Objective-changer . 68—69
Slips . . . . . 14, 112—113
Sliding Ruler 91
Specimens, microscopical 111
Specialkatalog of photo-micrography 92

page

Spectroscopic Eye-pieces 56, 81—84
Spectro-polariser after ROLLET . . 66
Spectroscope, Hand after BROWNING 87
Standard Thread 6
Stage Micrometer 70
Stages:
General remarks . . . . 26—28
Mechanical Stage for Stand I^a . 34
Attachable, mechanical stage . . 90
Stands:
General remarks . . . . 26—31
Large Stands . . . . . 32—37
medium „ . . . . . 38—45
small „ . . . . . 46—48
for crystallographic and petrological researches . . . . . 50—55
Stauroscopic Plate 56
Stops for Eye-pieces 74

Table of Magnifications
of the Apochromatic Objectives with the Compensating Eye-pieces 17
of the Achromatic Objectives with the Huyghenian Eye-pieces . . 22
Test-plate after ABBE 25
Test-tube holder 91
Thickness of Cover, for which the Objectives are corrected 5
— Measurement of the same by means of the Micrometer screw . . . 29
Thoma, Haemacytometer after . . 75
Trichina, Microscope for dissecting 48
Turn Table (Tournette) 90

Working Distance 4
Working Eye-pieces 16
Warm Chamber 88

Carl Zeiss, Optische Werkstätte, Jena.

The Catalogue of photographic Objectives

is being issued.

The Catalogue of mechanical and optical measuring Apparatus

is being prepared.