PRICES NOT VALID

CARL ZEISS : JENA

Microscopes and Accessories for the Microscope

CARL ZEISS
JENA

MÉDIATHÈQUE
La Villette

35th Edition

1913

Reference: *Mikro 184.*

Terms.

Any of the Items specified in this Catalogue, unless stated to the contrary, will be supplied singly or in any desired combination at the prices appended to the respective items. All instruments and appliances made by us bear the name and address of our firm engraved upon them and are not supplied otherwise.

The Prices appended to the Stands apply to the bare stand together with its case only and do not include eyepieces, objectives or nosepieces. Suitably equipped microscopes will be found at the end of the catalogue.

The price of a **completely equipped microscope** is in all cases the aggregate of the prices of the component items.

All prices are strictly nett for prompt cash and do not include the cost of packing and carriage from the works.

All orders (excepting those of our regular business friends) should be **accompanied by a remittance.**

All goods are forwarded, carefully and suitably packed, **at the expense and risk of the consignee.** In the absence of specific instructions goods will be forwarded by what we regard as the most advantageous route and every precaution will be taken to ensure good and prompt delivery.

In all cases where any doubt can arise the **railway station** nearest the consignee's address should be stated.

The values of the goods are covered under our open policy without liability for breakage. **Packages which bear external marks of damage should be accepted under protest with the remark „Not Examined", otherwise the consignee will forfeit his right to claim upon the carriers.**

Names and Addresses should be written **plainly** on all enquiries and orders; and, to obviate errors, the edition or year of publication of this catalogue should be specified.

In telegraphic orders use should be made of the Codewords appended to the required item. In the event of any article being required in multiples it is advisable to telegraph the required number in words rather than in numerals.

Jena, 1913. **Carl Zeiss.**

Telegraphic Address: **Zeisswerk Jena.**

Branch Depôts (Wholesale, Retail and Minor Repairs):

London W., 13—14, Great Castle Street, Oxford Circus.	Telegr. Address: *Zeisswerk Wesdo London.*
Berlin W. 9, Potsdamerstraße 139.	Telegr. Address: *Zeisswerk Berlin.*
Hamburg, Rathausmarkt 8.	Telegr. Address: *Zeisswerk Hamburg.*
Paris 3ième, 6, rue aux Ours (prolongement de la rue Etienne Marcel).	Telegr. Address: *Zeiss Paris.*
Milan, Piazza del Duomo 19.	Telegr. Address: *Carlzeis Milan.*
St. Petersburg, Kasanskaja Ulitza 2.	Telegr. Address: *Mikro Petersburg.*
Tokyo, Tsukiji 33a.	Telegr. Address: *Zeiss Tokyo.*
Vienna IX/3, Ferstelgasse 1, Ecke Maximilianplatz.	Telegr. Address: *Zeisswerk Vienna.*

Branch Works: **Jena, London, Riga, Vienna, Győr.**

CARL ZEISS JENA

Contents.

page

Introduction 5

I. Objectives and Eyepieces

A. General Features 6
B. Apochromatic Objectives 13
C. Compensating Eyepieces 17
D. Achromatic Objectives 20
E. Huyghenian and Orthoscopic Eyepieces 23
F. Tables of Magnification 24

II. Microscope Stands

A. The Illumination of the Object 27
B. Object Stages 39
C. Focussing Mechanism 46
D. Lens Changing Devices 49
E. Stands of Various Designs 52

III. Accessories for the Microscope

A. Drawing Appliances 78
B. Measuring and Counting Devices 84
C. Apertometer, Test Plate, Diffraction Apparatus 92
D. Attachments for Microscopic Observation with Polarised Light 94
E. Attachment for Microscopic Observation with Spectroscopically Decomposed Light 97
F. Appliances for Observation at Raised Temperatures . 99
G. Various Accessories 101
H. Appliances for the Artificial Illumination of Microscopic Objects 107

IV. Bell Glasses, Object Slides, Cover Glasses 111

V. Completely Equipped Microscopes 113

VI. Index 124

Introduction.

In prefacing this new edition of our General Catalogue of Microscopes and Accessories for the Microscope it affords us considerable gratification to state that in the face of the pronounced rise in the cost of labour and materials which has made itself felt during the last few years, we have on the whole been able to maintain our former prices by dint of simplified and improved methods of manufacture. The present 35th Edition of our Catalogue specifies a very small number of articles the prices of which have experienced a slight advance. In the case of a few items we have indeed been enabled to lower the price.

This is notably the case with the achromatic $\frac{1}{12}$" oil immersion lens, as hitherto supplied. We have reduced the numerical aperture of this objective by an insignificant amount, viz. from 1.30 to 1.25, the latter being the guaranteed minimum value of its numerical aperture, which will as a rule be exceeded. This very slight diminution of the numerical aperture has enabled us to reduce the price of the objective by M. **25.—**.

In the place of the original oil-immersion lens of N. A. 1.30 we have introduced a new combination which contains fluorite in its composition and occupies an intermediate position between the achromatic and apochromatic lenses. Its price is only M. **15.—** in excess of that of the original $\frac{1}{12}$" oil-immersion lens without fluorite components.

Of additions to our stands and their fittings we have listed in this edition the **Inclinable Class Microscope Stand V** and a few new stage patterns for the simpler stands. The **Binocular Dissecting Stand XB** is made in its original form as well as in a **much simplified** form. The Substage and other **Illuminating Attachments** to the Microscope have undergone considerable changes, which have in a large measure been occasioned by the developments in the dark-ground method of observation.

The section relating to **Dark Ground Illumination** has been entirely remodelled and considerably extended in keeping with the growing practical importance of this method. Applications of the principle of the ultra-microscope proper are briefly referred to, their full description being contained in separate booklets. The same applies to apparatus for observation and photo-micrography with ultra-violet light. The Luminescence Microscope referred to in this Catalogue is likewise described in a separate publication.

The Petrological Microscopes and their Accessories as well as the Corneal Microscope have been eliminated from this edition. Petrological Microscopes will form the subject matter of a separate catalogue, whilst the Corneal Microscope has been transferred to to our new Medico-optical Instrument Department.

---

*An asterisk * denotes that the instrument or device so marked has originated in our Works, having either been invented or first devised by us for the purpose named or at all events first made by us in the form here described.*

I. Objectives and Eyepieces.

A. General Features.

As the outcome of long continued investigations and experiments pursued by Dr. SCHOTT and Prof. ABBE the laboratories of the Technical Glass Works of Messrs. SCHOTT & CO., of Jena, which had been established with our cooperation, produced in 1884 a series of new optical glasses endowed with more favourable properties in the matter of refraction and dispersion for the computation of microscope lenses than the then existing crown and flint glasses which they were destined to supersede.

The use of these glasses and the application of new formulae which they rendered practicable has, since 1886, enabled us to produce microscope objectives in which the chromatic and spherical aberrations are reduced to a much higher degree of correction and all rays accordingly brought to a focus in the plane of the image in a much more perfect manner than had previously been attainable. At the same time we devised for use with these improved objectives a new type of eyepieces as a means of securing an approximately uniform degree of achromatic correction and definition throughout the entire field of view, apart from a few other useful qualities of minor importance.

The lenses and eyepieces of a higher order of correction so obtained were first made known in a catalogue published in 1886 and were respectively named Apochromatic Objectives, Compensating Eyepieces, and Projection Eyepieces. Since that time their merits have met with universal recognition and they have proved eminently valuable in the service of scientific research.

In addition to the objectives and eyepieces of the apochromatic series we continue to make our Achromatic Objectives together with their appropriate eyepieces. Whilst there can be no doubt that in the more exacting departments of microscopic research the apochromatic objectives are increasingly superseding the achromatic series, the bulk of the ordinary work of microscopic investigation and study does not demand the highest attainable degree of optical perfection, and for these purposes the „achromatic“ microscope will continue all that need be required, provided the instrument is good of its kind and the work of an accomplished maker. The objectives and eyepieces of the achromatic series have this advantage that, being of a much simpler construction, excellent lenses

of this order can be produced at considerably lower prices than is possible in the case of the apochromatic lenses, which are much more complex and make higher demands upon the maker's skill.

Whilst the new glasses, in conjunction with fluorite, were being employed to produce lenses of a higher order of correction, these same materials, in conjunction with improved formulae, were made a means of perfecting the achromatic lenses within their utmost limits. We should accordingly have been justified in applying to the higher powers of this series, in which the advance in the optical quality achieved by this means was very marked, such appellations as „Semi-apochromatic Objectives" or, in some instances, „Fluorite Lenses", which have found favour with other makers.

Recently a third type has been added to the Apochromatic and Achromatic orders, that of the so-called Monochromatic Objectives, which have been computed by Dr. von ROHR. The characteristic features of these objectives are that the rays are brought to a focus in a very perfect manner with respect to any specified wavelength, the combination being accordingly entirely devoid of chromatic correction, and that the system is made up of uncemented lenses, all of which may be composed of the same material. Since these objectives are entirely devoid of chromatic correction it follows that they may be employed with purely monochromatic light only. At present these lenses are made exclusively for the purposes of photo-micrography with ultra-violet light in conjunction with the apparatus referred to in the Introduction, since the monochromatic nature and physical properties of the light render these lenses peculiarly useful. They are for use in this way corrected with respect to a wave-length of 275 $\mu\mu$, and all lenses are made of fused quartz. For special use with Monochromatic Objectives computed for ultra-violet light we supply Quartz Eyepieces, the lenses of which are made of pebble. Detailed information on this subject will be found in an article by A. KOEHLER on „Mikrophotographische Untersuchungen mit ultra-violettem Licht", Z.-S. f. wiss. Mikr. **21,** 129—165 and 273—304, 1904.

All our objectives are produced in our workshops in accordance with the system introduced by Prof. ABBE in 1868, by virtue of which all the constructive elements of an objective are predetermined by strict computation before its manufacture is attempted. This system furnishes the only means of producing under competent scientific control and under organised conditions of manufacture large numbers of optical combinations of the utmost degree of perfection.

This system of a complete and rigorous mathematical computation of every element which enters into the construction of the lens combined with exact methods of working and organised control of each phase of manufacture does away with any of the incertainties appertaining to the trial-and-error method and thereby ensures an extraordinary degree of uniformity in the quality of our objectives, high as well as low powers, whilst the chances of inferior objectives being turned out are entirely eliminated. All objectives are free from spherical aberration up to the marginal zones (assuming, of course, that cover-glasses of the correct thickness are used) and are of the highest attainable degree of chro-

matic correction. In their computation stress has been laid upon the correction of extra-axial aberrations and the quality of a flat field.

Free Working Distance. In view of the importance of a good Working Distance for the convenient and safe employment of the higher powers, particular attention has been given to this factor in calculating the formulae of the various glasses. Our high power objectives have accordingly unusually long working distances in relation to their focal lengths and apertures (see Tables on pp. 15, 22 and 26).

Tube Length. The whole of the objectives specified in this Catalogue, excepting where supplied in special mounts, are adjusted for a mechanical tube-length of 160 mm reckoned from the shoulder of the objective screw to the upper edge of the draw-tube which supports the eyepiece collar. In Fig. 1 this length is indicated by the letter **T**. A different tube-length is required in the case of objectives set in special mounts, such as objectives in short mounts for use with the Vertical Illuminator.

On the larger stands of our make the tube-length may be read off the scale engraved on the draw-tube. When any fitting intervenes between the tube and the objective, such as a revolving nosepiece or a sliding objective changer, the draw-tube should be pushed in by an amount equal to the depth of the intervening fitting so as to restore the distance of 160 mm between the shoulder of the objective and eyepiece collar.

In the case of several eyepieces of special construction, such as drum micrometer eyepieces, screw micrometer eyepieces, spectroscopic eyepieces and others, the eyepiece lies some distance above the edge of the draw-tube. When one of these eyepieces is used as well as an objective changer or similar fitting the resulting tube-length may remain too great even when the draw-tube is pushed in as far as it will go. When this contingency arises the objective should either be screwed direct to the tube or special short eyepiece sockets should be screwed into the upper end of the draw-tube (as in the case of Stands I) or into the body tube in the place of the draw-tube.

The low power achromatic objectives, up to **C** inclusive, may without appreciable prejudice to their optical performance be used on the 10-inch tubes of the large English models.

All other objectives, especially those of the apochromatic series, perform more or less imperfectly on a 10-inch tube and should be specially adjusted for this purpose.

Objectives intended to be used on tube lengths other than the standard length of 160 mm should be ordered accordingly.

Thickness of the Cover-glass. All objectives in fixed mounts, unless required otherwise, are corrected for cover-glasses of a mean thickness ranging from 0.15 to 0.20 mm. To obtain perfect definition with cover-glasses of this standard thickness the object should be in immediate contact with the under-surface of the cover-glass. A stratum of any appreciable thickness of the embedding medium intervening between the object and the cover-glass influences the result much in the same manner as a departure from the proper cover-glass thickness, unless the refractive index of the medium happens to be the same as that of the medium which separates the cover-glass from the front lens of the objective.

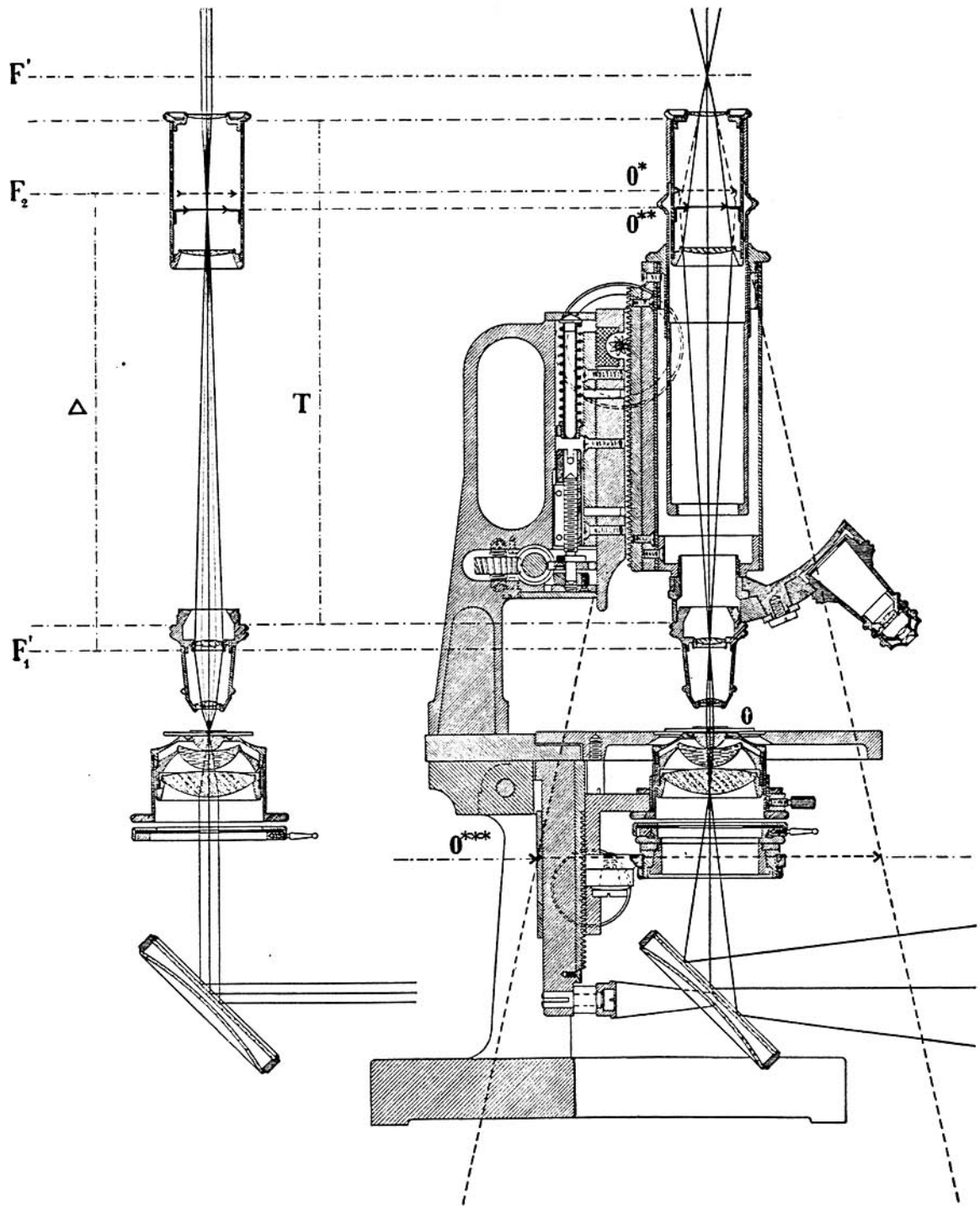

A Fig. 1. (1/2 Full Size) B

A: Diagram of the path of the rays initially proceeding from a point object situated in the anterior focal plane of the entire microscope system. **B:** Section taken through Stand **III** and diagram of extreme rays bounding the field of view. $\mathbf{F_1'}$: Posterior focal plane of the Objective AA; $\mathbf{F_2}$: Anterior focal plane of the Huyghenian Eyepiece No. 2; **F':** Posterior focal plane of the microscope as a whole. **T:** Mechanical tube length; △: optical tube length.

For further information the reader is refered to our leaftet Mikro 222!

CARL ZEISS JENA

Objectives required to be adjusted for a cover-glass differing from the usual thickness or intended for use without a cover-glass should be ordered accordingly.

All high power objectives, from the Apochromatic **8 mm** and the Achromatic Objective **D** upwards, with the exception of the oil-immersion lenses, have the cover-glass thickness which gives the best definition marked upon the lens mount in decimal fractions of a millimetre. Any departure from the cover-glass thickness so marked is attended with a more or less appreciable deterioration of the spherical correction, and it may be noted that

an **excessively thin** cover-glass produces spherical **under-correction,** whilst an **excessively thick** cover-glass produces spherical **over-correction.**

For ordinary observation with the **8-mm** Apochromatic and the Achromatic Objective **D** it is generally sufficient to roughly judge the thickness of the cover-glass by the eye. Finer observations and the use of objectives of higher power demand a more careful selection of cover-glasses of the appropriate thickness with the aid of a Cover Glass Gauge (see page 90). To examine with lenses of this kind an object mounted under a cover-glass which has not the prescribed thickness, the influence which the excessive or deficient thickness of the cover-glass exercises upon the definition can within certain limits be compromised by altering the tube-length. One may proceed in this way:

With a cover-glass of **deficient** thickness **extend** the tube
„ „ „ „ **excessive** „ **shorten** „ „

This expedient is particularly useful as a means of obtaining perfect definition in fine observations with fixedly mounted apochromatic objectives of large apertures. The correct tube length for each objective and a progression of cover-glass thicknesses is best ascertained with the aid of a Test Plate (see page 93).

In these cases it is, however, much more convenient to work with objectives fitted with a Correction Collar. With the Achromatic Objectives **F** and **J** digressions from the mean cover-glass thickness can be compensated by means of the correction collar only, since these objectives are less markedly affected by differences in the tube length than objectives of longer foci.

A simple expedient for ascertaining with approximate accuracy the cover-glass thickness of a mounted object with the aid of our stands of large and intermediate size will be found described on page 48.

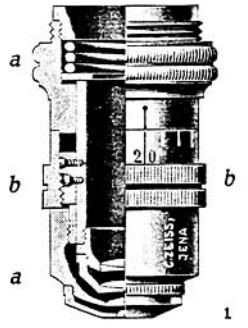

Fig. 2.

Objective fitted with a Correction Collar.

The correction ring *bb* serves to alter the distance which separates the two upper doublets from the lower single lenses secured within the fixed mount *aa*.

(Full Size).

Objectives with Correction Collars (Fig. 2). The movable collar *(bb)* is graduated in terms of hundredths of a millimetre, and an index on the fixed part of the mount supplies a reading of the correct cover-glass thickness to use in any given position of the collar.

The correction for the proper cover-glass thickness should be applied with the utmost care — especially in the case of the **4 mm** and **3 mm** apochromatic dry lenses and the **2.5 mm** water immersion lens — otherwise the performance of the lens will suffer seriously.

The **Oil Immersion Objectives** are supplied in fixed mounts only, since their optical performance is within wide limits independent of the cover-glass thickness, whilst on the other hand any alteration in the relative distances of the component lenses would interfere with the optical correction of the system as a whole.

The **Immersion Fluid** which we recommend for use with our oil immersion lenses and which we have used form the outset is slightly thickened cedar wood oil (From Juniperus virginiana). Users of our lenses will do well to eschew any oil derived from other sources as they run the risk that the fluid may differ in its refractive and dispersive properties from that supplied by us, in which case the optical performance would fall widely short of the attainable standard.

Oil immersion lenses should always be carefully cleaned immediately after use. To this end the adhering oil should be soaked up with a piece of linen or filter paper and the remaining oil carefully removed with the aid of a soft piece of linen moistened with a little benzine or xylol.



a Fig. 3 b

Nos. 11.3000 and 11.3010 Immersion Oil Bottles.
(½ Full Size).

The Immersion Oil Bottles shown in Fig. 3, a and b, are useful and convenient contrivances for keeping and applying the immersion oil. In the No. **11.3000** pattern the cap and rod of the bottle are made of glass, whilst in the No. **11.3010** variety the cap is of metal. This latter pattern has taken the place of a similar bottle, originally devised by MACH, and holds only a small quantity of oil, which is a useful feature in view of the fact that larger quantities are liable to resinify. The outer glass vessel may be filled with benzine or xylol for cleaning lenses, cover-glasses, etc. Short Directions *(Mikro 260)* accompany each Immersion Oil Bottle.

No.		Marks	Codeword
11.3000	**Immersion Oil Bottle with Glass Cap** . . .	**1.—**	*Miaba*
11.3010	**Immersion Oil Bottle with Metal Cap** . . .	**1.50**	*Miabais*
11.3015	**Cedar Wood Oil,** 15 grammes, in plain bottle .	**0.75**	*Miabamos*

The price of our oil-immersion objectives includes an Immersion Oil Bottle of the No. **11.3010** pattern and a 15-gramme bottle of Cedar Wood Oil.

The term **Numerical Aperture** (N. A.), or Aperture for short, was introduced by ABBE in 1873 in the course of his theoretical investigations. The magnitude of the numerical aperture is determined by the equation

$$N.\,A = n.\,sin\,u,$$

n being the refractive index of the medium contained between the cover-glass and the front lens of the objective, and u the semi-apertural angle of the system.

The numerical aperture of an objective supplies a measure of all its essential qualities. For a given magnification, other things beings equal, the **Brightness of the Image** is proportional to the square of the numerical aperture; the **Resolving Power** is directly proportional to it; the **Depth of Focus,** or **Power of Differentiating Depths** within any given medium is proportional to the contangent of the semi-apertural angle of the objective (ABBE, Gesammelte Abhandlungen, I, 267, 354, 365, 366, Jena 1904), and CZAPSKI, Theorie der optischen Instrumente, Second Edition, 245, 254, Leipzig 1904).

The magnitude of the numerical aperture governs the limits of the **effective** or **useful magnification** of the microscope. By this we understand, on the one hand, the least magnification which the microscope should afford in order that a normal-sighted observer may see all that the microscope is capable of bringing into view by virtue of its aperture; on the other hand, it signifies that degree of magnification which may not be exceeded without unduly accentuating those purely optical phenomena of diffraction and interference which are always present in the microscopic image, though they form no part of the structural image of the object. These two limiting values range, in round numbers, from $N = 500 \cdot a$ for the lower limit to $N = 1000 \cdot a$ for the upper limit, a being the numerical aperture of the optical system. For a detailed exposition of this subject the reader is referred to ABBEs Gesammelte Abhandlungen I, 390—406, Jena 1904.

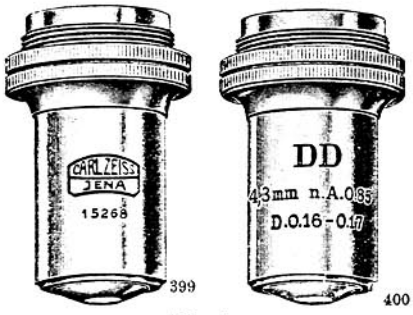

Fig. 4.
Objective Mounts, to show Engraving. (Full Size.)

The mounts of all objectives intended for monocular observation are provided with the so-called **English Standard** (or Society) **Screw,** which has an outside diameter of about 20 mm or $\frac{3}{4}$ inch.

When ordering objectives for use on stands which are not of our make, it is advisable to send us the tube for adaptation.

The mounts of all our objectives have engraved upon them the name of our firm and below this a consecutive number. The engraving on the mount of an apochromatic lens states, in addition, its aperture, its focal length, and the tube length for which it is adjusted. The additional engraving on the mounts of the achromatic lenses shows the single or double letter by which they are designated, their focal length, and in the case of all lenses above *aa* also their numerical aperture. Objectives supplied in fixed mounts have, moreover, the thickness (D) of the cover-glass for which they have been adjusted engraved upon them.

B. *Apochromatic Objectives.

For the purposes of this catalogue we must content ourselves with a brief statement of the essential features of the apochromatic objectives and will refer those who wish to acquaint themselves more fully with the scientific principles and aims which govern the construction of these objectives to the paper of Prof. ABBE entitled „Über Verbesserungen des Mikroskops mit Hilfe neuer Arten optischen Glases“ (Sitzungsber. d. Med.-Naturw. Ges. zu Jena, 20, 107—128, 1886, and Gesammelte Abhandlungen I, 450—472), whilst the general fundamental principles which enter into the construction of these objectives are discussed in CZAPSKI's work entitled „Theorie der optischen Instrumente“, Second Edition, Leipzig 1904.

From a purely optical point of view the apochromatic objectives surpass all optical combinations of lenses which, previous to their introduction, had been devised for use with the microscope in that they embody the simultaneous solution of two problems in the optical correction of lenses which up to then had not been achieved in any department of practical optics. These achievements related to achromatic correction of a higher order known as the elimination of the secodary spectrum of achromatic lenses, by virtue of which rays of three different colours are brought to a focus, coupled with an extended correction of the spherical aberration for two colours instead of the usual correction for one colour only, namely that which appears brightest to the eye.

With all microscope lenses constructed before 1881 the best definition was restricted to one colour, whilst the images produced by the other colours were more or less blurred so as to partly form coloured fringes round the sharpest image and partly cast a more or less pronounced general haze over the entire field. The apochromatic objectives, on the contrary, furnish images which are of a nearly equal degree of sharpness for all rays of the spectrum. The quality of the image formed by an apochromatic objective is accordingly practically independent of the nature of the light which provides the illumination and the latter may accordingly be derived from any part of the spectrnm.

Again, in the older achromatic series perfect colour correction obtains within a restricted zone of the field only, and there is a marked falling off in the quality of the definition at points nearer the centre and nearer the margin of the lens, whilst in the apochromatic type of lenses the colour correction is of a uniform degree of perfection in all zones of the field alike. Hence when an ABBE test plate is applied to ascertain the chromatic quality of an apochromatic lens there is practically the same complete absence of chromatic defects whether the illumination is central, semi-lateral or extremely oblique.

Finally, with the ordinary achromatic lenses, even within the region of their most perfect colour correction, rays of two colours only can be brought to an accurate focus, and hence only the images due to this pair of colours are perfectly coincident, whereas all the images due to rays belonging to other parts

of the spectrum are formed in different focal planes. In the apochromatic system, as we have already stated, three colours are brought accurately to a focus with the result that the entire range of the focal differences throughout the spectrum is reduced in degrees varying from the seventh to the tenth part of what is was originally in the achromatic system, which means that to all intents and purposes it has been eliminated; and it is important to note that this is true for all zones in an equal degree. From this it will be seen that the component images due to the differently coloured rays, besides being individually perfected, have been rendered much more perfectly coincident in one plane and hence blend much more completely to form a homogeneous and sharply defined image.

The practical advantages resulting from the application of these principles are obvious. The qualities resulting from the perfected manner in wich the rays proceeding from an object are made to contribute to the formation of the image have established their acknowledged superiority over all former types in the matter of magnifying and defining power as well as range of application, and that under all conditions of illumination, which may be direct or oblique, monochromatic or white. The natural colours of objects are faithfully rendered by these objectives in their finest gradations, and the definition is nearly as crisp at the edge as it is at the centre of the field.

The large aperture and relatively great working distance of the apochromatic lenses render it impracticable to remove a defect which they share with achromatic lenses, inasmuch as the surface of the image is **curved,** in con sequence of wich **the central and marginal portions of the image are not equally sharp at the same time** and require to be focussed in succession by means of the micrometer screw.

In consequence of their excellent optical correction and great light transmitting power apochromatic objectives may be used in conjunction with eyepieces of very high power without too seriously reducing the definition and brightness of the image. An apochromatic objective of a fairly long focus may thus be made a means of obtaining high magnifications, and any given apochromatic objective furnishes a pretty wide range of magnifications.

The list of Apochromatic Objectives on page 15, in addition to the numerical apertures and focal lengths of the various lenses, contains a column headed „Initial Magnification". This is the magnification which the objective would give at the distance of distinct vision if used without eyepiece, i. e. as a simple magnifier. The initial magnification is found by dividing the focal length of the objective,

---

This achromatisation of a higher order, as here defined, differs fundamentally in theory and in its practical import from a mere improvement in the degree of achromatisation, as ordinarily understood. An improvement of this latter kind, whilst it may serve to diminish the secondary spectrum, fails to blend more than two colours; or it may serve to remove the secondary spectrum within a certain zone, yet fail to effect the achromatisation with respect to three colour rays throughout the entire aperture of the objective. These are nothing more or less than useful improvements in ordinary achromatisation and can be attained by the introduction of suitable glass elements in the formula of the ordinary achromatic objective.

List of Apochromatic Objectives.

Class	Description: Equivalent Focus mm	Description: Numerical Aperture	Initial Magnification	When used in conjunction with a Compensating Eyepiece No. 4 with a tube length of 160 mm: Free Working Distance mm	When used in conjunction with a Compensating Eyepiece No. 4 with a tube length of 160 mm: Diameter of Object as seen in the Microscope mm	Price Marks	Codeword
Dry Series	**16**	**0.30**	15.5	5	2	**80.—**	*Miaban*
	8	**0.65**	31	1.0	1	**100.—**	*Miadela*
	4	**0.95**	63	0.2	0.45	**140.—**	*Miado*
	3	**0.95**	83	0.15	0.35	**160.—**	*Miadores*
Water Immersion	**2.5**	**1.25**	100	0.18	0.25	**250.—**	*Miadura*
Oil Immersion	**3**	**1.30**	83	0.20	0.35	**300.—**	*Miaffe*
	3	**1.40**	83	0.16	0.35	**400.—**	*Miagamos*
	2	**1.30**	125	0.16	0.25	**300.—**	*Miagando*
	2	**1.40**	125	0.12	0.25	**400.—**	*Miagar*
	1.5	**1.30**	167	0.09	0.20	**350.—**	*Miagarais*

The **4 mm** and **3 mm** Dry Lenses and the **2.5 mm** Water Immersion Lens are supplied in mounts fitted with Correction Collars.

Regarding the Immersion Fluid to be used with the Oil Immersion Lenses see note on page 11.

expressed in millimetres, into 250, which is the distance of distinct vision expressed in millimetres. For example, the initial magnification of a 3-mm objective is 250 : 3 = 83.3.

The numerical apertures stated in the table are guaranteed minimum values.

By **Free Working Distance,** as noted in the table, we understand the distance which remains available between the upper surface of the cover-glass of a thickness of 0.17 mm and the lowermost ridge of the lens mount when the objective is sharply focussed with respect to an object situated immediately below the cover-glass. As this quantity is affected by slight variations in the depth of the front lens mount the values indicated in the table are subject to slight discrepancies, in consequence of which these values are approximate only.

The **Area of the Object as seen under the Microscope,** or the size of the stage picture, is governed by the diameter of the diaphragm which bounds the field of view in the eyepiece. The table gives the diameter in millimetres of the circular portion of the object which the eye is able to see trough the specified combination of objective and eyepiece. These particulars are likewise subject to slight variations since the diameter of the diaphragm differs in individual specimens by small amounts.

Stability of the Objectives.

The glasses employed in the construction of our objectives, apochromatic as well as achromatic, have now stood the test of continued use for a great number of years and can on the whole be relied upon to remain unchanged, so that no hesitation need be felt as regards their stability even in tropical climates.

Should nevertheless one of the lenses of an objective supplied by us exhibit spontaneous changes, as has happened in isolated cases, we shall not hesitate to repair the objective so affected by substituting a new lens.

To this undertaking we attach, however, the condition that the faulty objective should not be interfered with before being sent to us — say by unscrewing the mounts in a futile endeavour to remove the trouble by cleaning — as any manipulation of this kind is almost invariably attended with consequences which render it difficult or even impossible to rectify what is initially an easily reparable defect.

It may here be noted that the **2 mm** and **3 mm** Apochromatic Objectives of N. A. **1.40** have a hyper-hemispherical front lens which is held in position by a cell which offers little more than peripheral contact, in consequence of which these objectives require very careful handling. The mounting is sufficiently delicate that a slight impact with the cover-glass may loosen the front lens in its seating.

C. Compensating Eyepieces.

In all microscopes objectives of large apertures the presence of a non-achromatic front lens is responsible for certain inherent colour defects in the extra-axial portion of the visual field known as the chromatic difference of magnification, as explained in DIPPEL's „Das Mikroskop", Second Edition, 1, 225—227, Brunswick, 1882; CZAPSKI, „Theorie der optischen Instrumente", Second Edition, 182, 368, Leipzig 1904. The differently coloured constituent images which blend into the resultant image are of different magnitudes, the blue being larger than the red. An image projected by an objective of this kind without eyepiece or when viewed through an eyepiece of the usual type will exhibit colour fringes which increase in intensity towards the margin.

This residual defect of lenses of large aperture is shared by the apochromatic lenses, and, in order that it may be possible to correct it more or less completely by a specially devised series of eyepieces it has been introduced intentionally in a similar degree in the lower powers as well. To compensate this defect, eyepieces have been computed having a defect equal in magnitude and opposite in kind to that inherent in, or intentionally imparted to, the objectives, so that the red image formed by them is larger than the blue image. These eyepieces serve accordingly to compensate the imperfection due to the chromatic difference of magnification referred to and when viewed through them the images are uniformly colourless up to the edge of the diaphragm in the eyepiece by which the field of view is bounded. Being itself undercorrected the eyepiece shows the edge of the diaphragm as such bordered by a reddish or yellowish fringe.

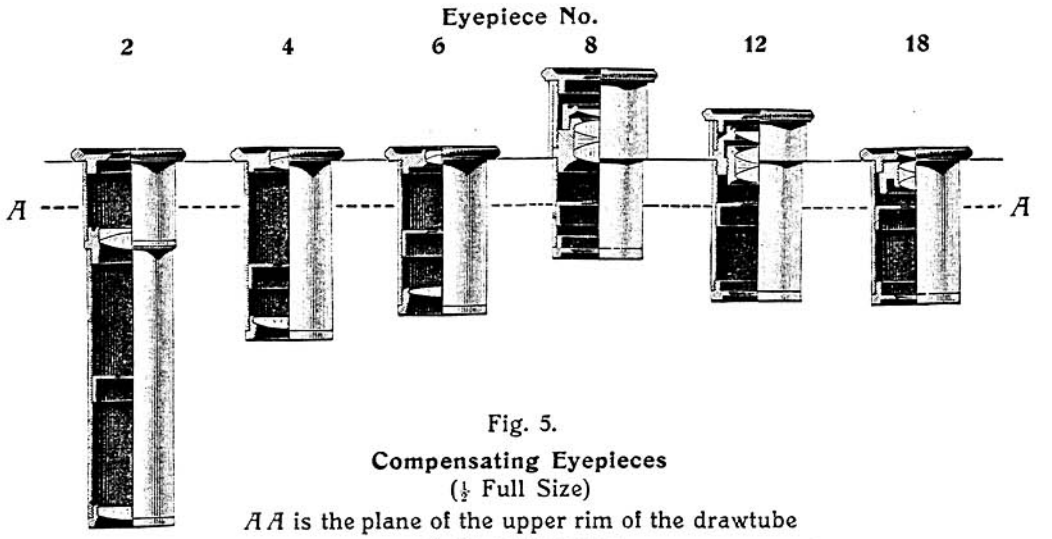

Fig. 5.

Compensating Eyepieces

(½ Full Size)

A A is the plane of the upper rim of the drawtube of the microscope.

The **Sequence of the Eyepiece Powers** is carried out on a plan originated by Prof. ABBE, who arranged matters so that the number which denotes how many times an eyepiece used on a tube of the standard length increases the initial magnification of an objective should also furnish a correct measure of the eyepiece magnification and at the same time supply a rational means of numbering the sequence of the eyepieces. In accordance with this principle our Compensating Eyepieces are numbered in terms of eyepiece magnifications by the following sequence: Nos. 2, 4, 6, 8, 12, 18.

It should, however, be noted that the Eyepiece Magnifications here indicated hold good for the objectives of higher powers only; for, as stated by ABBE, the eyepiece magnification is numerically equal to the quotient obtained by dividing the focal length f_2 of the eyepiece into the optical tube length $\triangle$, which is the distance between the upper principal focus of the objective and the lower principal focus of the eyepiece. This distance is generally greater in high power lenses than it is in lower powers, when the length of the mounts is so adapted that the lenses may be changed without disturbing to any great extent the focussing adjustment. This naturally causes the magnifying power of any given eyepiece to vary within certain limits when used in conjunction with different objectives.

The No. **2** Eyepiece, described as **Searcher Eyepiece,** extends the range of magnifications downwards to its lowest useful limits and provides a convenient means of surveying an object or searching for certain elements without the necessity of exchanging a high power lens, especially an oil immersion lens, for one of lower power.

The other eyepieces, which serve as **Working Eyepieces,** can be used with great ease and comfort from the lowest to the highest power. The eye point or exit pupil lies in all cases sufficiently high above the top lens and the latter has a sufficiently large diameter to do away with the inconveniences which formerly attended the use of eyepieces of short focus.

The annexed table gives the particulars of our standard Compensating Eyepieces.

When ordering Compensating Eyepieces intended for use with stands other than those of our make it will be necessary to send a sealingwax impression of the top of the drawtube, or better still to send the tube itself to ensure the requisite fit.

When the required diameter differs very considerably from the standard size the price is subject to special quotation.

A Table of the Magnifications obtainable with the Apochromatic Objectives used in conjunction with the Compensating Eyepieces will be found on page 24, whilst those furnished by high power Achromatic Objectives and Compensating Eyepieces are given on page 26.

List of Compensating Eyepieces.

	Searcher Eyepiece	Working Eyepieces				
Denominational No.	**2**	**4**	**6**	**8**	**12**	**18**
Equivalent Focal Length in mm	70	39	33	21	15	10
Price in Marks	**20.—**	**20.—**	**20.—**	**30.—**	**30.—**	**25.—**
Codewords	*Miagaran*	*Miagasen*	*Micropylos*	*Miagogue*	*Miagola*	*Miagolai*

For **keeping objectives and eyepieces** independently of the microscope case we supply Mahogany Cases fitted with lock and key, as shown in Fig. 6, at prices ranging from M. **18.—** to M. **40.—**.

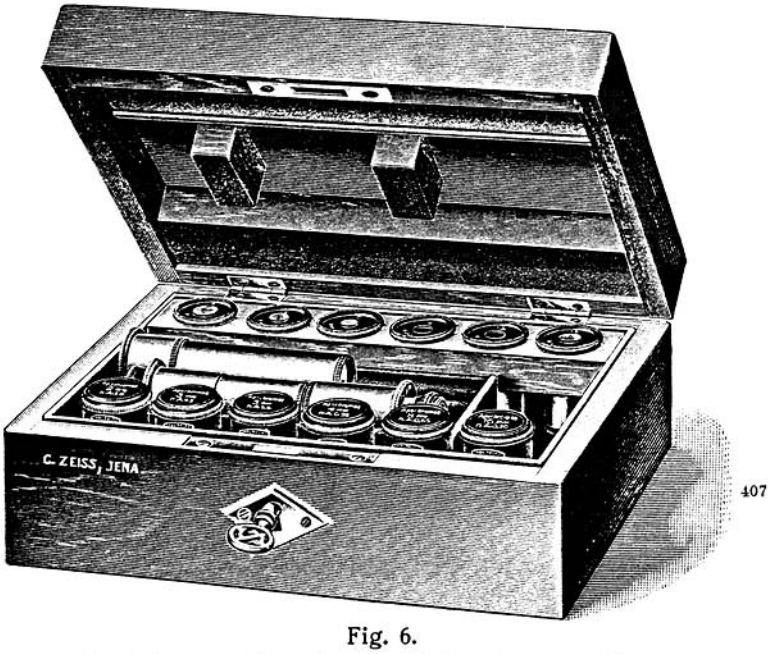

Fig. 6.

No. 12.1400 Mahogany Case for Six Objectives and Nine Eyepieces.

No.		Marks	Codeword
12.1400	**Mahogany Case for six objectives and nine eyepieces . . . . . .**	**18.—**	*Miargyrite*

D. Achromatic Objectives.

The glasses produced by the Jena Glass Works have already many years ago enabled us to reconstruct and greatly improve the majority of our original types of achromatic objectives, and already then fluorite lenses were introduced into the formula of the higher powers of the improved achromatic objectives. This has furnished a means of achieving in these objectives, a much better correction of the spherical and chromatic aberrations, with the result that their defining power and the crispness of the image were greatly improved. In the mean time the lower powers have also undergone modifications, especially in the matter of extra-axial definition.

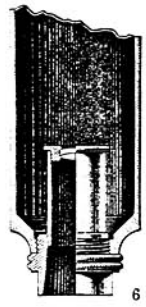

Fig. 7.
Objective a_0.
showing the mode of attachment to the tube.
($\frac{1}{2}$ Full Size.)

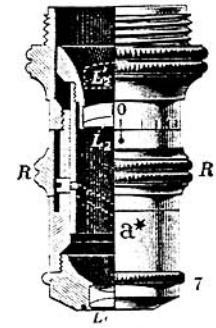

Fig. 8.
Objective a*.
By the rotation of the ring *RR* the upper pair of lenses (L_2) may be elevated into the position (L_2') indicated by dotted lines.
(Full Size.)

To the previously existing objectives we have added a new $\frac{1}{12}$" Oil Immersion Lens, in which the chromatic correction is improved with the aid of fluorite lenses in a manner that this objective occupies an intermediate position between the achromatic and apochromatic objectives. The numerical aperture of this new immersion lens has a guaranteed minimum value of 1.30.

In addition to this lens we continue to supply the old $\frac{1}{12}$" Oil Immersion Lens with its original aperture slightly reduced, viz. from 1.30 to 1.25. This lens, it should be noted, is of precisely the same degree of optical correction as the immersion lens of larger aperture which it has replaced. It is accordingly an excellent and comparatively inexpensive immersion lens for daily use.

In the case of the dry lenses of numerical apertures exceeding 0.65, that is to say from **DD** upwards, the improved optical correction referred to, whilst greatly enhancing their defining qualities, has had the imevitable collateral effect of rendering these lenses extremely sensitive to discrepancies in the thickness of the cover-glasses and to changes in the tube length. When these objectives are used it is therefore either necessary to adhere rigorously to the

prescribed cover-glass thickness and the standard tube length or, to avoid the sacrifice of much valuable time on the selection of appropriate cover-glasses, they should be provided with correction collars (see pp. 10 and 22).

Our lowest power objectives a_0, a_1, a_2 and a_3 are simple achromatic lenses. The mount of Objective a_0 is so arranged that, despite its long focus, it does not require the microscope tube to be racked far above its usual height. To this end the screw threads are on a cylindrical extension of the mount, which causes the lens to occupy a position some distance up the tube when the objective is attached, as shown in Fig. 7. This objective cannot be used accordingly in conjunction with a revolving nosepiece or other objective changer, vertical illuminator or similar intermediate fitting. Objective a_1 is optically identical with a_0, except that it is so mounted that the lens remains outside the tube. With the lens so mounted the optical tube length is rather longer than with the Objective a_0 and hence the magnifications of the objective and the eyepieces combined exceed those resulting in the case of a_0.

Objective a* (Fig. 8) is a combination system consisting of two achromatic lenses, the distance between which can be varied by means of a ring *RR* after the manner of a correction collar, whereby the magnification furnished by the lens and eyepiece combined can be varied within a range of one hundred per cent, whilst the index travels from 0 to 10 on the scale.

Our **D* Water Immersion Lens** was introduced in 1890. It was designed to facilitate the study under fairly high magnifications (200 to 500 diameters) of living objects floating in water. Its exceptionally long working distance enables an observer to follow these moving organisms within a pretty wide range in an up and down direction.

The objective may be used with and without cover-glass and defines equally well with fresh water and sea water.

Owing to its long working distance the **D*** Objective is particularly well adapted for use in conjunction with apparatus devised for the examination of fluids containing ultra-microscopic particles (See our booklet *Mikro 229,* Third Edition, page 8).

The **Water Immersion Objective PI,** originally introduced by us in 1898 under the name **Plankton Searcher,** resembles the **D*** lens in its character and serves similar purposes. Having a long focus it is adapted for work under low magnifications only and with a numerical aperture of 0.11 it combines a free working distance of no less than 36 mm and a considerable depth of focus. The glasses used in the construction of this objective, whilst perfectly proof against the action of water, endow the lens with well-nigh apochromatic qualities.

As a convenience for use with this objective we supply with it a special Glass Vessel No. **12.8720,** being a glass disc with a tall glass cylinder cemented thereto, which is likewise adapted for use with the paired objectives (PI) listed on page 23.

No.		Marks	Codeword
12.8720	**Glass Vessel** for Objectives **PI** and (PI) . . .	**3.50**	*Miagolammo*

List of Achromatic Objectives.

Class	Designation	Equivalent Focal Length mm	Numerical Aperture	When used in conjunction with a Huyghenian Eyepiece No. 2 with a tube length of 160 mm: Free Working Distance mm	When used in conjunction with a Huyghenian Eyepiece No. 2 with a tube length of 160 mm: Diameter of Object as seen in the microscope mm	Price Marks	Codeword
Dry Series	a_0	45	—	32	14	12.—	*Miagolando*
	a_1	45	—	61	10	12.—	*Miagolano*
	a_2	37	—	43	7.5	12.—	*Miagolante*
	a_3	28	—	27	5.2	12.—	*Miagolare*
	a*	43–29	—	10—42	9—20	40.—	*Miagolasse*
	aa	26	0.17	14	4	27.—	*Miagolassi*
	A	15	0.20	9	2	20.—	*Miagolasti*
	AA	17	0.30	7.5	2.5	30.—	*Miagolata*
	B	12	0.35	3	1.5	30.—	*Miagolato*
	C	7	0.40	1.8	0.9	30.—	*Miagolava*
	D	4.2	0.65	0.6	0.5	35.—	*Miagolerai*
	DD†)	4.3	0.85	0.4	0.5	50.—	*Miagolerei*
	DD†) with Correction Collar					70.—	*Miagolero*
	E†)	2.8	0.90	0.25	0.35	60.—	*Miagoli*
	E†) with Correction Collar					80.—	*Miagoliamo*
	F†)	1.8	0.90	0.17	0.23	75.—	*Miagoliate*
	F†) with Correction Collar					95.—	*Miagolino*
Water Immersion Lenses	Pl	25	0.11	36	4	20.—	*Miagolio*
	D*	4.4	0.75	1.5	0.55	75.—	*Miagolo*
	J	1.8	1.18	0.2	0.23	110.—	*Miais*
	J with Correction Collar					130.—	*Miaja*
Oil Immersion Lenses	$\frac{1}{12}''$	1.8	1.25	0.15	0.25	100.—	*Mialet*
	$\frac{1}{12}''$ Fl†)	1.8	1.30	0.13	0.22	140.—	*Mialgia*

For the meaning of the terms Free Working Distance and Diameter of Object as seen under the microscope see pp. 14 and 16.

Regarding the Immersion Fluid to be used with the Oil Immersion Lenses see note on page 11.

†) These objectives contain fluorite lenses.

*Paired Objectives for Binocular Microscopes.

For use with binocular microscopes we supply adjusted Pairs of Objectives **Pl (Water Immersion), a_3, a_2, a_0** and one of still lower power with a focus of **55 mm.** These objectives are specially mounted on metal slides and are identified by the following notation: (55), (a_0), (a_2), (a_3), (Pl).

Notation	(55)	(a_0)	(a_2)	(a_3)	(Pl)
Price of Pair Marks	45.—	45.—	45.—	45.—	55.—
Codeword	*Mialham*	*Mialhar*	*Mialharia*	*Mialmas*	*Miami*

The (a_0) Pair of Objectives is supplied with Slip-on Stops, which should be used when the image is required to be uniformly sharp up to the margin.

A note respecting the nature and purpose of Objectives (Pl) will be found on page 21.

A Table of Magnifications, Free Working Distances and Areas of Objects included in the field of Paired Objectives used in conjunction with the Paired Eyepieces of a Binocular Microscope is given on page 26.

E. Huyghenian and Orthoscopic Eyepieces.

For use with achromatic objectives we provide a series of **Huyghenian Eyepieces** of different powers. The focal lengths of these eyepieces are so arranged that the eyepiece magnifications which result when they are used with high power lenses on a tube of a true length of 160 mm follow the sequence 3, 4, 5.5, 7 and 9.

We would here point out expressly that the Huyghenian Eyepieces are intended for use with achromatic objectives only.

Compensating Eyepieces may be used in conjunction with those achromatic objectives only whose numerical aperture exceeds 0.65, i. e. from Objective **DD** uppwards.

To obtain higper eyepiece magnifications than are furnished by the ordinary Huyghenian Eyepieces we make two **Orthoscopic Eyepieces, No. 6 and No. 7 respectively, with a considerably Enlarged Field of View,** whose eye point, as in the Compensating Eyepieces, lies at a convenient height above the eye lens.

Eyepieces designed for special purposes are described on pp. 85—87 and 101—103.

List of Huyghenian and Orthoscopic Eyepieces

a) For Monocular Microscopes:

Eyepiece Number	1	2	3	4	5	6	7
Equivalent Focus in mm	50	40	30	25	20	15	9
Eyepiece Magnification about	3	4	5.5	7	9	12	20
Price Marks	6.—	6.—	6.—	6.—	6.—	25.—	25.—
Codeword	*Miamia*	*Miamos*	*Mianabug*	*Mianada*	*Miando*	*Mianmai*	*Miaou*

b) For Binocular Microscopes:

Eyepiece Number	Paired Eyepieces						
	1	2	3	4	5	6	7
Price Marks	12.—	12.—	12.—	12.—	12.—	50.—	50.—
Codeword	*Miapia*	*Miapiulo*	*Miaras*	*Miaremos*	*Miares*	*Miaretis*	*Miargyrit*

F. Tables of Magnifications.

Table of Magnifications obtained with Apochromatic Objectives and Compensating Eyepieces

Calculated for a Tube-length of 160 mm and an Image Distance of 250 mm.

Focal Length of the Objective	Searcher Eyepiece	Working Eyepieces				
mm	2	4	6	8	12	18
16	31	62	94	125	187	281
8	62	125	187	250	375	562
4	125	250	375	500	750	1125
3	167	333	500	667	1000	1500
2.5	200	400	600	800	1200	1800
2	250	500	750	1000	1500	2250
1.5	333	667	1000	1334	2000	3000

When the objectives are attached to the microscope by means of a Revolving Nosepiece or Sliding Objective Changer 15 mm should be allowed for the depth of the Nosepiece and 22 mm for that of the Sliding Objective Changer when adjusting the tube-length (See page 49).

Table of Magnifications obtained with Achromatic Objectives and Huyghenian Eyepieces

Calculated for a Tube-length of 160 mm and an Image Distance of 250 mm.

Objective	Huyghenian Eyepieces					Orthoscopic Eyepieces	
	1	2	3	4	5	6	7
a_0	4.5	7	11	14	18	23	38
a_1	7	10	16	20	28	35	57
a_2	11	15	23	28	37	47	75
a_3	20	26	38	47	55	68	110
a*	3—8	5—12	8—18	10—22	15—31	20—40	32—63
aa	24	31	46	57	75	95	150
A	42	54	79	97	130	165	260
AA	39	50	73	90	120	150	240
B	58	74	110	130	180	225	360
C	100	125	180	225	300	370	590
D	175	220	330	385	550	680	1100
DD	170	210	315	365	530	650	1050
E	275	345	505	620	830	1030	1650
F	410	510	735	900	1260	1540	2500
Pl	26	33	48	60	80	100	160
D*	170	210	315	365	530	650	1050
J	410	515	750	920	1280	1570	2540
$\frac{1''}{12}$	410	515	750	920	1280	1570	2540

When the objectives are attached to the microscope by means of a Revolving Nosepiece or Sliding Objective Changer 15 mm should be allowed for the depth of the Nosepiece and 22 mm for that of the Sliding Objective Changer when adjusting the tube-length (see page 49).

Table of Magnifications obtained with High Power Achromatic Objectives and Compensating Eyepieces.

Objectives	Compensating Eyepieces					
	2	4	6	8	12	18
DD	110	220	330	440	660	990
E	180	360	540	720	1080	1620
F	260	520	780	1040	1560	2340
J	260	520	780	1040	1560	2340
1″/12	260	520	780	1040	1560	2340

Table of Magnifications, Free Working Distances and Areas of Object included in the Field of View of Objectives Paired for Binocular Microscopes.

	Paired Objectives									
	(55)		(a0)		(a2)		(a3)		(Pl)	
Free Working Distance mm	70		54 without stops	40 with stops	40		30		35	
Paired Eyepieces	Magnification	Diameter of Object included in the Field of View mm	Magnification	Diameter of Object included in the Field of View mm	Magnification	Diameter of Object included in the Field of View mm	Magnification	Diameter of Object included in theField of View mm	Magnification	Diameter of Object included in theField of View mm
1	8	13	14	7.5	20	5	31	3.3	37	3
2	9	13	15	7.5	23	5	35	3.3	42	3
3	13	10.5	22	6.5	32	4.2	50	2.7	60	2.5
4	16	8.5	27	4.8	40	3.3	61	2.2	73	2
5	23	6.2	39	3.6	57	2.5	88	1.6	105	1.4
6	26	7.1	46	4.1	67	2.7	103	1.8	121	1.6
7	44	4.1	77	2.4	112	1.6	172	1.1	200	1

II. The Stands.

A. The Illumination of the Object.

I. Illumination by Transmitted Light.

a) Illuminating Apparatus of Stands I to IV.

Most microscopic objects require to be viewed by transmitted light and, to accomplish this successfully under all conditions, means must be provided for varying both the angular aperture of the incident pencils of light and their direction in every conceivable manner. These requirements are completely met by the **ABBE Illuminating Apparatus,** which originated in our workshops in

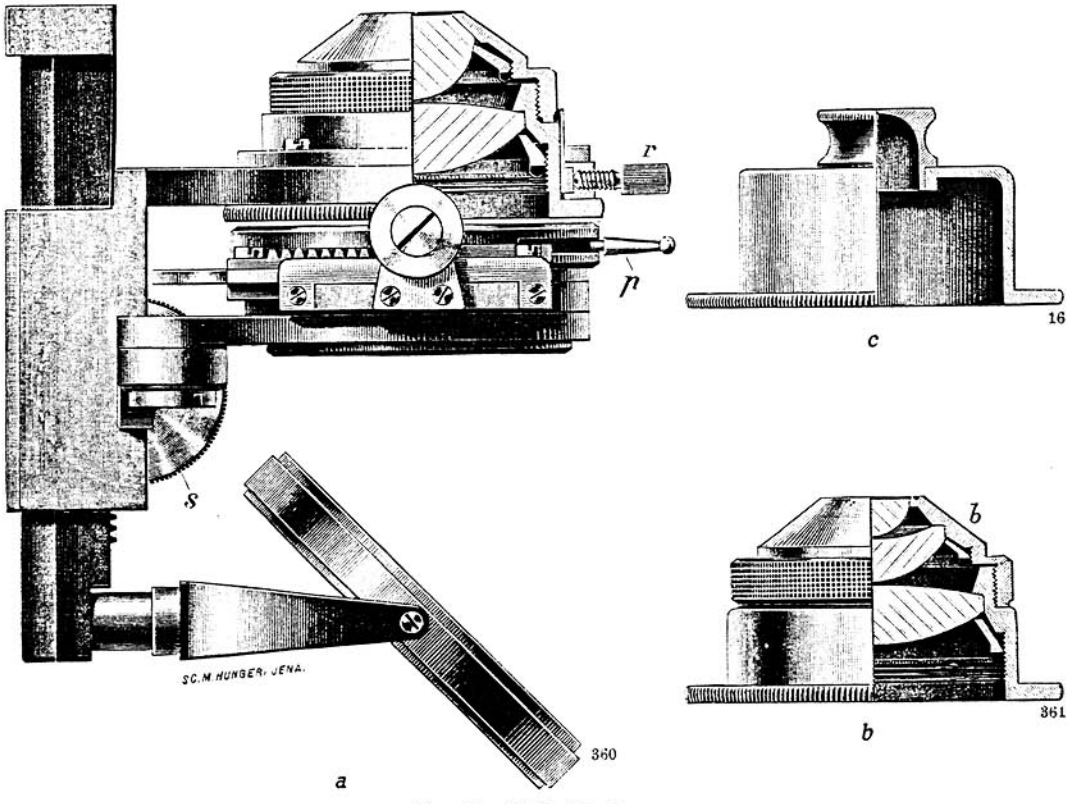

Fig. 9. (Full Size)

a: **ABBE Illuminating Apparatus with Two-lens Condenser No. 11.4120;** *r:* Screw for clamping the condenser in its sliding sleeve; *p:* Button to operate the Iris Diaphragm No. **12.0130;** *b:* **Three-lens Condenser No. 11.4130;** *c:* **Cylinder Diaphragm No. 11.4100.**

1872 (E. ABBE, M. Schultze's Archiv für Mikr. Anat., 9, 469—480, 1873, and Gesammelte Abhandl. 1, 101—112, Jena, 1904). It has now come into such general use and is so universally regarded as an indispensable requirement in all finer investigations that no large microscope designed for scientific observations is now-a-days without it in one form or another.

Detailed information on the construction and application of this apparatus is contained in the Directions (Leaflet Mikro 15) which are supplied with all stands fitted with an ABBE Illuminating Apparatus.

The various optical combinations, or **Condensers,** which have been devised for use with the ABBE Illuminating Apparatus are all mounted in cylindrical fittings which slip into a **Sliding Sleeve,** within which they may, if necessary, be secured by means of a clamping screw **r** (Fig. 9). Since 1886 the apparatus includes an **Iris-Diaphragm** for gradually contracting or expanding the aperture of the condenser. Each condenser is supplied with a blue ground glass disc fitting a recess in the diaphragm carrier.

We do not supply the ABBE Illuminating Apparatus except an as integral part of Stand I, III or IV. When these stands are initially purchased without the main body of the illuminating apparatus the stand requires to be sent to our works for its subsequent adaptation. In the case of Stands III and IV, if initially fitted with an incomplete illuminating apparatus the latter can be supplemented subsequently without sending the stand to our works.

The following are the fittings which may be added subsequently to a Stand **III** or **IV** purchased initially with an incomplete illuminating apparatus:

No. **12.0120. Diaphragm Carrier** (Fig. 25, B; page 55).

No. **12.0130. Iris Diaphragm** to fit the Diaphragm Carrier.

The various **Stops, Condensers,** etc. provided for use with the ABBE Illuminating Apparatus are supplied separately, as follows:

No. **11.4100. Cylinder Diaphragm** (Fig. 9 c), which is a cylindrical sliding fitting with three interchangeable stops 1 mm, 3 mm and 6 mm in diameter.

No. **11.4105. *Iris Cylinder Diaphragm.** This serves for **gradually** changing the size of the illuminating pencil when the microscope is used without a condenser. The laminae of which the iris-diaphragm is made up are dished, so that when the iris is contracted to a pin hole it almost touches the underside of the object slide.

The Cylinder Diaphragm No. **11.4100** as well as the Iris Cylinder Diaphragm No. **11.4105** fit the sliding sleeve of Stand **V.**

No.		Marks	Codeword
12.0120	**Diaphragm Carrier**	**20.—**	*Miasmal*
12.0130	**Iris Diaphragm** to fit diaphragm carrier . . .	**10.—**	*Miasmas*
11.4100	**Cylinder Diaphragm with three Interchangeable Stops**	**4.—**	*Miaria*
11.4105	**Iris Cylinder Diaphragm**	**14.—**	*Miariais*

No. **11.4120. Two-lens Condenser** in slide fitting (Fig. 9a), N. A. 1.2, equivalent focus about 10 mm.

No. **11.4130. Three-lens Condenser** in slide fitting (Fig. 9b), N. A. 1.4, equivalent focus about 8 mm.

No. **11.4140. *Aplanatic Condenser** in slide fitting, N. A. 1.4, equivalent focus about 10 mm.

These Condensers are so mounted that the front lens may be screwed off the two-lens condenser and the two front lenses in the case of the three-lens condenser. The remaining lens serves then as a long focus condenser of small aperture for observations with objectives of low power.

When the condensers are required to work up to their fullest capacity in conjunction with objectives of large aperture the space between the condenser and object slide should be filled with immersion fluid.

***Swing-out Condensers with Iris Cylinder Diaphragm** (Fig. 10); No. **11.4125**: Two-lens Condenser; No. **11.4135**: Three-lens Condenser.

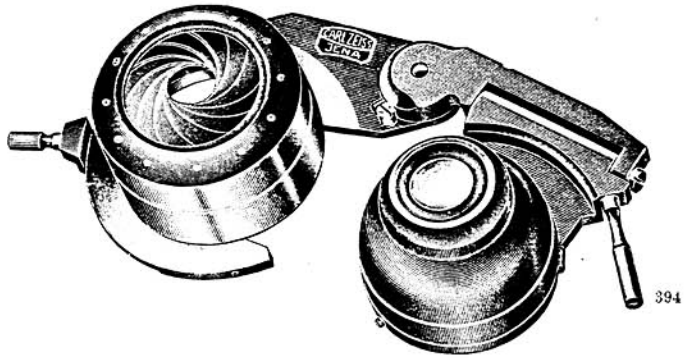

Fig. 10.
Swing-out Condenser with Iris Diaphragm
(as it appears when withdrawn from its sleeve).
($\frac{3}{4}$ Full Size.)

This pattern was introduced by us in 1894 (Zeitschr. f. wiss. Mikr. **11**, 433—440, 1894). The advantage of this arrangement is that the condenser and iris cylinder diaphragm are combined in one apparatus. The two parts are so connected by an arrangement of hinges that the condenser can be withdrawn from the mount of the iris cylinder diaphragm and swung aside. This affords a convenient means of rapidly passing from illumination with the mirror and condenser to that with the mirror only.

No.		Marks	Codeword
	Condensers in slide fitting		
11.4120	Two-lens Condenser, N. A. 1.2	**20.—**	*Miaron*
11.4130	Three-lens Condenser, N. A. 1.4	**25.—**	*Miascite*
11.4140	Aplanatic Condenser, N. A. 1.4	**60.—**	*Micropus*
	Swing-out Condensers with Iris Cylinder Diaphragm		
11.4125	Two-lens Swing-out Condenser N. A. 1.2 . . .	**45.—**	*Miase*
11.4135	Three-lens Swing-out Condenser, N. A. 1.4 . .	**50.—**	*Miaseis*

Detailed information respecting the construction of these condensers will be found in the Directions for Using the ABBE Illuminating Apparatus, *Mikro 15*.

When substituting another condenser for the Swing-out Condenser, for example when proceeding to establish dark ground illumination by means of the Paraboloid Condenser, the entire body of the condenser, as shown in Fig. 10, should be withdrawn from the sliding sleeve in the substage.

No. **11.4220.** ***Centring Achromatic Condenser** (Fig. 11), N. A. 1.0, equivalent focus about 14 mm.

This condenser has its iris-diaphragm between the lenses and hence the iris-diaphragm of the ABBE illuminating apparatus should remain opened to its full extent.

When the achromatic condenser is used with the iris-diaphragm opened widely it is advisable to place a drop of immersion fluid between the condenser and the object slide.

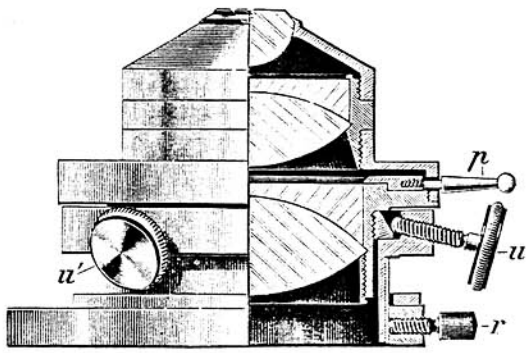

Fig. 11.
Centring Achromatic Condenser No. 11.4220.
(Full Size.)

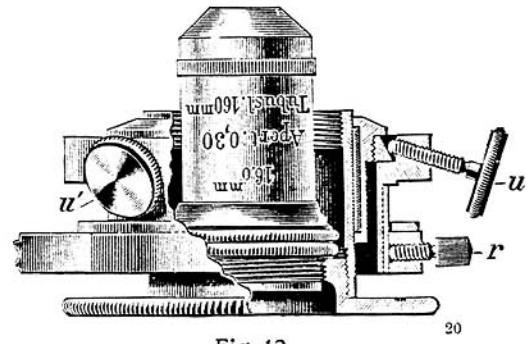

Fig. 12.
Objective in Centring Adapter No. 11.4241 for Microscope Objectives.
(Full Size.)

No. **11.4241.** ***Centring Adapter for Microscope Objectives** when used as condensers (Fig 12).

In many instances it is an advantage to use microscope objectives as illuminators instead of the condensers specified above. We supply for this purpose a sliding sleeve with centring collar into which these objectives may be screwed and which fits into the sleeve of the illuminating apparatus.

No. **11.4250. Quartz Condensor, N. A. 1.3.** This condenser serves for the illumination of ultra-microscopic particles with ultra-violet light.

One of the purposes for which the Quartz Condenser is adapted is the study of luminescence in microscopic objects (Luminescence Microscope, parti-

No.		Marks	Codeword
11.4220	**Centring Achromatic Condenser,** N. A. 1.0, in case	**75.—**	*Miasen*
11.4241	**Centring Adapter for Microscope Objectives** when these are to be used as condensers . .	**12.—**	*Miaskite*
11.4250	**Quartz Condenser,** N. A. 1.3, with interchangeable upper part making the aperture 0.8	**70.—**	*Miasm*

culars of which will be furnished an enquiry). It is likewise necessary for taking photo-micrographs with ultra-violet light *("Mikro 170")*.

The Quartz Condenser is supplied with two interchangeable fronts. One of these consists of two lenses and imparts to the combination a numerical aperture of 1.3, the other consists of a single lens and makes the aperture 0.8, whilst with the back lens only the aperture becomes 0.3. The condenser mount is so arranged that it can be slipped into the Centring Adapter No. **11.4241** (Fig. 12). The mount of the condenser has an iris-diaphragm attached cencentrically to it.

Objects intended for use with this condenser should be mounted on slides of crystallised quartz (No. **12.8900,** page 105), the thickness of which amounts to about 0.5 mm. Under certain conditions object slides of U.-V. glass may be used for this purpose.

When any of these above condenser fittings are required for a microscope obtained on a previous occasion it will be necessary to send as a gauge a condenser or cylinder diaphragm belonging to the existing microscope.

b) Illuminating Apparatus for Stands V.

Stands of the No. **V** pattern are not equipped with the full sized ABBE illuminating apparatus and in its place are fitted with a simplified illuminator. For use with these stands we supply distinct condenser and diaphragm fittings which slip into a sliding sleeve attached to the underside of the stage. The standard sleeve has a diameter of 36.8 mm and will likewise receive the Cylinder Diaphragm No. **11.4100** and the Iris Cylinder Diaphragm No. **11.4105** (page 28).

No. 11.4310. *Simplified Illuminating Apparatus, consisting of a condenser of N. A. 1.0 in cylindrical sliding mount and an iris-diaphragm permanently attached concentrically with the condenser.

The condenser is the same as that which forms part of No. **11.4410.**

The Iris Diaphragm of the Illuminating Apparatus No. **11.4310** provides a means for the attachment of the No. II Polariser No. **12.7802** (page 94).

No. **11.4320. *Simplified Illuminating Apparatus** consisting of a condenser of N. A. 1.2 in a cylindrical sliding mount and an iris-diaphragm permanently attached concentrically with the condenser.

The subjoined fitting may be obtained separately:

No. **12.0310.** Condenser Sliding Sleeve of 36.8 mm inside diameter. This fitting can be fitted subsequently to Stands of the **VA** pattern (page 61) when the latter are to be used with the Condensers No. **11.4310** or **11.4320** or the Paraboloid Condenser No. **11.4510.**

No.		Marks	Codeword
11.4310	**Simplified Illuminating Apparatus** with Condenser of N. A. 1.0, for Stand **V**	**24.—**	*Miasmata*
11.4320	**Simplified Illuminating Apparatus** with Condenser of N. A. 1.2, for Stand **V**	**30.—**	*Miasmatico*
12.0310	**Condenser Sliding Sleeve** of 36.8 mm diameter for Stand **VA**	**1.50**	*Miasmatisch*

c) Illuminating Apparatus for Stand VI.

Stand **VI** is likewise of a design which does not admit of the adaptation of the full sized ABBE illuminating apparatus. Like Stand **V**, it is fitted with a sliding sleeve at the underside of the stage. The diameter of the latter in the case of Stand **VI** is only 20 mm. We supply the following fittings for the sliding sleeve:

No. **11.4400. Cylinder Diaphragm** with three interchangeable stops.

No. **11.4405. *Iris Cylinder Diaphragm.**

No. **11.4410. Simplified Illuminating Apparatus** with a two-lens condenser of N. A. 1.0 and focus of about 7 mm, and having an iris diaphragm permanently attached concentrically with it. The condenser is optically identical with No. **11.4310.**

When ordering No. 11.4405 or No. 11.4410 independently of the stand a cylinder diaphragm forming part of its equipment should be sent by way of a gauge.

No polarising apparatus has been designed for Stand **VI**, since, being without a revolving stage, it is not adapted for work with polarised light.

II. Dark Ground Illumination.

The methods of ultra-microscopic observation described by SIEDENTOPF and ZSIGMONDY in 1903 had the effect of reviving the interest in the method of dark ground illumination, which had almost come to be forgotten. By the application of modern optical resources the old methods were improved upon in the course of the succeeding few years and optical combinations were devised which could be used successfully for the purposes of scientific investigations. Results of modern research show most unmistakably that observation by the method of dark ground illumination is as valuable and trustworthy as the observation by transmitted light. Indeed the improved appliances which have been devised for dark ground illumination bring into view objects which belong already to the domain of ultra-microscopically small objects. It is, however, neither necessary nor advantageous to employ for the observation of microscopic objects in a dark field such highly corrected condensers as have been devised for the observation of finest colloid particles, as these appliances from their very nature demand the most rigorous attention to the directions which govern their successful use. Where the observation is of a less exacting nature this cannot fail to prove irksome, yet any attempt to relax these requirements is bound to vitiate the results of the observation.

No.		Marks	Codewords
11.4400	**Cylinder Diaphragm** with three interchangeable stops for Stand **VI**	**2.—**	*Miasmatist*
11.4405	**Iris Cylinder Diaphragm** for Stand **VI** . . .	**8.—**	*Miasmatous*
11.4410	**Simplified Illuminating Apparatus** for Stand **VI**	**22.—**	*Miasme*

Dark Ground Illumination furnishes a valuable means for bringing into view Objects which are either smaller than about 1 μ in all three dimensions, such as the smallest cocci and the particles of colloid solutions and serum, or which have at least two dimensions which are less than 1 μ. Examples of such objects are furnished by fibres, fine crystalline needles, fissures, edges, rods, bacteria and similar forms. Under dark ground illumination these objects can be seen without difficulty, whereas in transmitted light they are either very difficult to see or can only be rendered clearly distinguishable by certain artificial aids, such as the use of stains and mordants in the case of bacteria. Another class of objects which is adapted for observation by the method of dark ground illumination consists in laminar bodies having a surface presenting regular markings, such as diatoms, and also unhomogenous objects whose thickness does not exceed the range of penetration of the objective and whose structure is discernible by reason of dissimilarities in refraction rather than by differences in colouring, say.

Observation by dark ground illumination has the further advantage that it fatigues the eye in a far less degree than observation by transmitted light in a field which is often brightly illuminated. A field produced by dark ground illumination is moreover free from entoptical phenomena, and hence one is at liberty to use high eyepiece magnifications.

It goes without saying that observations by the method of dark ground illumination cannot under all circumstances take the place of that by transmitted light; on the other hand, it supplies an admirable check upon observations made with transmitted light.

Unless the magnification is very low all dark ground illumination should be produced by meams of artificial light. The Micro Nernst Lamp No. **13.9120** (p. 108) and the Micro Arc Lamp No. **13.9160** (p. 109) are particularly well adapted for this purpose. The Directions referred to in the succeeding pages supply the requisite information respecting other sources of light which may be required.

For dark ground illumination we supply the appliances described below. Hints respecting the choice of a suitable equipment for ultra-microscopic observation are contained in our publication bearing the reference Mikro 308.

No. **11.4500. Central Stop** for the Immersion Condenser of N. A. **1.4.**

This stop is placed under the widely opened iris-diaphragm of the ABBE illuminating apparatus. The object slide should be placed upon the microscope stage and joined to the condenser by a drop of water or cedarwood oil in such a manner as to exclude the presence of air bubbles. This is sufficient to establish dark ground illumination by total reflection with all lenses of the dry series (Fig. 13). The condenser of the N. A. 1.4 (No. **11.4130** or No. **11.4135,** page 29) is always employed for this purpose as an immersion condenser.

No.		Marks	Codeword
11.4500	**Central Stop for dark ground illumination** for use with the Immersion Condenser of N. A. 1.4	**1.50**	*Micantia*

The multiple reflections which occur within the condenser detract a little from the quality of the dark field. Also when the dark ground stop in the diaphragm carrier is not absolutely central with respect to the axis of the condenser the chromatic defects of the latter reveal themselves by a coloured illumination. The Central Stop furnishes accordingly a satisfactory dark ground illumination with objectives of low and itnermediate powers only. When objectives of a higher power are used, say from the DD and 4 mm apochromatic objective upwards, the objective should at all events be fitted with Hanging Stops (Paraboloid Stops), as described below in connection with the Paraboloid Condenser. Detailed information is also given in the Directions bearing the reference Mikro 231 and in a paper published in the Zeitschr. f. wiss. Mikr. **24,** 13—20, 1907.

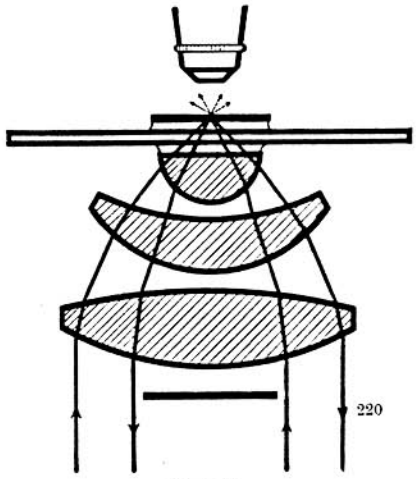

Fig. 13.
Trace of Rays trough the Condenser of N. A. 1.4 with Central Stop.

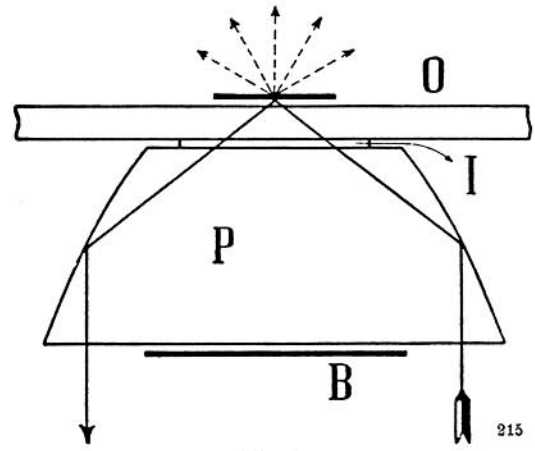

Fig. 14.
Trace of Rays trough the Paraboloid Condenser.

No. **11.4505.** ***Slit Stop** for demonstrating that the manner in which edges, needles, fibres, lines, fissures, etc. come into view are governed by the azimuth of the illuminating pencils.

This Slit Stop is manipulated in the same manner as the central stop. The observation may also be made with the two-lens condenser of N. A. 1.2, which should likewise be used on the immersion principle. Details will be found in the Zeitschr. f. wiss. Mikr. **25,** 424—430, 1908. With the slit stop we supply a plankton preparation adapted for demonstrating the principle for which the stop has been devised.

No. **11.4510. Paraboloid Condenser.**

This condenser furnishes an illumination of much greater intensity than the Immersion Condenser and Central Stop, in that it has a better spherical correction and is perfectly achromatic. It produces also greater contrasts as there are no separated lenses, which by multiple reflections are liable to give rise to hazy images.

No.		Marks	Codeword
11.4505	**Slit Stop** fitting the substage diaphragm carrier, with **demonstration object**	**2.—**	*Micantis*
11.4510	**Paraboloid Condenser,** in case	**40.—**	*Micantibus*

The Paraboloid Condensers are made to push into the substage collars of Stands I to IV in the same manner as the bright-field condensers, in the case of Stand V it should be pushed into the sliding sleeve below the stage of the microscope, the condenser or stop having been removed.

With other stands the Paraboloid Condenser cannot be used without special adaptation, unless the substage condenser sleeve happens to have a diameter of 36.8 mm. Failing this, the stand requires to be sent to us for adaptation. In the case of large stands which are not of our make it is generally sufficient to send as a gauge the existing condenser or a diaphragm cylinder with a stop attached.

The object slide should be placed on the microscope stage and joined to the Paraboloid Condenser by a drop of water or cedarwood oil, care being taken to obviate the introduction of air bubbles. With all dry lenses this suffices to establish dark ground illumination by total reflection at the cover-glass (Fig. 14).

With dry lenses of very high powers the contrasts in the image may be accentuated by employing so-called **Paraboloid Stops,** which reduce the aperture of the objectives to about 0.8. These stops are hung from above into the mounts of the objectives, and suitable stops of this kind are supplied for the Objectives DD, E, F, J, and $\frac{1}{12}$" as well as the Apochromatic Objectives of 4 mm and shorter foci. Their use is quite indispensable with immersion lenses since in their case dark ground illumination is not produced by total reflection at the surface of the cover-glass but arises from the fact that the illumination of the object is furnished exclusively by pencils of apertures above 1.0, whereas none but rays having apertures much below 1.0 can pass the stop hung into the objective. Under these conditions reflections cannot entirely be eliminated within the immersion lenses, and consequently the resulting contrast is less pronounced than that obtaining with dry lenses. The necessarily very considerable reduction of the aperture has naturally the effect of robbing the objectives of their superior resolving power. There is accordingly no advantage in using immersion lenses for observation by dark ground illumination, excepting as a means of securing high magnifications or when working without a gover-glass.

In the event of an objective and the Paraboloid Condenser being ordered at the same time we supply the appropriate Paraboloid Stops free of charge.

When arc light or sunlight is used in conjunction with a converging lens the Paraboloid Condenser becomes available for instantaneous photo-micrographic work and for obtaining cinematograph films of living bacteria, spermatozoa, etc. (Zeitschr. f. wiss. Mikr. **25,** 446—450, 1908).

Directions respecting the use of the Paraboloid Condenser are supplied in our booklet Mikro 230. For further information the reader is referred to papers published in the Z.-S. f. wiss. Mikr. **24,** 104—108, 1907, and **25,** 195—199 and 273—282, 1908.

When ordering Paraboloid Stops at any subsequent time the objectives for which they are required should be sent to us for adaptation, otherwise we cannot answer for their satisfactory performance.

No.		Marks	Codeword
	Paraboloid Stops, for Objectives DD, E, F, J, $\frac{1}{12}$" and Apochromatic Objectives of 4 mm and shorter foci	**1.—**	*Micantior*

No. **11.4560.** ***Small Plankton Condenser.**

The Paraboloid Condenser does not admit of a larger area than 2 to 3 mm across being illuminated, not even when the light is diffused by being made to pass through ground glass. For the purpose of surveying more extensive objects, such as Plankton, the requisite larger field of 6 to 7 mm can be realised by means of a specially devised **dark ground illuminating arrangement for large objects,** which is adapted for taking photo-micrographs with the Microplanar of 20 mm focus (see Price List respecting the Large Projection Apparatus, 2nd Edition, page 14, Reference Mikro 239), the requisite light being furnished by an arc lamp. This arrangement consists of the so-called **Small Plankton Condenser,** an **Arc Lamp** taking a small current, and a **powerful Condensing Lens** of an apertural ratio of about F/1.8, its focal length being about 78 mm (No. **13.9160,** page 109).

The Small Plankton Condenser fits into the sliding substage collar of our Stands Nos. **I** to **V.** The condenser is longer than the other condensers. When applied to any of the Stands **I** to **IV** it prevents the pivoted fitting which accommodates the diaphragm carrier from being swung into position. When used with Stand **V** the condenser should not be pushed into the sliding collar right up to the bottom flange, otherwise it will project beyond the microscope stage. The condenser is also available for use with the Binocular Stand **XA,** provided this is fitted with a substage sliding collar.

For ocular observation the Small Plankton Condenser can be used with low power objectives covering a large field, including Objective **A** and the Apochromatic Objective of 16 mm focus. For this purpose bright daylight will generally suffice to provide the requisite intensity.

In addition to the appliances for dark ground illumination which we have devised for the observation of microscopic objects we supply **Ultra Microscopic Devixes for the Observation of Ultra Microns contained in solid and liquid colloids.** These appliances are developments and improvements of the original apparatus introduced by us in 1903.

We supply the apparatus in two forms, viz, SIEDENTOPF and ZSIGMONDY's **Slit Ultra Microscope** for solid and liquid colloids and SIEDENTOPF's **Cardioid Ultra Microscope** for liquid colloids.

Detailed information respecting these ultra Microscopes will be found in our booklets Mikro 229 and Mikro 306 respectively.

No.		Marks	Codeword
11.4560	**Small Plankton Condenser,** in case	**25.—**	*Micantium*

III. Illumination by Incident Light.

For the examination of **opaque objects, metallurgical specimens,** etc. it is desirable and often necessary to provide a suitable device for adequately illuminating the object from above. When the free working distance of the objective is sufficiently long the object can generally be viewed by daylight or lamplight such as can be made to fall on it without any special aids and, when desirable, the lighting can be improved by placing in front of the microscope a Bull's Eye Condenser (No. 13.9250, p. 110). This applies to low power objectives up to AA, say. With higher powers, from Objective **B** upwards the working distance is too short to admit of direct illumination from without, and in all these cases it becomes necessary to illuminate the object by light passed through the objective. This is accomplished with the aid of a **Vertical Illuminator.**

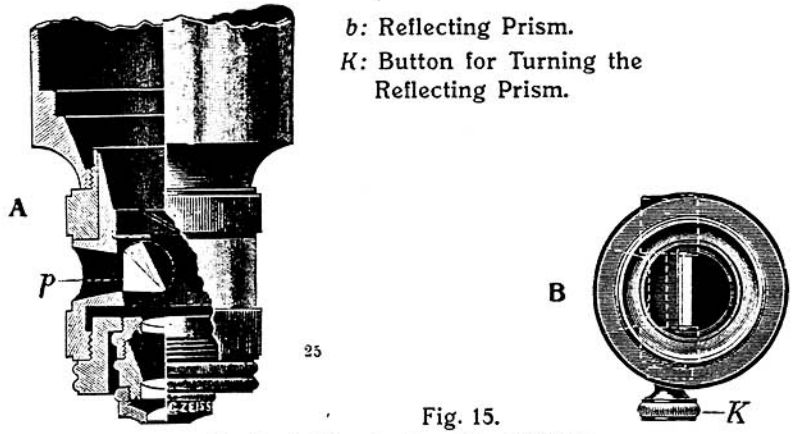

b: Reflecting Prism.
K: Button for Turning the Reflecting Prism.

Fig. 15.
Vertical Illuminator, No. 12.0400.
(Full Size.)

A:
Vertical Illuminator attached to microscope tube and carrying an Objective **C** in short mount; showing one half in cross section.

B:
View from above.

No. **11.0400.** ***Vertical Illuminator** (Fig. 15). The mount of the apparatus has at the side a window, through which the light proceeding from the lamp falls upon a reflecting prism covering half the aperture of the objective. Undergoing total reflection at the oblique face of the prism, the light traverses the objective and is thus concentrated upon the object. It will be understood that *the presence of the Vertical Illuminator does not encroach upon the field of view.*

To secure the best results while using the Vertical Illuminator it is most essential that the back lens of the objective should approach the prism as closely as possible, and hence all objectives intended to be used with the Vertical Illuminator should be fitted with specially shortened mounts. This does not interfere with their use for ordinary observation, provided they are not specially corrected in other respects. As a rule, objectives so mounted are corrected for a mechanical

No.		Marks	Codeword
12.0400	**Vertical Illuminator,** in case	**18.—**	*Micanto*

CARL ZEISS
JENA

Mikro 184, Beilage Nr. 3.

Betrifft die Seiten 37 und 38.

Vertikalilluminator Nr. 12.0400, Preis ℳ **18.—**, Telegr.-Wort: *Micanto*, wird nicht mehr hergestellt, weil es sich gezeigt hat, daß zur einwandfreien Beleuchtung eines Objektes eine Irisblende notwendig ist. Dagegen führen wir die **Vertikalilluminatoren Nr. 12.0410** und **Nr. 12.0450** weiter.

Infolge zweckmäßiger Verbesserungen im Fabrikationsverfahren konnten wir die Preise beider Apparate von ℳ **38.—** auf ℳ **25.—** ermäßigen:

Nr. 12.0410 Vertikalilluminator nach Nachet mit **Irisblende**,
im Behälter . . ℳ **25.—** Telegr.-Wort: *Middelding*

Nr. 12.0450 Vertikalilluminator nach Beck mit **Irisblende**,
im Behälter . . ℳ **25.—** Telegr.-Wort: *Middelen*

G. X. 14.

tube-length of 190 mm. When setting the draw-tube, the depth of the Vertical Illuminator should be deducted from this length, assuming the illuminator to be attached to the tube without any intermediate adapter.

Objects mounted under a cover-glass cannot be viewed through the Vertical Illuminator with dry lenses owing to the reflection of light which occurs at the cover-glass and in this case it will be necessary to use an oil-immersion lens to obviate the ocurrence of reflection. As a general rule objects so viewed should be uncovered, which again necessitates all objective of higher powers from the Apochromatic **8-mm** Objective and the Achromatic **D** Objective upwards being specially mounted for the absence of a cover-glass. Objectives so adjusted cannot, of course, be used for examining objects mounted under a cover-glass in the usual way. It is always advisable to cut down the pencil of light which proceeds from the lamp until it just covers that portion of the object which can be seen through the objective. This can readily be accomplished by illuminating the object with the aid of a bull's eye lens fitted with an iris-diaphragm. Suitable incandescent gas lamps and electric glow lamps are Items Nos. **13.9200** and **13.9210** listed on page 110.

Full particulars respecting the management of the Vertical Illuminator are given in the Directions, Mikro 89.

No. **12.0410. NACHET's Vertical Illuminator with Iris Diaphragm.**

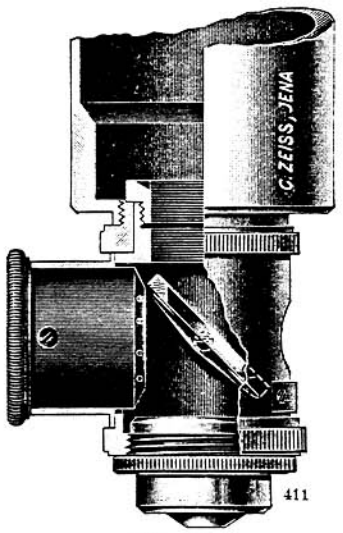

Fig. 16.
Vertical Illuminator with Iris Diaphragm and Plane Glass (Full Size.)

In its general arrangement this illuminator resembles No. 12.0400, from which it differs only in that the window at the side is fitted with a small iris-diaphragm. This serves like the iris-diaphragm of the ABBE illuminating apparatus to limit the aperture of the illuminating pencil.

No. **12.0450. BECK's Vertical Illuminator with Iris Diaphragm** (Fig. 16).

This Vertical Illuminator has the reflecting prism replaced by a plane glass inclined at an angle of 45^0 to the axis of the microscope. This arrangement has the advantage that it leaves the entire aperture of the objective free for observation, in consequence of which it is preferable for observations under a high magnification in that it does not interfere with the resolving power of the objectives.

For use with the **Binocular Microscopes** we provide a special illuminating arrangement, which will be described as part of these microscopes (p. 73).

No.		Marks	Codeword
12.4010	**NACHET's Vertical Illuminator with Iris-diaphragm,** in case	**38.—**	*Micantor*
12.4050	**BECK's Vertical Illuminator with Iris-diaphragm,** in case	**38.—**	*Micare*

B. Microscope Stages.

In their simplest forms the Stands of the Nos. **III** to **V** patterns are fitted with fixed round stages. The dimensions of the stages are such as to enable them to accommodate any of the usual sizes of object stages.

The **Stage Opening** of most stages has a diameter of 33 mm to admit of the unrestricted use of long focus lenses capable of embracing a large field of view. This opening can be reduced to 20 mm by the insertion of a stage diaphragm which fits the larger opening. The stages of Stands **VA** and **VI** have openings of a diameter of 17 mm only.

Stand **VI** is supplied with fixed **square** stage only.

Stands of the No. **I** pattern are fitted with **Revolving Stages;** whilst of the other stands Nos. **III, IV** and **V** only can be fitted with revolving stages either initially or at some subsequent date.

Mechanical Stages or devices for mechanically displacing objects in the plane of the stage can be appended to Stands **I, III, IV** and **V.**

Of **Movable Stages** we supply the following types:

No. **12.0630. Simplified Mechanical Stage** (Fig. 17).

The Simplified Mechanical Stage is a round non-revolving metal stage fitted with a movable plate. It is designed on the lines of the centring stages. The stage housing which carries the movable stage plate is attached by four screws to the stage bracket on the microscope in the same way as the fixed round stages. Within this housing the stage plate proper is capable of displacement by means of two screws with cylindrical milled heads against the tension of a buffer spring. The screws and the buffer spring are spaced at equal distances and hence the motions of the stage are only approximately at right angles to each other. A frontal backward and forward movement can be imparted to the stage by operating the two screws jointly and in the same sense, whilst a transverse motion can be obtained by operating them jointly in opposite directions, i. e. both outwards or both inwards. The range of the displacement is nearly 10 mm.

The stage plate has a diameter of 10 cm. The stage opening has the usual diameter of 33 mm and is fitted with a ring stop having an aperture of 20 mm.

The Simplified Mechanical Stage can be fitted to the Stands **III, IV** and **V** in the place of the fixed round stage. It may also be substituted for the latter

No.		Marks	Codeword
12.0630	**Simplified Mechanical Stage** (without substage sleeve)	**17.—**	*Miauler*

at any subsequent date. In the case of Stand **V** it is, in addition, fitted with a substage sleeve for the reception of the condensers. When subsequently obtaining a stage for a Stand **V** this sleeve fitting should be ordered likewise (No. **12.0311**). If an existing sleeve is to be used it should be sent for adaptation.

When supplying a Simplified Mechanical Stage as a subsequently added fitting we cannot accept in part exchange the existing fixed round stage.

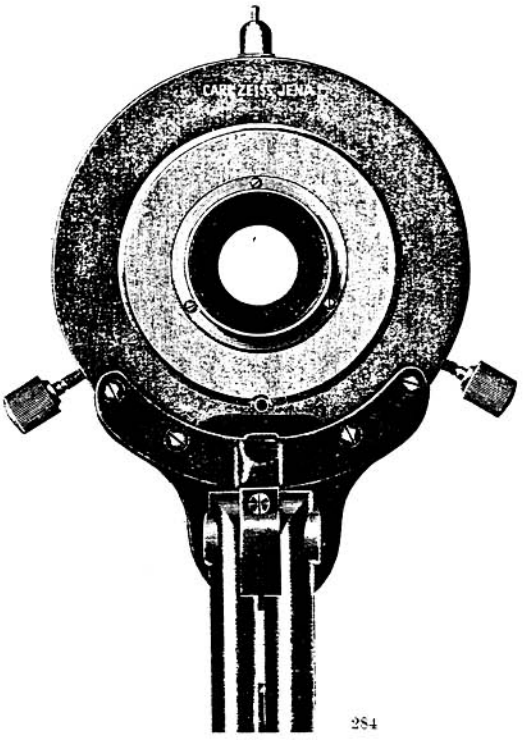

Fig. 17.
Simplified Mechanical Stage (with substage sliding collar for Stand V)
as seen from underneath.
($\frac{1}{2}$ Full Size.)

No. 12.0640. Simplified Revolving Mechanical Stage.

In this pattern of the Simplified Mechanical Stage the movable plate is capable of being rotated. The stage is in this case available for use as a revolving and centring stage or as a mechanical stage. Being capable of rotation, the adaptation of this stage renders a microscope to which it is fitted available for work in polarised light. When required for use with Stand **V** it should be fitted with a substage sleeve similar to Item No. **12.0630.**

No. 12.0656. Revolving Metal Stage.

The stands **IV F** and **V D** are fitted with a graduated metal stage which revolves about a fixed centre. This stage can be attached to the Stands **III, IV** and **V** in the place of the fixed stage when these stands are required to be fitted for work with polarised light. As this stage cannot be centred the deficiency requires to be supplied by providing a Centring Adapter No. **12.9210,** page 106) for the attachment of the objective to the microscope tube. In the case of Stand **V** the stage should be fitted with the Substage Condenser Sleeve No. **12.0312.**

No.		Marks	Codeword
12.0311	**Substage Condenser Sleeve** for Stands VBA and VBB	**1.50**	*Microptera*
12.0312	**Substage Condenser Sleeve** for Stand VD . .	**1.50**	*Microptere*
12.0640	**Simplified Revolving Mechanical Stage** . . .	**30.—**	*Miaulera*
12.0656	**Simplified Non-centring Metal Stage** with divided circle and index (without substage sleeve) . .	**26.—**	*Micarios*

No. **12.0670. Centring Revolving Vulcanite Stage.**

This Stage requires for its adaptation a Stage Centre Housing No. **12.0660.** Its motion of rotation cannot be locked. The stage has a diameter of 11.5 cm.

No. **12.0680. *Large Mechanical Stage** (Fig. 18).

The range of motion amounts to 50 mm in one direction and 35 mm in the other, and in either direction the displacements can be read by scales and verniers (Zeitschr. f. wiss. Mikrosk. **11,** 301—304, 1894). The stage is fitted with a third scale with vernier showing the position of the movable stop for the object slide. This scale renders the apparatus useful as a **Finder.** It assists also in the operation of centring the stage by means of a **Centring Glass,** which is an **Object Slide with a Cross ruled upon it.** Directions for using this Centring Glass are given in our leaflet Mikro 71.

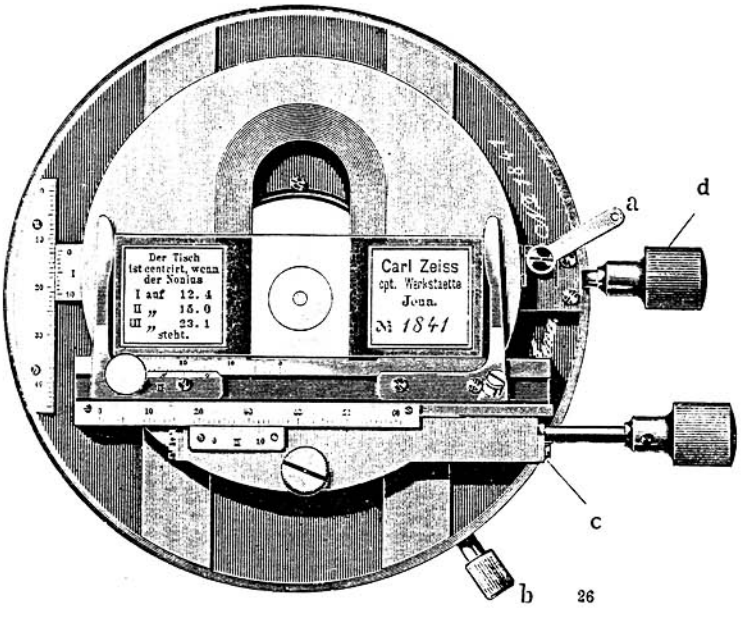

Fig. 18.
Large Mechanical Stage No. 12.0680.
(⅔ Full Size.)

No.		Marks	Codeword
12.0660	**Stage Centre Housing** for Nos. **12.0670** and **12.0680**	**17.—**	*Micarent*
12.0670	**Revolving Vulcanite Stage** for Stands **I, III** and **IV**	**25.—**	*Micaremus*
12.0680	**Large Mechanical Stage with Centring Glass for Stands, I, III** and **IV**	**100.—**	*Miaulerent*
12.0689	**Centring Glass** for use with the Large Mechanical Stage, in case	**4.—**	*Micarelle*

The Large Mechanical Stage is available for use with Stands I to IV only and requires for its adaptation a Stage Centre Housing No. **12.0660.** Stands **IA** and **B, IIID** and **E,** as well as **IVD** and **E** are permanently provided with this centre housing, whilst in the case of Stands **IIIA** to **IIIC** and **IVA** to **IVCB** it requires to be ordered together with the mechanical stage. The requisite adaptation can be made by the owner of the microscope.

The Large Mechanical Stage is of the revolving and centring pattern. The stage cannot, however, be rotated through a complete circle, the motion being limited in either direction by the presence of the slide fitting **c** and the milled head **d** respectively. The stage can be fixed in any position by means of the clamping screw **b.**

The motion in a forward and backward direction relatively to the observer can likewise be clamped by means of the small handle **a.**

The slide fitting **c,** which controls the transverse motion of the object, can be detached when the saw-cut screw by which it is secured has been released. This provides an unobstructed circular stage to which the object may be secured by means of the stage clips provided with it.

The Stages Nos. **12.0670** and **12.0680** are fitted to Stands **I, III** and **IV** only. They are readily interchangeable. They are not adaptable to Stand IC.

To exchange one of these stages against the other the first step is to remove the clamping screw *b* (Fig. 18) by which the Large Mechanical Stage is secured. Next, the two centring screws in the stage centre housing should be turned back until the stage ceases to follow. Pressing the stage gently forward against the buffer pin, it should be lifted out of the housing and replaced by the other stage, care being taken to ensure that the buffer pin in the housing may engage with the notch in the bearing ring on the stage.

In the event of these stages being required to be graduated at the circumference it will be necessary to fit the bearing ring with an index or vernier.

***Photo-micrographic Stage.** When photographing or projecting with the microscope it affords the greatest assistance to the operator if the stage of the microscope, beside being capable of rotation, enables him to impart an exceedingly slow motion to the object. Our **Photo-micrographic Stage** satisfies both requirements. It has a diameter of 100 mm and is capable of being displaced through a range of 10 mm in two directions at right angles to one another by means of **two co-axial milled heads.** The amount of their displacements is read by two scales and verniers. The stage is not fitted with a centring device and is not interchangeable with the Large Mechanical Stage or the Vulcanite Stage.

The Photo-micrographic Stage is accordingly supplied exclusively as an integral part of Stand IC.

Of **Devices for Mechanically Displacing the Object** along the surface of the microscope stage proper we supply, amongst others, the following:

No. **12.0800. *Small Attachable Mechanical Stage** (Fig. 19).

This stage, or more correctly, object displacer, is constructed on the principle originated by J. MAYALL jun. (Journ. Roy. Microsc. Soc. (2), **5**, 122, 1885) and serves to move the object slide along the surface of the stage in two directions at right angles to one another. It consists of two slide fittings, one of which travels upon the other at right angles to its sliding motion. Both are actuated by milled heads situated at the side. The displacements of the objects can be read off by means of two verniers and scales. The range of the motions, with the sliding milled head *a* pulled out to clear the slide fitting, is 50 mm in the trans-

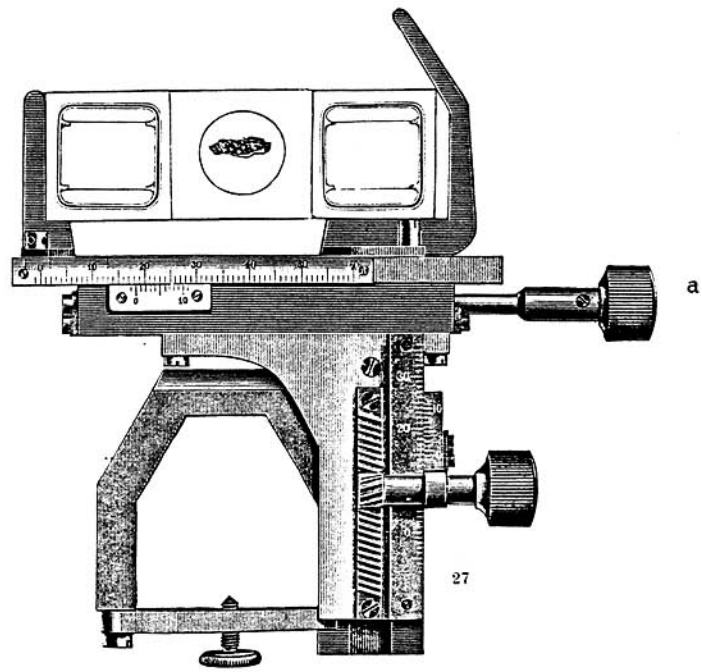

Fig. 19.
Small Attachable Mechanical Stage.
(⅔ Full Size.)

verse direction and 30 mm in the frontal direction at right angles to it. The apparatus is available for use as a **Finder.** Directions for using this stage are given in our pamphlet Mikro 123.

The Small Mechanical Stage is intended for use with Stands **IV**A, **IV**B, **IV**C, **V**A, **V**B, **V**C and **V**D. It attaches to the base of the slow motion prism post by means of the set screw *b* shown in Fig. 19. It is advisable to make a small indentation where the point of the screw meets the prism base so as to cause

No.		Marks	Codeword
12.0800	**Small Mechanical Stage,** without case . . .	**85.—**	*Micaretis*
12.0800k	**Case** for No. **12.0800**	**5.—**	*Micariae*

the stage to always occupy approximately the same position when attached to the microscope.

It is not satisfactory to use the small mechanical stage on Stand **VI** as, owing to its small size, it cuts down the motion of the stage to one half the available range. In the case of Stand **IV** the lower edge cannot be moved into the centre of the field.

*DETTO's Slide Bar.

DETTO's Slide Bar consists of a short curved fitting which serves for the attachment of the apparatus to the edge of round fixed stages, one end being for this purpose provided with an *L* screw clamp *b*, by which it can be fastened to the edge of the stage, whilst the other end has a short arm with a set pin *c* fitting the stage clip hole on the left, the stage clips being removed when the slide bar is to be attached. The curved bar *a* has near the middle a lug to which is

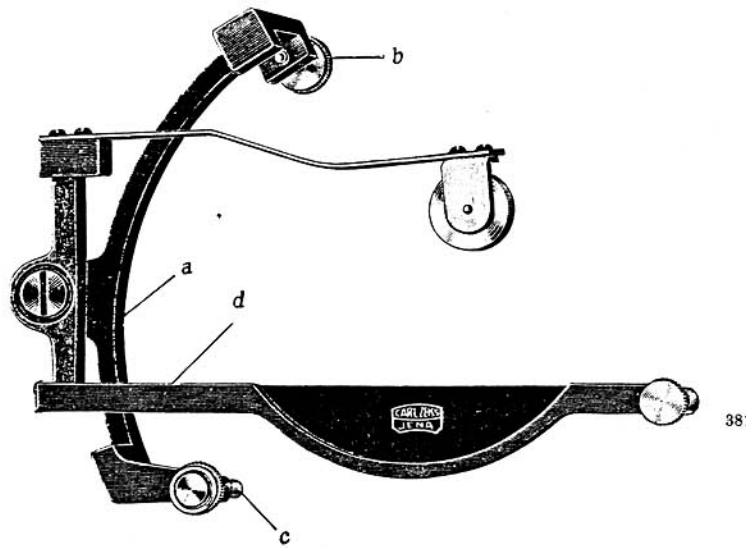

Fig. 20.
DETTO's Slide Bar No. 12.0816.
(½ Full Size.)

pivoted a short bar having attached to it at one end the slide bar *d* and at the other a steel spring carrying a small pulley. The bar and pulley both graze the surface of the microscope stage. The object slide is placed upon the stage between the bar and the pulley. The latter presses it against the slide bar. The object slide may then be displaced along the bar with the hand and both together may be moved radially about the pivot. This provides two movements which are nearly at right angles to one another. The Slide Bar serves accordingly as an **inexpensive mechanical object displacer** for Stands **III** to **V** with fixed round stages and will in the absence of a mechanical stage be found particularly useful for the systematic displacement of blood counting chambers and such like.

A detailed description of this device will be found in the Z.-S. f. wiss. Mikr. **23**, 301—307, 1906.

The Slide Bar is made in two patterns suitable for Stands **III** to **V**, viz. Nos. **12.0815** and **12.0816.**

No. **12.0815. Pattern No. II.** In this pattern the slide bar is a metal strip of prismatic section and of a uniform width throughout its entire length. This pattern is not to be recommended for use with high power objectives and when the slide is to be examined right up to the edge, as is often required in the case of smear preparation.

No. **12.0816. Pattern III.** In this pattern the slide bar is stiffened on the hogback principle and is available for use with objectives of the highest powers.

The No. I pattern is intended for projection work with Stand IC in conjunction with the Photo-micrographic Stage.

No. **12.0820. Revolving Stage Plate.**

This Stage Plate may be attached to the rectangular stage of Stand **XA**. It is provided with a centre ring which fits into the large opening in the stage of the microscope in the place of the smaller stage diaphragm.

Various other more or less specialised appliances have been devised for displacing objects on the stage, of which the following may be specified here:

The **Prism Rotator** No. **12.8700** or **12.8702** and the **Capillary Rotator** No. **12.8710** (pp. 104 and 105) are available for use in conjunction with the Binocular Stand **XA** as well as with Stands having stage openings of 33 mm diameter. The Capillary Rotator may also be fitted with stands whose stage opening is less than 33 mm.

The **Stage Screw Micrometer** No. **12.6350** (page 88) may be employed to impart to an object excessively delicate displacements in one direction only and furnishes a very exact means of measuring the amount of these small displacements.

Maltwood's Finder No. **12.9220** (page 106) is a simple and useful device for recording any given spot on a specimen and quickly finding it again at any future time under the microscope.

No.		Marks	Codeword
12.0815	**DETTO's Slide Bar,** Pattern II	**12.50**	*Micarius*
12.0816	**DETTO's Slide Bar,** Pattern III	**16.—**	*Micarum*
12.0820	**Detached Revolving Stage Plate** for Stand **XA**	**8.—**	*Micaschist*

C. Focussing Mechanisms.

The Coarse Focussing Adjustment. Apart from the Hand Microscope, all microscope stands specified in this catalogue are fitted with **Rack and Pinion Mechanism** for the coarse focussing adjustment. The racks as well as the pinions are cut on special machines designed by us, and the resulting motion is of such a degree of smoothness and precision that objectives of intermediate power can without difficulty be accurately focussed by the rack and pinion motion without the additional aid of the micrometer movement.

The **Fine Focussing Adjustment.** The micrometer slow motion introduced by us in 1886 (Z.-S. f. wiss. Mikr. **3,** 207—209, 1886) has proved absolutely reliable during the many years that it has been in use under all conceivable conditions. The introduction of a later form notwithstanding, it has therefore been retained in the designs of Stands **IV, V** and **VI.** The mechanism owes its excellent working qualities mainly to the fact that the motion of the micrometer screw is transmitted to the movable carrier of the microscope tube by a single contact between two hardened pieces of steel, which furnishes an exceedingly fine and uniform motion.

In the large **Stands I and III** the tube carrying frame is of an **entirely different design** and is fitted with **BERGER's slow motion,** which bears no resemblance to the old micrometer screw. This departure was introduced in 1898 and is described in detail in a paper by M. BERGER entitled, „Ein neuer Mikroskop-Oberbau", Z.-S. f. wiss. Mikr. **18,** 129—133, 1898.

In the design of these stands the prismatic slide post has been discarded in favour of a flat slide carriage, which provides likewise the bearing for the rack and pinion slide, both slide fittings being accordingly separated by a short distance only. At its lower end the micrometer screw is fitted in the place of the usual head with a **worm wheel** which engages with an **endless screw** (Fig. 21), by means of which it can be rotated. As in the older mechanism, the motion of the micrometer screw is transmitted to the movable tube carrying slide by a single contact between two pieces of extremely hard steel.

The entire mechanism, with the exception of the two milled heads by which motion is imparted to the endless screw, is enclosed within the overhanging body frame and is thus completely protected from external agencies. For the further protection of the screw the worm wheel engages with a device which checks its motion when the slide carriage to the slow motion has arrived at either limit of its travel. These limits are marked on the right hand side of the frame standard by two white lines on a black ground. The position of the micrometer screw can thus be always controlled by the position of the index mark on the slow motion slide carriage relatively to the two limit marks. This micro-

meter motion can be readily endowed with the quality of a **"safety" focussing device** in the case of objects which are difficult to find by setting the index of the slow motion slide to the lower limit mark and then racking down the coarse motion slide until the objective all but touches the object. The object should then be found and focussed by raising the tube by means of the micrometer screw. **So long as the coarse adjustment is not disturbed, neither the object nor the front lens are exposed to the possibility of being damaged by an excessive depression of the tube.**

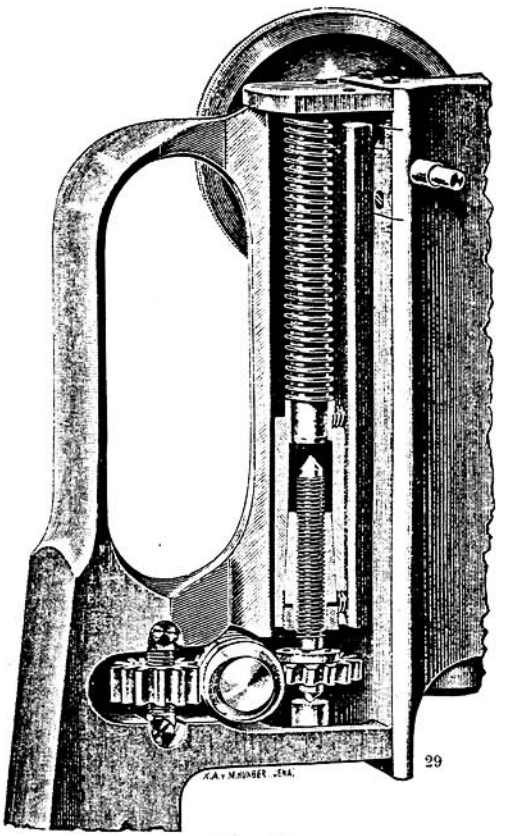

Fig. 21.
Mechanism of BERGER's Micrometer Movement.
(Full Size.)

The direction in which the milled heads to the fine adjustment are turned furnishes at once an indication as to whether the tube is rising or descending. The rotations and resulting motions of the tube are analogous to those of the rack and pinion motion. Also, **the fact that the axes of all the milled heads are parallel greatly facilitates the transition from one to the other.**

BERGER's Micrometer Movement cannot be adapted to stands fitted with the older type of slow motion.

Measurement of Thicknesses. The left milled head of BERGER's micrometer motion is **graduated,** each interval of the scale being equivalent to an

elevation or depression of 0.002 mm, whilst one complete revolution corresponds to 0.04 mm. When the requisite vertical displacement necessitates several revolutions of the milled head, these should be noted with the aid of a ring and index which slips over the milled head. Displacements of the tube can be thus read without difficulty to within 0.001 mm.

In the case of Stand **IV** with a micrometer screw of the older type the corresponding divisions are inscribed on the micrometer screw head. This scale admits of the motion of the microscope tube being read to within 0.005 mm.

Either device furnishes a means of **measuring thicknesses** with a considerable degree of accuracy. To this end the upper and the lower surface of the object whose thickness is to be measured should be focussed in succession and the corresponding positions of the scale relatively to the index noted. When the observation is made with dry lenses the difference between the two readings is not the thickness of the object but the thickness of an equivalent stratum of air.

If the refractive index of the object be known its true thickness can be calculated with a fair degree of accuracy from the thickness of the equivalent stratum of air. Conversely, the approximate refractive index of a substance may be found by this means when its thickness is known by the approximately correct formula

$$D = n\,d,$$

where D is the true thickness of the object, d the difference between the two readings noted, and n the refractive index of the medium.

For the purpose of ascertaining the thickness of the cover-glass which covers a mounted specimen, for example, it is near enough to take $n = 1.5$. When making a measurement of this kind it is best to use a higher power dry lens in conjunction with an intermediate eyepiece and observe by direct illumination.

For information respecting a more exact method of determining the thickness of cover-glasses with the aid of the micrometer movement the reader is referred to a paper by CZAPSKI entitled „Die Bestimmung von Deckglasdicken an fertigen Präparaten", Z.-S. f. wiss. Mikr. **5,** 482—484, 1888.

The **Draw Tube,** with which all stands are fitted with the exception of Stands **IX, X** and **XI** and the Hand Microscope, provides a means of lengthening and shortening the **tube-length,** a scale engraved on it showing the resulting length of the tube in any given position of the draw-tube (see pp. 8 and 9). It should, however, be borne in mind that this does not include the depth of any revolving nosepiece, sliding objective changer or other adapter which may be attached to the tube and whose depth should accordingly be allowed for (see pp. 8 and 49). At its lower end the draw-tube is provided with the standard screw thread for the attachment of lenses of very low power, for instance the auxiliary lens provided for use with the apertometer.

The **internal diameter of the draw-tube at the eyepiece end** is 23.3 mm.

D. Objective Changing Devices.

Revolving Nosepieces and Sliding Changers are attachments to the microscope tube which have been devised to change the objectives on the tube without going through the troublesome process of screwing them off and on each time.

The Sliding Objective Changers have this advantage over the Revolving Nosepieces that they afford a better means of bringing the objectives into agreement in the matter of central and focal adjustment, so that when one objective is focussed over a given spot the other objectives will also show this spot more or less accurately focussed in or near the centre of the field; though there are a few objectives whose mounts do not admit of this adjustment. The Sliding Objective Changers offer the further convenience that they impose no restrictions as to the number of objectives which may be used with them.

All objectives can be adjusted in this way **with the exception of a_0 to a_3, aa, a* and the immersion lenses.**

When objectives are ordered together with an objective changing device we invariably adjust their mounts to ensure their axial and focal agreement. The adjustment holds good, however, for the standard tube-length of 160 mm and a particular eyepiece only, and it is assumed that the observer is normal-sighted.

When using a nosepiece or sliding objective changer **15 mm should be allowed for the depth of the Revolving Nosepiece and 22 mm for that of the Sliding Objective Changer** (page 8).

The presence of these fittings increases the mechanical tube-length, as indicated on the draw-tube scale, by these amounts.

Revolving Nosepieces (Fig. 22). These are fitted with a union or clamping ring *a* with a milled edge, which serves to attach the nosepiece in any desired position, generally with the idle objectives directed symmetrically forward. The objectives screw into the capstan fitting, by the simple rotation of which any of the objectives may be placed into alignment with the tube, the capstan fitting being locked in its correct position by a spring catch.

Above the openings for the objectives the fixed part of the nosepiece has a cover *D* attached to it, which in all our nosepieces is curved to the same sphere by a process of our own. This plate forms a guard over the idle objectives and serves to protect them from dust.

We supply Nosepieces to accomodate Two Objectives (No. **12.1202**), Three Objectives (No. **12.1203**) and Four Objectives (No. **12.1204**).

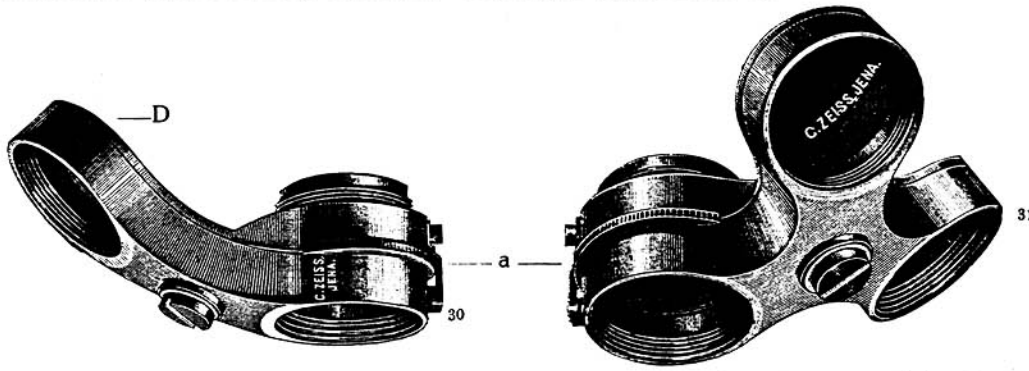

Revolving Nosepiece for Two Objectives. **Revolving Nosepiece for Three Objectives.**

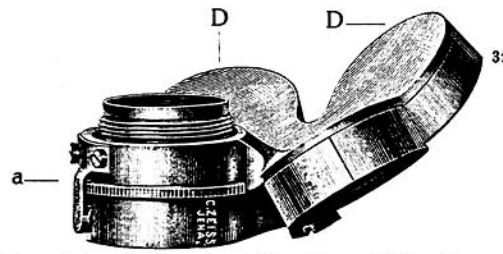

Revolving Nosepiece for Four Objectives.

Fig. 22.
(Full Size.)

***Sliding Objective Changers** (Fig. 23). These adapters are fitted with a device which enables the user of a microscope to centre each objective of the set in his possession, which may consist of an unlimited number. In addition, they are fitted with a focussing collar and locknut, by means of which all objectives having their mounts so adjusted that they will be approximately in focus when changed can be accurately set for focal agreement and the adjustment rendered permanent.

The Sliding Objective Changers consist of a Tube Slide and Objective Slides. A separate Objective Slide is required for each objective of the set.

The **Tube Slide** (No. **12.1210**) screws to the end of the microscope tube after the manner of an ordinary nosepiece and should by screwed thereto by means of the locknut with the entrance to the **V** slide facing frontwards or to

No.		Marks	Codeword
12.1202	**Revolving Nosepiece** for Two Objectives . . .	**15.—**	*Miasma*
12.1203	„ „ „ Three „ . . .	**20.—**	*Miasmen*
12.1204	„ „ „ Four „ . . .	**25.—**	*Miasmology*
	Sliding Objective Changers		
12.1210	Tube Slide	**8.—**	*Miasms*
12.1211	Object Slide, each	**8.—**	*Miassemos*

CARL ZEISS
JENA

Mikro 184, Beilage Nr. 8.

Betrifft Seite 50.

Die Revolver für zwei und drei Objektive werden nicht mehr angefertigt und geliefert. Wir liefern nur noch Revolver für vier Objektive zum Preise von M 20.– + den z. Zt. der Lieferung gültigen Satz des Teuerungszuschlages.

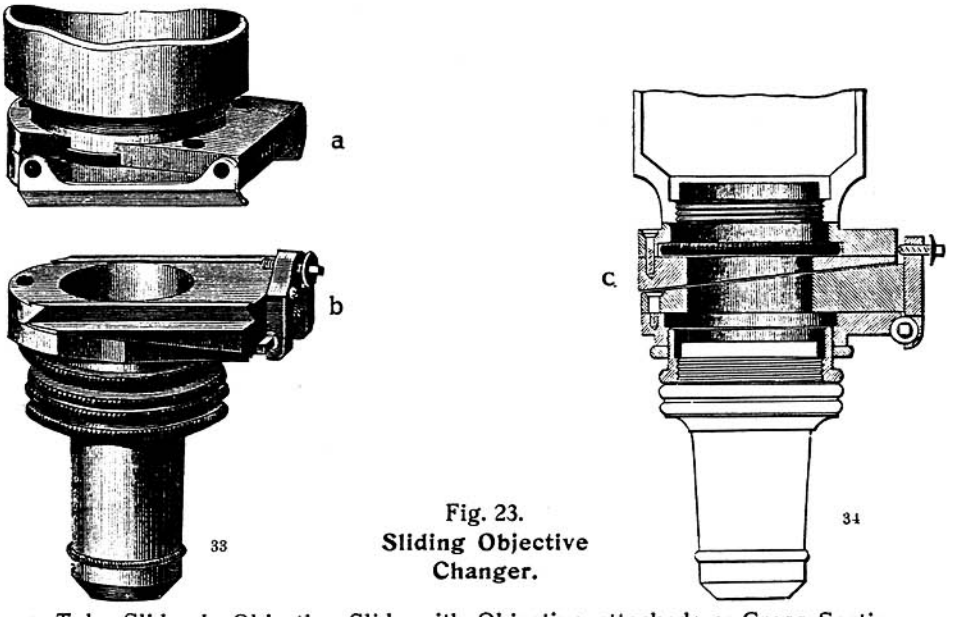

Fig. 23.
Sliding Objective Changer.

a: Tube Slide; *b:* Objective Slide with Objective attached; *c:* Cross Section. (Full Size.)

the side. The plane of the slide is inclined at angle of about 84° with respect to the axis of the tube (Fig. 23c).

The inclined plane of the **Objective Slide** (No. **12.1211**) is set at a similar angle, the effect being that when the slide is withdrawn the objective moves slightly away from the specimen. A screw stop, which can be set by means of a watchkey, provides the centring adjustment in the direction of the motion of the slide, whilst the adjustment at right angles to it is accomplished with the aid of a tangent screw, which can likewise be set with the aid of the watchkey. Further information is contained in the Directions for Using the Sliding Objective Changers, Mikro 82.

When using Sliding Objective Changers it is advisable to unscrew the objectives as rarely as possible. For their safe keeping and protection from dust we supply cases for three, six or a larger number of objectives attached to their slides. The sides of these cases are fitted with metal V slides which receive the objective slides together with the objectives. Below we list two popular patterns, viz. a **Leather-covered Case for Three Slides and Objectives** (No. **12.1413**) and a **Mahogany Case for Six Slides and Objectives** (No. **12.1416**).

No.		Marks	Codeword
12.1413	**Leather-covered Case** for Three Slides and Objectives	**6.—**	*Miastenia*
12.1416	**Mahogany Case** for Six Slides and Objectives .	**15.—**	*Miauen*

E. The Microscope Stands and their Different Patterns.

1) Large Stands.

Our Large Stands comprise Stands **I, I S** and **III.** In these stands the upper half with the stage and tube is inclinable and can be used with the tube vertical or horizontal and at any intermediate angle of inclination. They are fitted with BERGER's Micrometer Slow Motion with milled heads at the sides. The body frame, which carries the tube and focussing mechanisms, is fashioned in the form of a strong handle for carrying the microscope. These stands are adapted **for the most refined investigations** and may be used with the stage in its horizontal, inclined, or vertical position. They are supplied in finely polished mahogany cabinets fitted with lock and key. All these stands can be equipped with revolving nosepieces and sliding objective changers.

The subjoined specifications of the variously equipped stands do not include changing appliances, objectives, eyepieces, and condensers. The most extensively used condensers are specified as separate items.

a) Stands I.

The body of the stand is provided with wide outer tube and a draw-tube with slide collar and an eyepiece socket end of the standard diameter of 23.3 mm. The draw-tube is provided with a millimetre scale for setting it to the proper

No.	Stand	Equipment		Marks	Codeword
		Illuminating Apparatus	Object Stage		
12.2047	**IA**	**Complete ABBE Illuminating Apparatus without Condenser**	**Revolving and Centring Vulcanite Stage** No. 12.0670	**300.—**	*Miaul*
12.2048	**IB**		**Large Mechanical Stage** No. 12.0680	**375.—**	*Miaula*
12.2049	**IC**		**Photo-micrographic Stage**	**375.—**	*Miaulaient*
	Condensers according to requirement (pp. 29 et seq.)				
	1) **Condenser N. A. 1.2** No. 11.4120			**20.—**	*Miaron*
	2) **Condenser N. A. 1.4** No. 11.4130			**25.—**	*Miascite*
	3) **Swing-out Condenser N. A. 1.2** No. 11.4125 . .			**45.—**	*Miase*
	4) **Swing-out Condenser N. A. 1.4** No. 11.4135 . .			**50.—**	*Miaseis*
	5) **Aplanatic Condenser N. A. 1.4** No. 11.4140 . .			**60.—**	*Micropus*
	In addition, for Photo-micrographic Work:				
12.2099	**Accessory Fittings for Photo-micrographic Work** consisting of a Light-proof Connecting Funnel, Light-proof Connecting Sleeve, Adapters for the attachment of Microplanars, Centring Diaphragm, Moderating Glass, and Revolution Counter . .			**15.—**	*Miaulais*

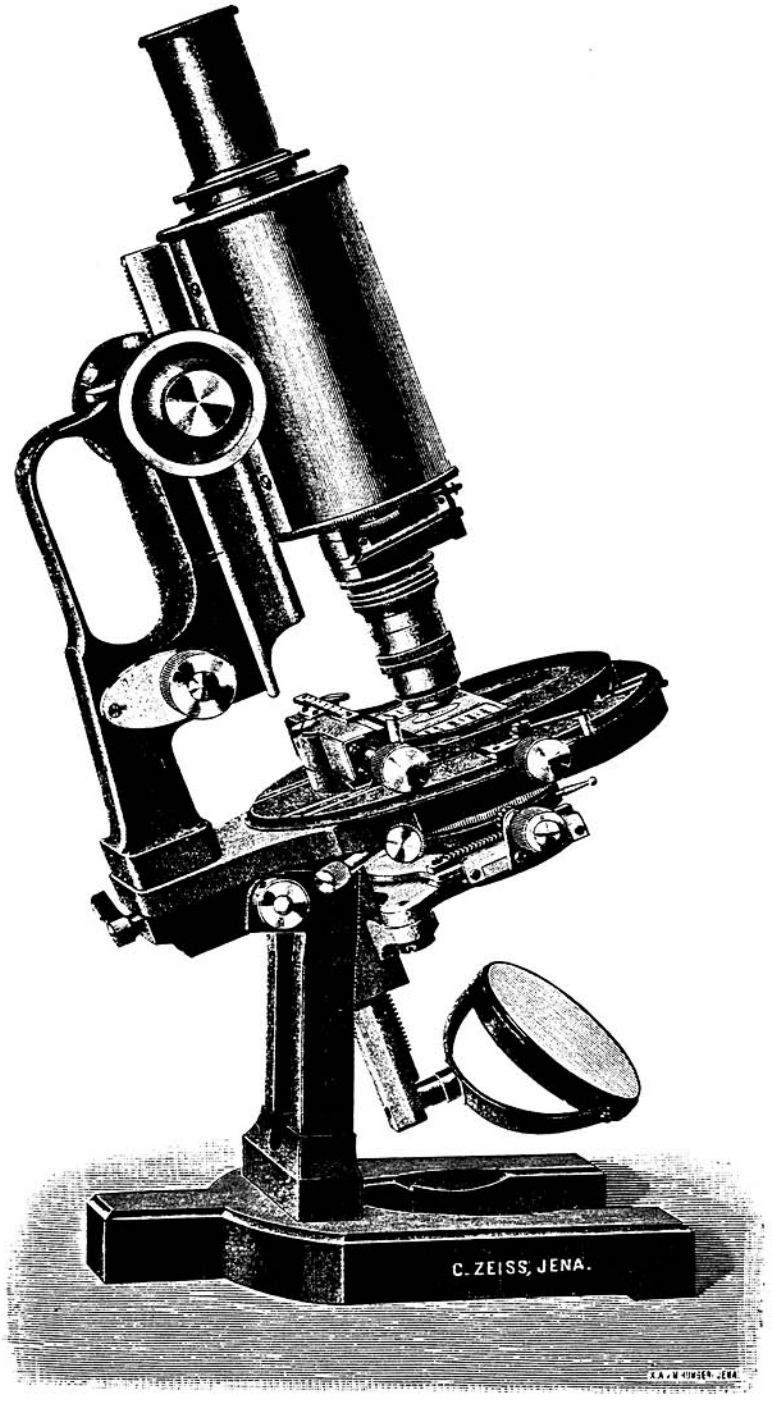

Fig. 24.

Stand I with Large Mechanical Stage, Sliding Objective Changer, Objective and Eyepiece.
(½ Full Size.)

tube-length. The body hinge is fitted with a lever handle for clamping it at any required inclination. Thanks to the wide diameter of the body tube these stands are available for unrestricted use of lenses of highest and lowest powers, including the Projection Lenses and Microplanars. These stands are accordingly **equally well adapted for ocular observation, microscopic projection and photo-micrography.** The foot is of the horseshoe pattern; it is heavily made of finely polished and lacquered brass.

b) Stand IS.

Stand IS differs from Stand I in that the stage is attached to a fitting by means of which it can be racked up and down in the direction of the axis of the microscope. This stand is accordingly particularly well adapted for every species of observation with incident light as well as for every kind of work with transmitted light. It lends itself also admirably for the examination of unusually thick objects. The foot is coated with crystal lacquer and is of an unusually heavy design.

For description of this stand see our booklet Mikro 236.

c) Stand III.

Stand III differs from Stand I in that it has not the wide tube of the latter. Hence projection lenses of very low power can either not at all be used with it or this can only be done by sacrificing the outer portion of the pencil of light transmitted by these lenses. When used for photo-micrographic projection or photo-micrography it can be so employed with microscope objectives only. In its adaptability for ocular observation it satisfies, on the other hand, the most exacting requirements. In the place of the polished foot it is fitted whith a horseshoe foot which is neatly coated with crystal lacquer.

The stand is so arranged that it may initially be acquired with an equipment comprising the indispensable components only and subsequently supplemented by the addition of other object stages or complements to the illuminating apparatus.

The stand is supplied with or without Revolving Nosepiece, as may be desired.

For detailed Description see our booklet Mikro 93.

No.	Stand	Equipment	Marks	Codeword
12.2347	ISA	**Revolving and Centring Vulcanite Stage** No. **12.0670** and **Complete ABBE Illuminating Apparatus** without condenser*)	385.—	*Miaulait*
12.2348	ISB	**Large Mechanical Stage** No. **12.0680** and **Complete ABBE Illuminating Apparatus without condenser***)	460.—	*Miaulames*

*) Suitable Condensers are specified on page 52.

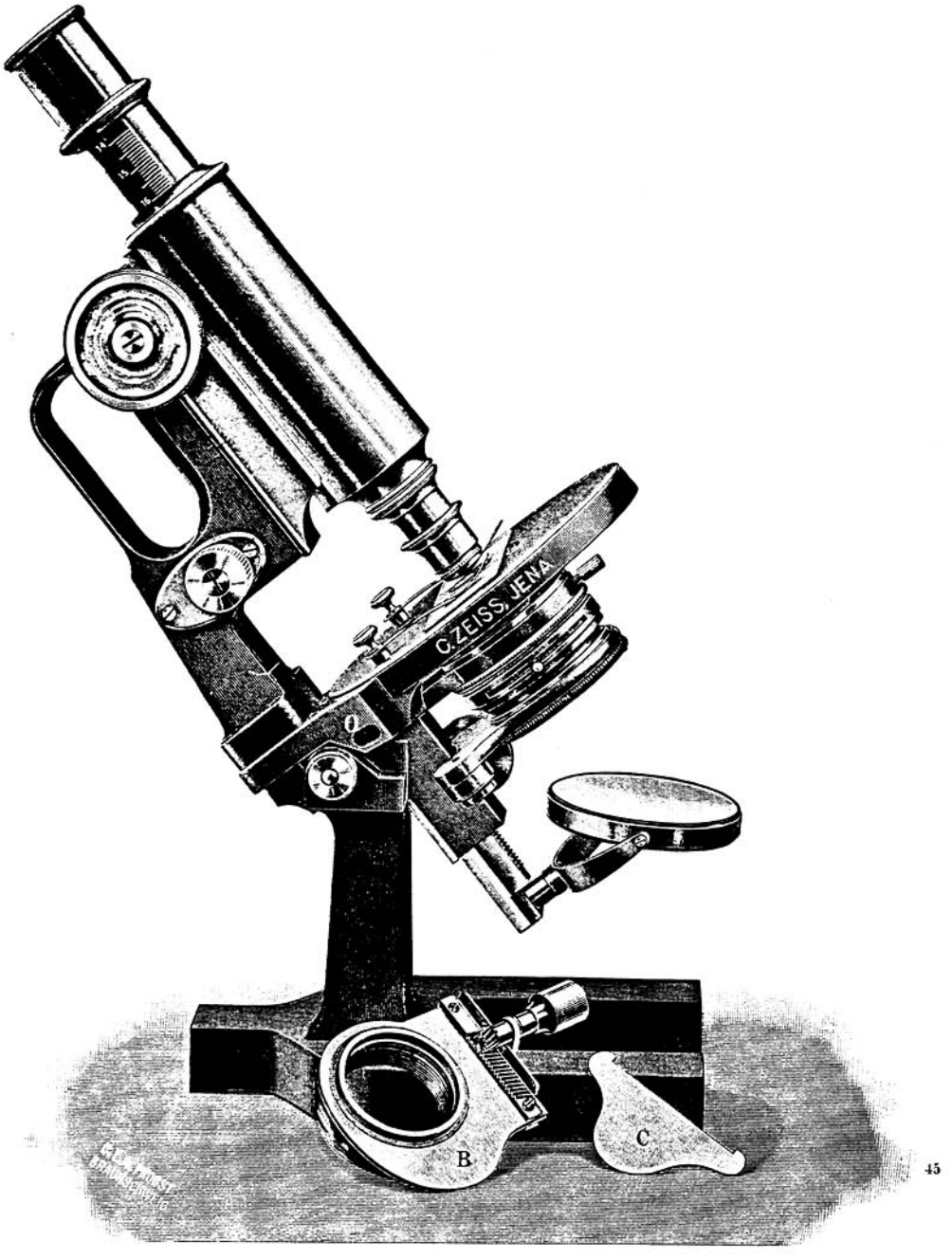

Fig. 25.

Stand III B with Objective and Eyepiece, also Diaphragm Carrier (B) No. 12.0120 and Key (C) for attaching it.
(½ Full Size.)

No.	Stand	Equipment: Illuminating Apparatus	Equipment: Object Stage	Marks	Codeword
12.2622	IIIA	ABBE Illuminating Apparatus without Diaphragm Carrier and Iris Diaphragm and without Condenser	Fixed Round Stage of 11 cm diameter. . . .	200.—	*Miaulant*
12.2623	IIIAA		Simplified Mechanical Stage No. 12.0630 . . .	210.—	*Miaulante*
12.2632	IIIB	ABBE Illuminating Apparatus with Iris Diaphragm but without Diaphragm Carrier and without Condenser	Fixed Round Stage of 11 cm diameter. . . .	215.—	*Miaulard*
12.2633	IIIBA		Simplified Mechanical Stage No. 12.0630 . . .	225.—	*Miaulasse*
12.2642	IIIC	Complete ABBE Illuminating Apparatus without Condenser	Fixed Round Stage of 11 cm diameter. . . .	230.—	*Miaulat*
12.2643	IIICA		Simplified Mechanical Stage No. 12.0630 . . .	240.—	*Miaulates*
12.2644	IIICB		Simplified Revolving Stage No. 12.0640 . . .	253.—	*Miaule*
12.2647	IIID	Complete ABBE Illuminating Apparatus without Condenser	Revolving and Centring Vulcanite Stage No. 12.0670	265.—	*Miauled*
12.2648	IIIE		Large Mechanical Stage No. 12.0680	340.—	*Miaulees*

Necessary Alternative Additions to the Illuminating Apparatus (pp. 28 et seq.)

1) Cylinder Diaphragm No. 11.4100 .	for low magnifications as obtained with objectives up to D or the apochromatic 8 mm	4.—	*Miaria*
2) Iris Cylinder Diaphragm No. 11.4105		14.—	*Miariais*
3) Two-lens Condenser N. A. 1.2 No. 11.4120		20.—	*Miaron*
4) Three-lens „ „ „ 1.4 No. 11.4130		25.—	*Miascite*
5) Swing-out „ „ „ 1.2 No. 11.4125		45.—	*Miase*
6) Swing-out „ „ „ 1.4 No. 11.4135		50.—	*Miaseis*

The following **Supplementary Fittings** can be added **subsequently** to the Illuminating Apparatus:

For Stands IIIA and IIIAA:

Diaphragm Carrier No. 12.0120 and Iris Diaphragm No. 12.0130 . . . . . 30.— *Miaulement*

For Stands IIIB and IIIBA:

Diaphragm Carrier No. 12.0120 . . . . . 20.— *Miasmal*

Any of the following **Stages** may be supplied subsequently **for attachment in the place of existing stages:**

Simplified Mechanical Stage No. 12.0630 for Stands III, A, B and C	17.—	*Miauler*
Simplified Revolving Mechanical Stage No. 12.0640 for Stands III, A, B and C	30.—	*Miaulera*
Revolving Vulcanite Stage No. 12.0670 with Centre Housing No. 12.0660 for Stands III, A, AA, B, BA and CA . .	42.—	*Miaulerai*
Large Mechanical Stage No. 12.0680 with Centre Housing No. 12.0660 for Stands III, A, AA, B, BA, C, CA and CB	117.—	*Miaulerais*
Large Mechanical Stage No. 12.0680 for Stand III, D . .	100.—	*Miaulerent*

Existing Stages are not taken in part exchange.

2) Medium Sized Stands.

The Medium Sized Stands are all variants of Stand **IV.** The various patterns derived from this prototype differ mainly by the equipment of the illuminating apparatus and the design of the stages.

Stand IV.

The body of this stand is fitted with the older form of micrometer movement (Fig. 26). The micrometer head is graduated. The substage is so designed that the illuminating apparatus may be elaborated progressively. The stand has a fixed round stage, which may be replaced at any later period by revolving and mechanical stages. The stand may be fitted with a revolving nosepiece or sliding objective changer. It is supplied in a finely polished mahogany case fitted with lock and key.

For **Detailed Description** see Booklet Mikro 183.

The subjoined prices do not include nosepieces, objectives, eyepieces, or condensers, the latter of which are specified as separate items.

No.	Stand	Equipment		Marks	Codeword
		Illuminating Apparatus	Object Stage		
12.3022	IVA	ABBE Illuminating Apparatus without Diaphragm Carrier and Iris Diaphragm and without Condenser	Fixed Round Stage of 11 cm diameter . . .	175.—	*Miaulerez*
12.3023	IVAA		Simplified Mechanical Stage No. **12.0630** . .	185.—	*Miauleriez*
12.3032	IVB	ABBE Illuminating Apparatus with Iris Diaphragm but without Diaphragm Carrier and without Condenser	Fixed Round Stage of 11 cm diameter . . .	190.—	*Miaulerons*
12.3033	IVBA		Simplified Mechanical Stage No. **12.0630** . .	200.—	*Miauleront*
12.3042	IVC	Complete ABBE Illuminating Apparatus without Condenser	Fixed Round Stage of 11 cm diameter . . .	205.—	*Miauleur*
12.3043	IVCA		Simplified Mechanical Stage No. **12.0630** . .	215.—	*Miauleuse*
12.3044	IVCB		Simplified Revolving Mechanical Stage No. **12.0640**	228.—	*Miauleuses*
12.3047	IVCD		Revolving and Centring Vulcanite Stage No. **12.0670**	240.—	*Miaulez*
12.3048	IVE		Large Mechanical Stage No. **12.0680**	315.—	*Miaullez*
12.3085	IVF	Complete ABBE Illuminating Apparatus without Condenser, with Polariser No. I and Selenite Films Red I. Order	Revolving Non-centring Stage graduated at the periphery, No. **12.0656**		
		Tube with Centring Device for the Objectives and Analyser No. I to rest on eyepiece . . .		275.—	*Miauling*

CARL ZEISS
JENA

Mikro 184, Beilage Nr. 7.

Betrifft die Seiten 57-59.

Stativ IV wird nicht mehr angefertigt und geliefert.

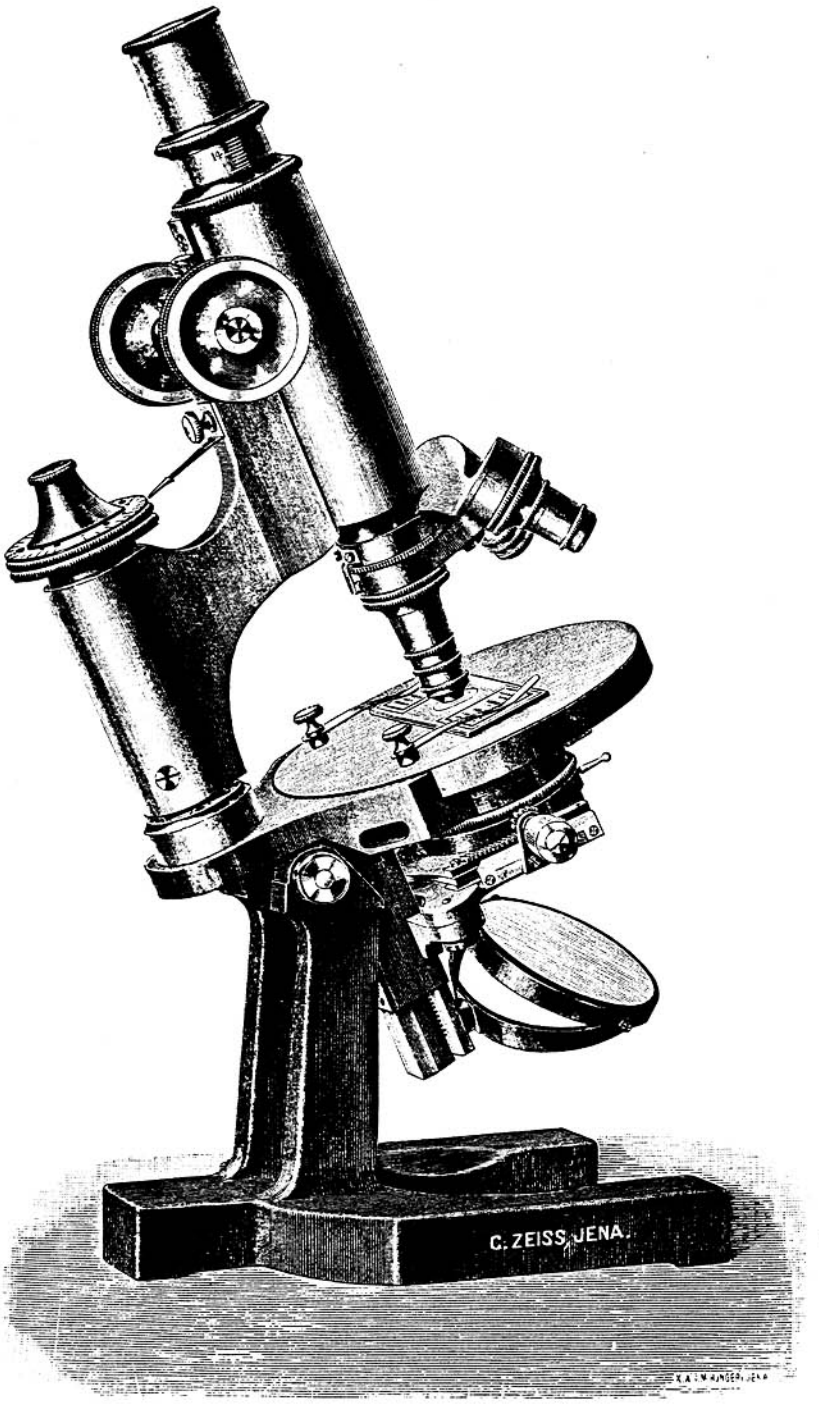

161

Fig. 26.

Stand IVC
with Revolving Nosepiece, Three Objectives, and Eyepiece.
(½ Full Size.)

	Marks	Codeword
Necessary Alternative Additions to the Illuminating Apparatus (pp. 28 et seq.):		
1) **Cylinder Diaphragm** No. **11.4100** . (for low magnifications as obtained with objectives up to D or the apochromatic 8 mm)	**4.—**	*Miaria*
2) **Iris Cylinder Diaphragm** No. **11.4105** (for low magnifications as obtained with objectives up to D or the apochromatic 8 mm)	**14.—**	*Miariais*
3) Two-lens Condenser N. A. 1.2, No. **11.4120**	**20.—**	*Miaron*
4) Three-lens Condenser N. A. 1.4, No. **11.4130**	**25.—**	*Miascite*
5) Swing-out Condenser N. A. 1.2, No. **11.4125**	**45.—**	*Miase*
6) Swing-out Condenser N. A. 1.4, No. **11.4135**	**50.—**	*Miaseis*
The following **Supplementary Fittings** can be added **subsequently to the illuminating apparatus:**		
For Stand **IV**A and **IV**AA:		
Diaphragm Carrier No. **12.0120** and **Iris Diaphragm** No. **12.0130**	**30.—**	*Miaulement*
For Stands **IV**B and **IV**BA:		
Diaphragm Carrier No. **12.0120**	**20.—**	*Miasmal*
Any of the following **Stages** may be **supplied subsequently for attachment in the place of existing stages:**		
Simplified Mechanical Stage No. **12.0630** for Stands **IV**, A, B and C	**17.—**	*Miauler*
Simplified Revolving Mechanical Stage No. **12.0640** for Stands **IV**, A, B and C	**30.—**	*Miaulera*
Revolving Vulcanite Stage No. **12.0670** with Centre Housing No. **12.0660** for Stands **IV**, A, AA, B, C and CA	**42.—**	*Miaulerai*
Large Mechanical Stage No. **12.0680** with Centre Housing No. **12.0660** for Stands **IV**, A, AA, B, BA, C and CA	**117.—**	*Miaulerais*
Large Mechanical Stage No. **12.0680** for Stand **IV**, D . .	**100.—**	*Miaulerent*

Existing Stages are not taken in part exchange.

Stand IVF is particularly well adapted for histological investigations with polarised light.

The swing-out condensers lose much of their utility when the condenser is required to be frequently exchanged, say, for the Paraboloid Condenser used for establishing dark ground illumination.

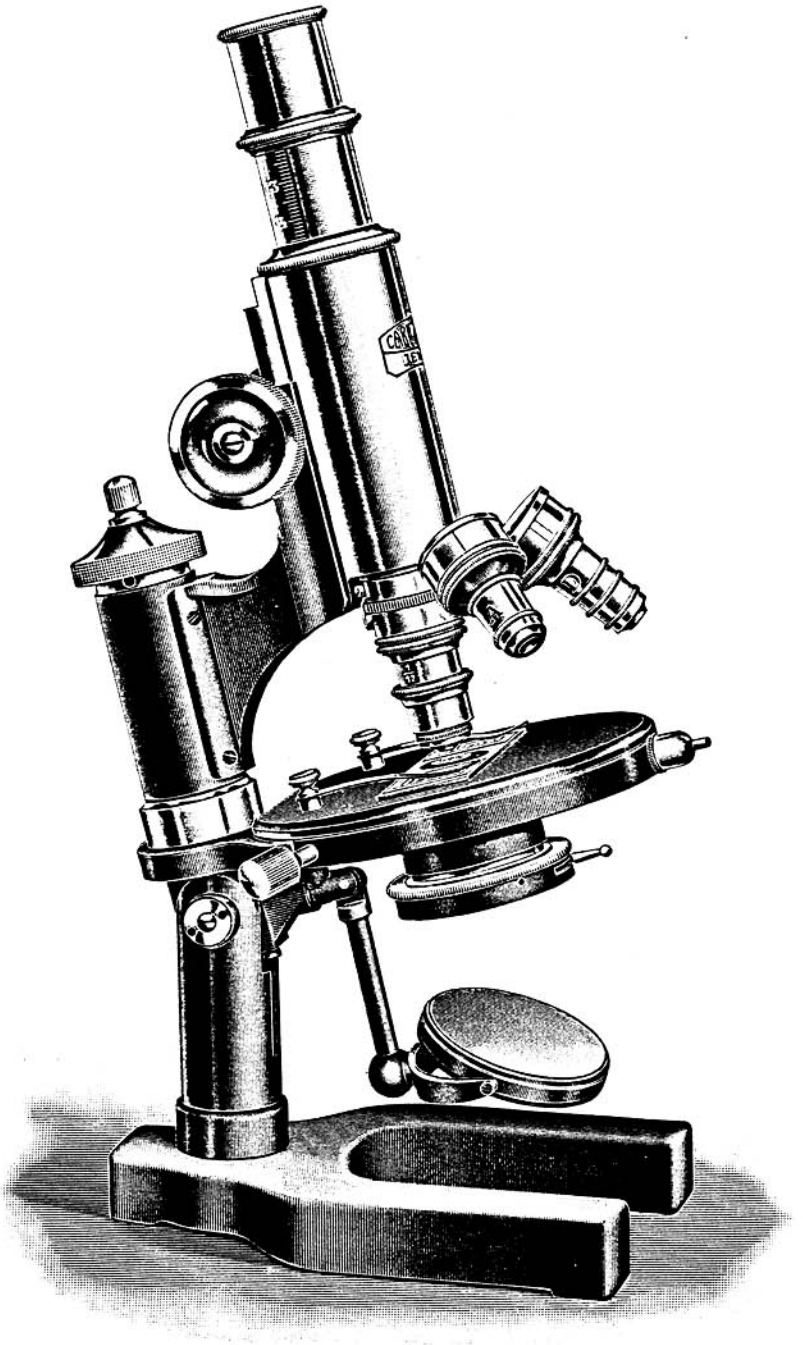

390

Fig. 27.
Inclinable Stand VBA
with Revolving Nosepiece, Three Objectives and Eyepiece.
(½ Full Size.)

3) Small Stands.

a) Stand V.

Laboratory and Class Microscope.

The body of this microscope is fitted with the **older form of micrometer screw.** The micrometer head is not graduated. When equipped in its simplest manner, the stand is fitted below the stage with three sliding stops in the place of the customary cylinder diaphragm. The complete ABBE Illuminating Apparatus cannot be fitted to Stand **V**; it is, however, available for the attachment of various condensers with centrally attached iris-diaphragm (page 31) and the Paraboloid Condenser, all of which fit the substage sliding collar. The stands of the No. **V** type are supplied in an **inclinable** form **(with hinge)** or in a **rigid** form **(without hinge).** The stand is accommodated in a finely polished mahogany case fitted with lock and key.

A Detailed Description will be found in our Booklet Mikro 259.

Stand V is not supplied without Optical Equipment.

The Prices given in the subjoined specification do not, however, include objectives, eyepieces, condensers or nosepieces. The prices of these components, which may be selected to suit the requirements of the purchaser, will be found under their respective headings. A Selection of Completely Equipped Microscopes will be found on pp. 113 et seq. and in our Booklet Mikro 259.

No.	Stand		Equipment	Marks	Codeword
12.3411	VA	Inclinable	Fixed Round Stage of 11 cm diameter with three Sliding Stops	**90.—**	*Miaulions*
12.3511		Rigid		**80.—**	*Miaulons*
12.3412	VB	Inclinable	Fixed Round Stage of 11 cm diameter with Substage Sliding Sleeve	**86.—**	*Miaust*
12.3512		Rigid		**76.—**	*Miaute*
12.3413	VBA	Inclinable	Simplified Mechanical Stage No. **12.0630** with Substage	**96.—**	*Miautest*
12.3513		Rigid		**86.—**	*Miauw*
12.3414	VBB	Inclinable	Simplified Mechanical Revolving Stage No. **12.0640** with Substage Sliding Sleeve	**109.—**	*Miauwen*
12.3514		Rigid		**99.—**	*Miaveritis*
12.3485	VD	Inclinable	Revolving Stage graduated at the periphery, No. **12.0656**; also Centring Adapter for attachment to the tube, Polariser No. II, Selenite Films Red Ist Order, and Analyser No. I	**144.—**	*Miavolate*
12.3585		Rigid		**134.—**	*Miavolera*

Necessary Alternative Additions (see page 31):

1) **Cylinder Diaphragm** No. **11.4100**	for VB, BA and BB, for low magnifications as obtained with objectives up to D inclusive	**4.—**	*Miaria*
2) **Iris Cylinder Diaghragm** No. **11.4105**		**14.—**	*Miariais*
3) **Condenser N. A. 1.0** with Iris Diaphragm, No. **11.4310** for VB, BA, BB, and D		**24.—**	*Miasmata*
4) **Condenser N. A. 1.2** with Iris Diaphragm, No. **11.4320** for VB, BA and BB		**30.—**	*Miasmatico*
In the event of the Condensers Items 3) and 4) being required for use with Stand VA it will ne necessary to add a **Substage Sliding Sleeve** for Stand VA No. **12.0310**		**1.50**	*Miasmatisch*

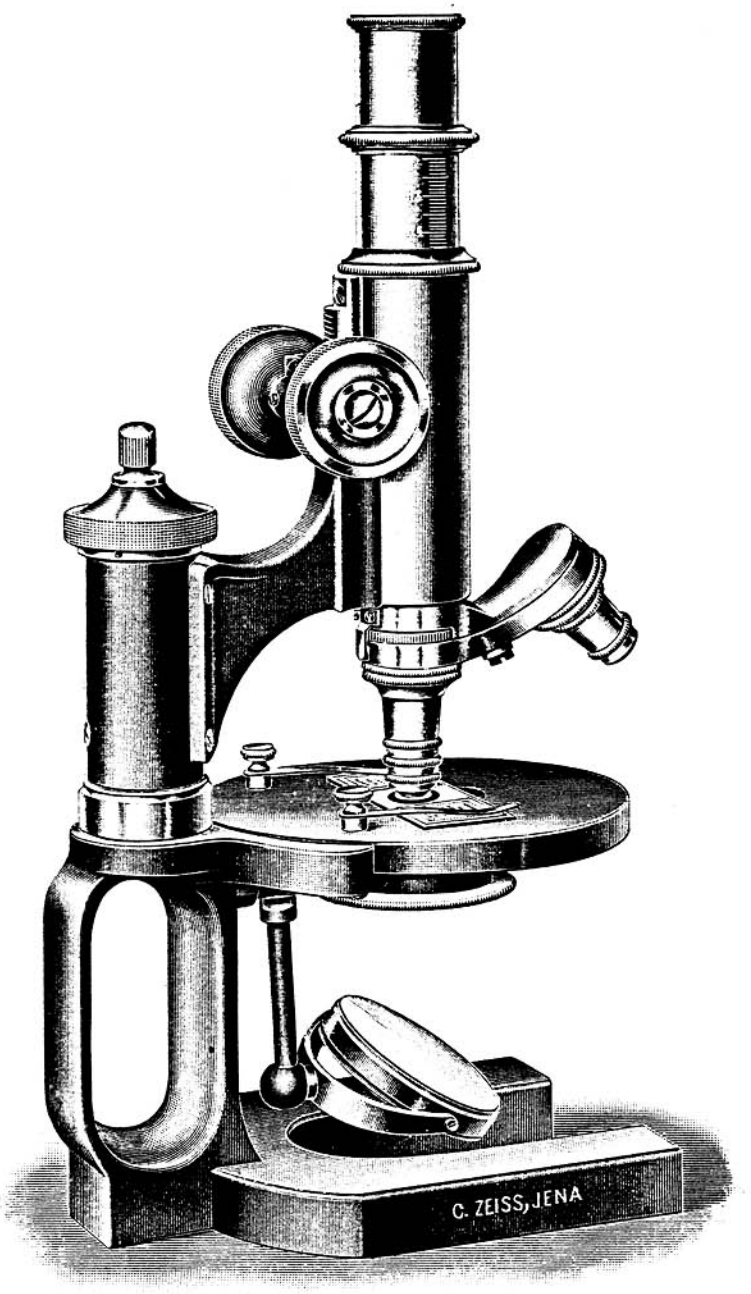

391

Fig. 28.
Stand VB, Non-inclinable Pattern with Double Nosepiece, Objectives A and D, and Eyepiece.
(½ Full Size.)

Stands V may be supplied with or without nosepieces (pp. 49 and 50), **as may be desired.**

In the event of a considerable number of stands of the No. V pattern being purchased under one order we are prepared to supply them without mahogany cases. This reduces the price by Mark 16.50 for each stand.

b) Stand VI.

This stand, as shown in Fig. 30, has a **fixed square stage measuring 80 × 80 mm.** The **body is hinged** and can be tilted until the tube is horizontal. Like Stand **V**, it has a **slow motion of the older pattern.** The micrometer screw head is not graduated. The stand is contained in a finely polished mahogany cabinet fitted with lock and key. It can be supplied with or without a nosepiece.

The illumination is furnished by a mirror which moves in all directions. On the underside the stage is fitted with a sliding collar for the accommodation of cylinder diaphragms or a condenser.

Owing to its compact design Stand **VI** makes a convenient Travelling Microscope (Fig. 29). When supplied for this purpose the instrument is fitted in a small Leather or Canvas Case with Shoulder Strap together with a few mounting ap-

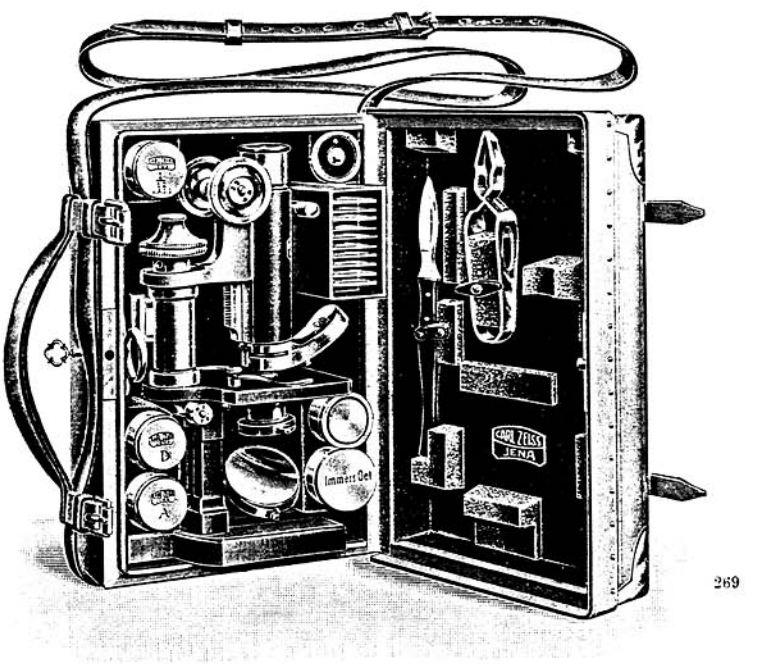

Fig. 29.
Travelling Microscope in Leather Case with Optical Equipment and Mounting Adjuncts.
(About ⅓ Full Size.)

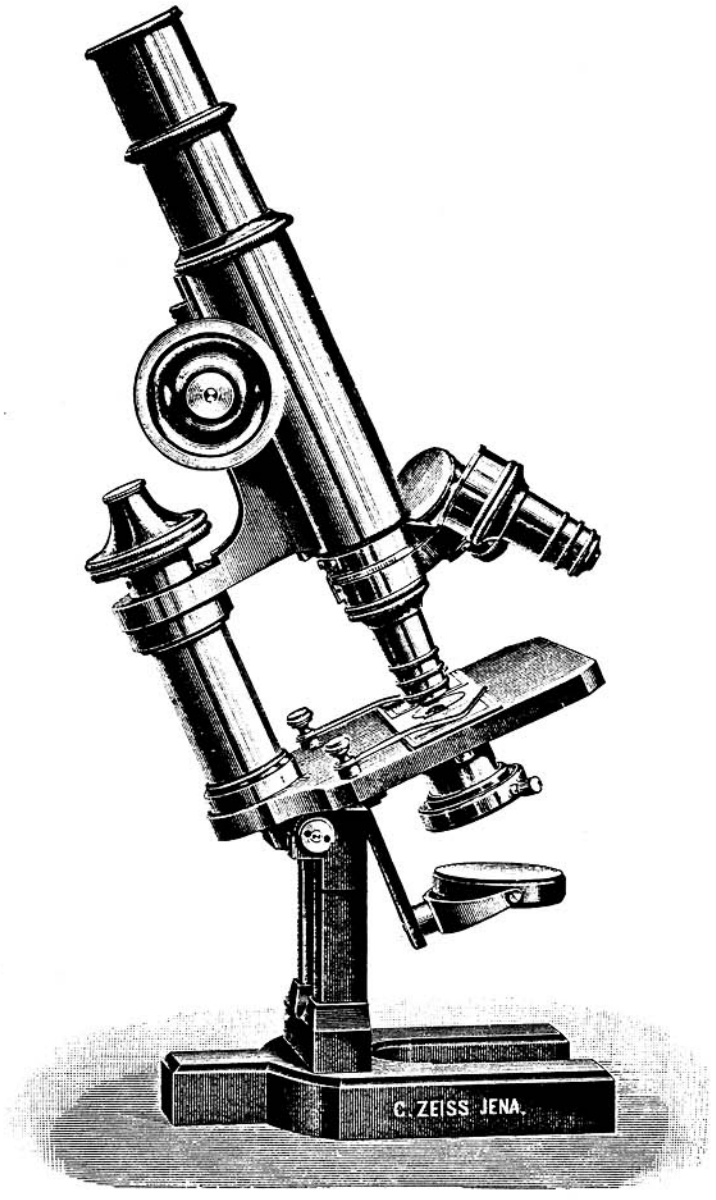

49

Fig. 30.
Stand VI
with Triple Nosepiece, Three Objectives and Eyepiece.
(½ Full Size.)

pliances. The gross weight of this microscope with its optical equipment of three objectives and three eyepieces as well as the mounting adjuncts together with the case amounts to 8¾ lbs. The outfit of the Travelling Microscope includes 10 object slides and 100 cover-glasses, as well as a metal box with glass bottle for immersion oil. The prices for Stand **VI** do not include objectives, eyepieces or a nosepiece.

c) Stand IX.

Stand **IX** is intended for **auxiliary use in laboratories and for industrial and manufacturing purposes.** The stage is circular and has a diameter of 100 mm with a stage opening of 33 mm, which can be reduced by the insertion of a stage stop. The plane and concave mirror can be tilted in all directions. Three stops and a blue glass disc are supplied with the stand for insertion in the stage in lieu of cylinder diaphragms. The tube is not extensible. The stand is supplied in an alderwood case.

Stand **IX** (Fig. 31) is fitted with a Rack and Pinion Coarse Focussing Adjustment only, the workmanship of which is, however, such that objectives of medium power and an aperture not exceeding 0.65, say Objective *D*, can be focussed by its means without difficulty.

No.			Marks	Codeword
12.4010	**Stand VI** in Mahogany Case		**128.—**	*Mibore*
	Necessary Alternative Additions (p. 32):			
	1) **Cylinder Diaphragm** No. **11.4400**	Adapted for use with objectives not exceeding in power the achromatic D or apochromatic 8 mm	**2.—**	*Miasmatist*
	2) **Iris Cylinder Diaphragm** No. **11.4405**		**8.—**	*Miasmatous*
	3) **Condenser** N. A. 1.0 with Iris Diaphragm No. **11.4410**		**22.—**	*Miasme*
12.4020	**Travelling Microscope Stand VI in Leather Case**		**148.—**	*Mibsam*
	and Illuminating Apparatus No. **11.4410** . . .		**22.—**	*Miasme*
12.4025	**Travelling Microscope Stand VI in Canvas Case** (for use in the tropics)		**148.—**	*Mica*
	and Illuminating Apparatus No. **11.4410** . . .		**22.—**	*Miasme*
	Accessories:			
12.4090	**Mounting Appliances** for Travelling Microscopes: Straight Forceps, Cornet Forceps, Straight Scissors, Scalpel, Straight Dissecting Needle with Metal Handle, and Metal Box for Vaseline		**9.—**	*Micabam*
12.4410	**Stand IX** in Case, without nosepiece, objective or eyepiece		**50.—**	*Micabamus*

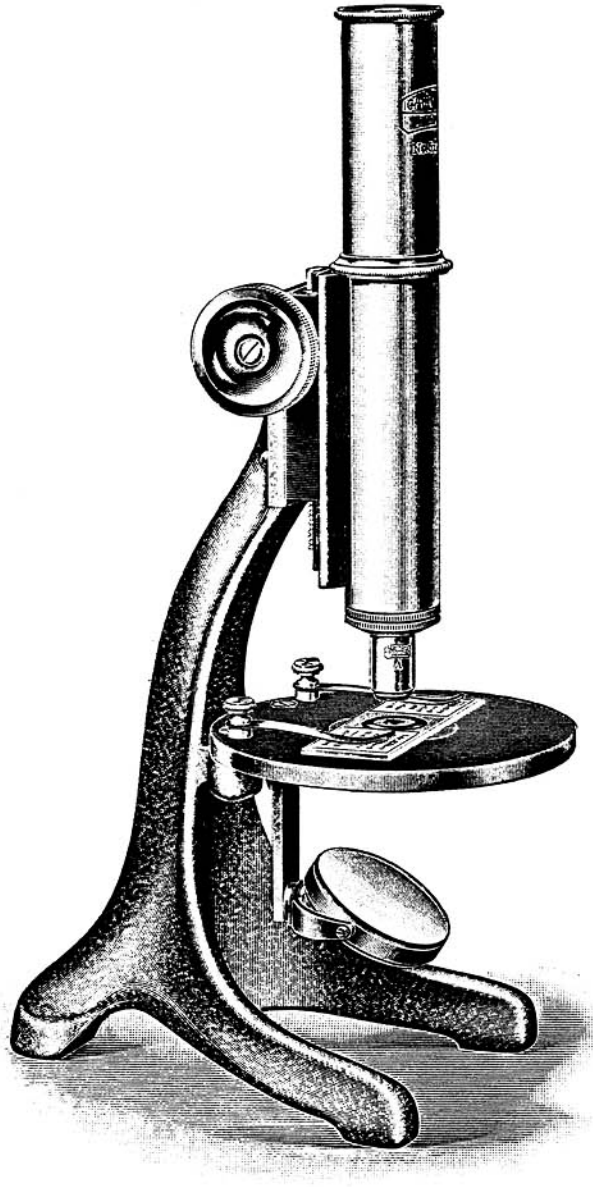

540

Fig. 31.
Stand IX with Objective and Eyepiece.
(½ Full Size.)

Stand **IX** is eminently suitable **for examining under low magnifications opaque objects, minerals, metallographic specimens** and such like and can be used in conjunction with the Vertical Illuminator (pp. 37 and 38). It is also well adapted for use as a reading microscope in conjunction with an eyepiece micrometer when one objective only is used and the micrometer scale is required to furnish invariable and more or less integral values, in which case the tube-length should be adapted accordingly.

The stand may be fitted with a revolving nosepiece, the tube being, if necessary shortened, by the requisite amount.

4) Hand Microscope.

We have designed a **Hand Microscope** (Fig. 32) suitable for class demonstration. The stage *c*, fitted with clips for holding the object slide, is attached to a sleeve within which slides the optical tube. The instrument is focussed by the displacement of the tube within the sleeve *a* and, after adjustment, can be secured in position by a clamping ring *b*. A fine adjustment can be obtained, if required, by displacing the eyepiece, which moves within the tube with a sliding fit. For use, the instrument is held in the hand towards a window or lamp.

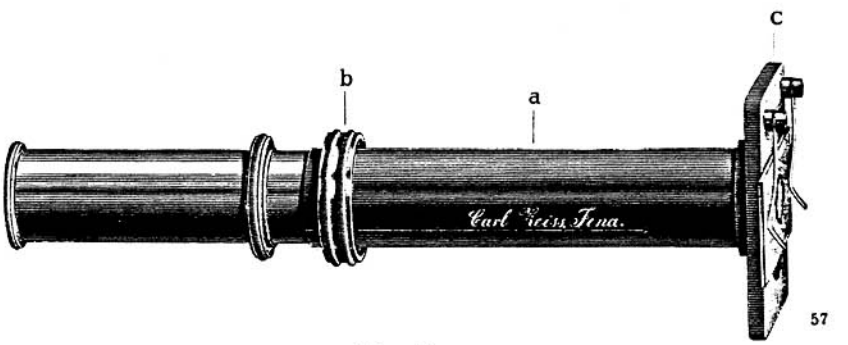

Fig. 32.
Hand Microscope.
(½ Full Size.)

No.		Marks	Codeword
12.4600	**Hand Microscope** (with objective or eyepiece), in case	**15.—**	*Micabant*

5) Erecting Microscopes fitted with PORRO Prisms.

a) Binocular Microscopes.

In 1897 we introduced a new form of **binocular** microscope in which **stereoscopic vision,** instead of being obtained by the bifurcation of a pencil of light transmitted through a single objective, results from the **combination of two independent microscopes fitted with erecting prisms.** This double microscope tube is focussed by means of a rack and pinion motion.

The erection of the image is effected by **PORRO Prisms,** the arrangement of which affords a convenient means of adjusting the position of the eyepieces to the distance between te eyes.

The drums containing the PORRO Prisms can be rotated through a sufficiently wide range to adapt the position of the eyepieces, with the exception of Eyepiece No. I, to any distance between the eyes within the normal limits of **2¼ to 3 inches. In cases where the eyes are abnormally far apart or close together this fact should be stated in the order. Also, in the event of a pair of Eyepieces No. 1 being included in the equipment the smallest required distance between the eyepieces should be stated.**

The Paired Objectives are mounted upon mutually interchangeable Metal Slides. They require to be individually adjusted for each stand. When ordering additional pairs of objectives for use with an existing microscope the tube should be sent to us for their adaptation.[1])

We provide a choice of Five Pairs of objectives for use with these microscopes, as listed on page 23, viz. (55), (a_0), (a_2), (a_3), (Pl).

The **magnifications** obtainable with these objectives and the eyepieces provided for use with them range **from 8 to 200 diameters,** as will be seen from the table on page 26, which likewise furnishes information respecting the free working distances and the diameter of the object seen in the field.

It should be noted that the (Pl) Pair of Objectives is available for use as a water immersion combination only (see page 21).

The Prices of the stands **do not include** eyepieces and objectives. Complete Sets will be found specified on pp. 122 et seq.

When the eyes of the observer differ very markedly the resulting indistinctness in one of the fused images should be rectified by slipping spectacle glasses upon the eyepieces.

---

[1]) Where the circumstances render this impracticable it should be noted in the order, and by way of a compromise a pair of objectives which has been accurately centred with respect to the existing microscope should be provided to enable us to make the necessary adjustment. Failing this, we cannot ensure a good central adjustment.

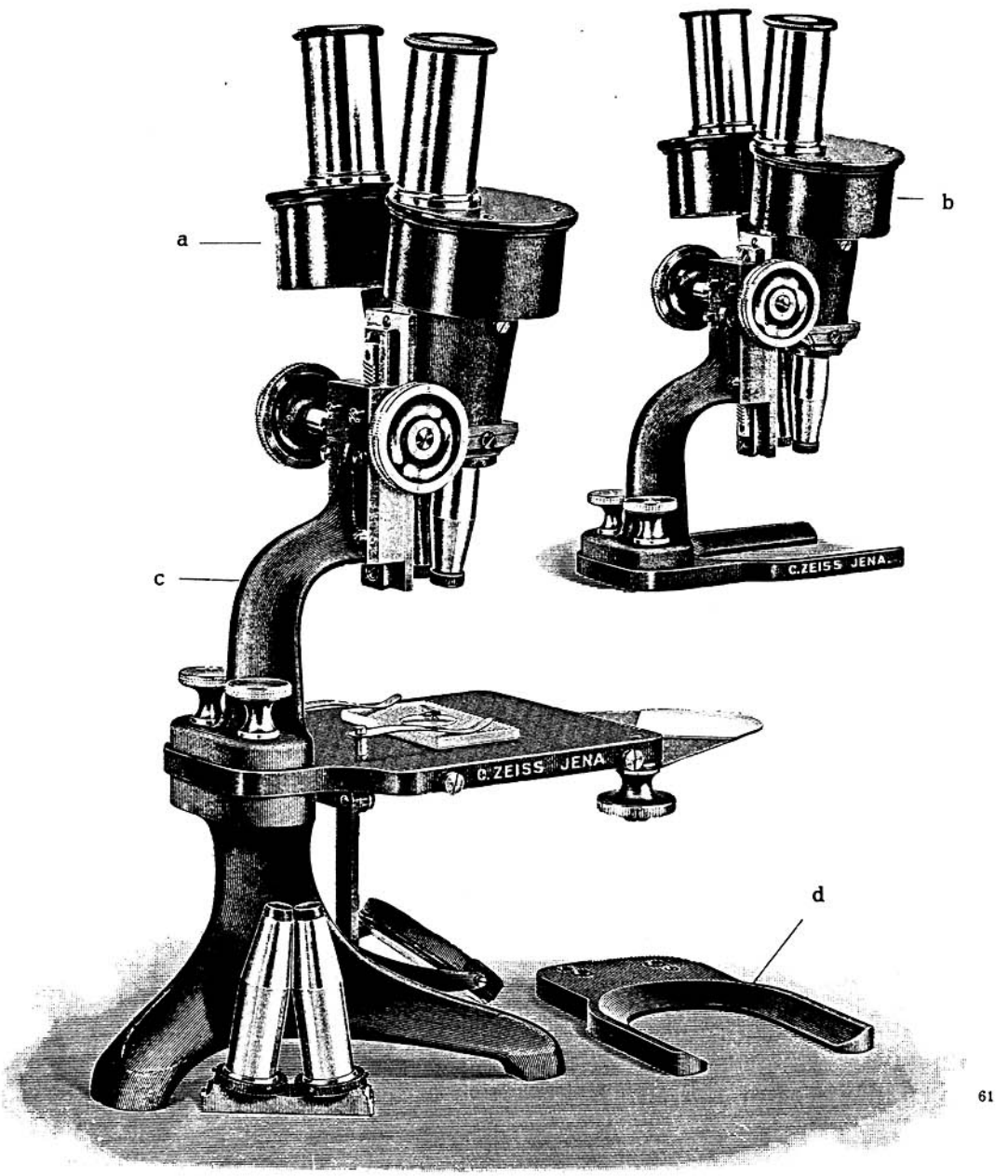

61

Fig. 33.

a: **Stand XA (½ Full Size);**

b: **Dermatoscope, being the body of Stand XA attached to a Vulcanite U Foot (½ Full Size);**

Both instruments fitted with Objectives and Eyepieces.

Stand XA.

The Body of the Binocular Tube is detachable, as shown in Fig. 33, page 69. The square stage measures 100 × 100 mm and has an opening 33 mm in diameter, which can be reduced to 20 mm by the insertion of a stage stop. Below the stage the stand is fitted with a movable mirror. The stand is alike available for use with incident and transmitted light. Hand Rests are supplied as part of the equipment of the microscope for attachment to the sides of the stage, which adds to the convenience of the instrument when used as a dissecting and mounting microscope.

The detachable body can be mounted upon a **U Foot** *(d)* **of Vulcanite** by means of the two thumb screws at the back. This foot is supplied with the Microscope XA, unless expressly excluded from the order. In this form, as shown in Fig. 33b, the instrument can be placed upon any object of whatever shape and furnishes thus a very useful **Dermatoscope** serving for the **examination of the skin** in incident light. When applied in this way the instrument should be steadied with one hand by the tube bearer. The U Foot may be made of metal, if preferred.

Stand XA is supplied in a finely polished mahogany case.

Instead of the S-shaped tube bearer *c* shown in Fig. 33 a **Straight Upright Pillar** No. **12.4930** may be attached to the stage and the binocular tube replaced by a Stereoscopic Camera (page 73) adapted for use with the paired objectives. The binocular tube of Stand XB (Figs. 34 and 35) may likewise be attached to this upright and so used in conjunction with the stage and foot of Stand XA. The upright has two openings for the attachment of the camera or the tube. The pivot of the Stereoscopic Camera fits into the upper hole. That of the binocular tube is generally inserted into the lower hole, excepting where the object is unusually thick, when it should be pushed into the top hole.

Stand XA may also be provided with a hinge for inclining it. Particulars on application.

For **Observation by Incident Light** it is as a rule sufficient to use daylight or lamplight. If necessary, the illumination can be improved by concentrating the light on the object with the aid of a bull's eye condenser (page 110). When the illumination so obtained does not suffice the stand may be equipped with the **Illuminating Attachment** No. **12.4960** (page 73).

No.		Marks	Codeword
12.4905	**Vulcanite U Foot** for the Dermatoscope . . .	**6.—**	*Micabo*
12.4906	**Metal U Foot**	**6.—**	*Micabunt*
12.4930	**Straight Upright Pillar** for the attachment of the Stereoscopic Camera or the Binocular Tube of Stand XB to the stage of Stand XA	**10.—**	*Micabis*
12.5000	**Dermatoscope,** being the body of Stand XA with Vulcanite U Foot, in case	**133.—**	*Micabitis*
12.5040	**Stand XA** with arm Rests and Vulcanite U Foot (without objectives and eyepieces), in cabinet .	**195.—**	*Micabasalt*

Stand XB.

Stand XB is primarily intended for examining, dissecting and mounting objects which are too large to be accommodated on the stage of Stand XA. In addition, it is available for use as an **Aquarium Microscope,** for the examination of large vegetable objects, rocks, etc., in fact, for viewing any portion of a large object without disturbing its integrity. The binocular tube is supplied with a separate slide with standard screw, which covers up one opening of the binocular tube and renders the instrument available for use as a monocular microscope with high power lenses. See Z.-S. f. wiss. Mikr. **14,** 5—10, 1897.

Stand XB is supplied in two patterns, the arrangement of the binocular tube being the same in either.

Stand XB No. 12.5070. The stand is mounted on a heavy rectangular foot (Fig. 34). It is furnished with three rack and pinion movements and can be rotated about four axes. When appropriately used, these mechanical fittings enable the

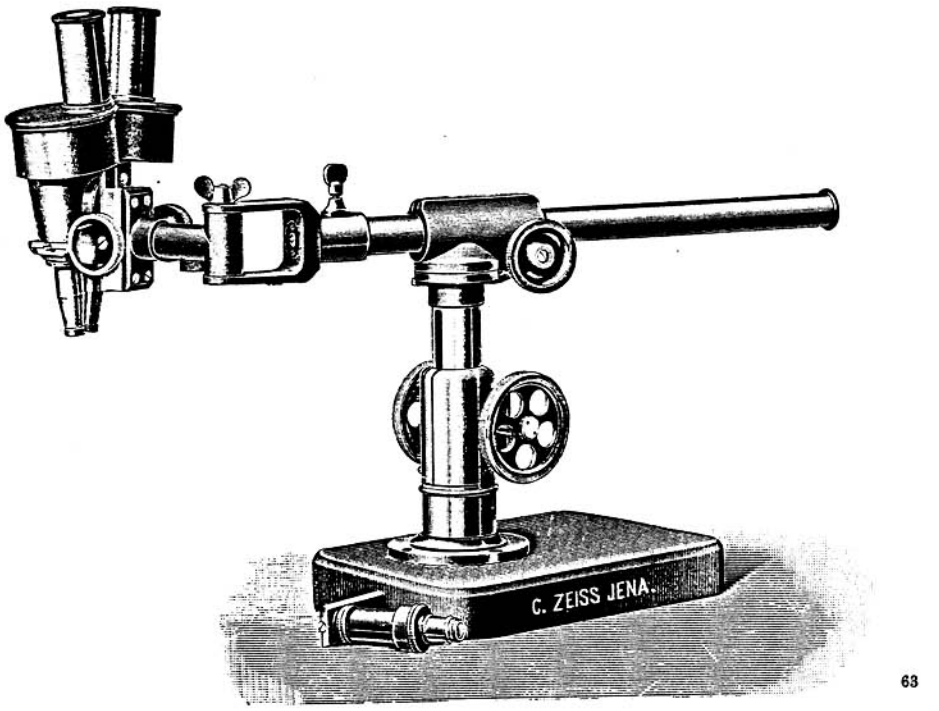

Fig. 34.
Stand XB No. 12.5070 and Slide with Objective for Monocular Observation.
(¼ Full Size.)

No.		Marks	Codeword
12.5070	**Stand XB,** without Objectives and eyepieces, in alderwood case	**260.—**	*Micace*

observer to survey quite irregularly shaped objects. The tube cannot, however, be lowered so far as to admit of focussing the objectives with respect to the surface of the table or the plane of the base of the foot. To do so it is necessary to use the Intermediate Adapter No. **12.4911.** The stand is supplied in an alderwood case.

Stand XB No. 12.5090. The stand, as shown in Fig. 35, consists of a stout upright surmounting a foot with two long toes set at right angles to one another. The upright carries in a clamping socket an arm about 30 cm long, which can be raised and lowered and moved aside. The binocular microscope attachment is the same as that provided with Stand XB No. 12.5070. The coarse adjustments in height and in transverse directions are, however, in this case made by displacing the socket and horizontal tube by hand. The final focussing during observation is applied with the aid of the rack and pinion motion fitted to the binocular attachment. The upright is fitted with a clamping collar. This

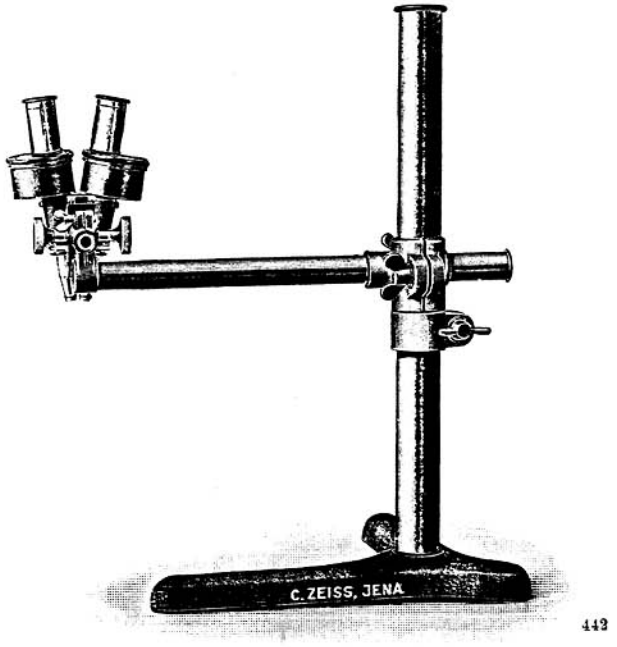

Fig. 35.
Simplified Stand XB No. 12.5090 with Paired Objectives and Eyepieces.
(about ¼ Full Size.)

No.		Marks	Codeword
12.4911	**Intermediate Adapter** for use with No. **12.5070** (page 71) for focussing down to the plane of the base	**15.—**	*Micaceo*
12.5090	**Simplified Stand XB** with alderwood case for the binocular tube attachment (without objectives and eyepieces)	**160.—**	*Micacique*

serves as a stop for the socket of the horizontal arm to turn upon, so that it can be made to freely swing about the upright without descending. The radial extension in this arrangement of Stand XB exceeds that obtainable with Stand XB No. **12.5070.** The binocular tube is fitted in an alderwood case, the stand being supplied without a container. The slide with the standard screw referred to on page 71 is not included in this outfit.

In either pattern of the XB Stand the binocular attachment is interchangeable with a **Stereoscopic Camera** (DRÜNER, Über Mikrostereoskopie und eine neue vergrößernde Stereoskopkamera, Z.-S. f. wiss. Mikr. **17,** 281—293, 1900, see also our Catalogue relating to Photo-micrographic Apparatus, 7th Edition, 1912, Booklet Mikro 264, pp. 42 and 43).

Dissecting Stage No. **12.4918.** In the event of Stand XB of either pattern being required for observation or preparation in transmitted light this may be conveniently accomplished with the aid of the Dissecting Stage No. **12.4918.**

Illuminating Attachment No. **12.4960.** Stands XB are primarily intended for observation by incident light. As a rule daylight or lamplight is sufficient for this purpose. To meet the requirements of those cases, however, where the area under observation needs a rather intense illumination the binocular tube can be fitted with a lighting tube containing a glowlamp and two condenser lenses, by means of which a uniform light can be cast upon the object. This lighting tube can also be appended to Stand XA. The lamps require generally a current of about 7½ volts. They may therefore be fed with the current supplied by four 2-volt accumulator cells or by the electric light system, a suitable resistance being interposed in the latter case. The use of a regulating resistance has the advantage that the intensity of the illumination may thereby be varied. Three spare lamps are supplied with the attachment.

The resistance coils should not be cut out beyond the limit gauge, otherwise the lamp will burn up prematurely.

When the Illuminating Attachment is required for a microscope supplied on a previous occasion the body of Microscope XA or the binocular tube attachment of Stand XB together with a pair of objectives should be sent for its adaptation.

The object may also be illuminated with the aid of lamps of the GREIL pattern (Booklet Mikro 264, pp. 36 and 39).

Respecting the use of the Binocular Tubes with P. MAYER's **Large Dissecting Stand** see Booklet Mikro 270.

No.		Marks	Codeword
12.4918	**Dissecting Stage** for Stand XB	**40.—**	*Micaceous*
12.4960	**Illuminating Attachment** for Binocular Microscopes, with three spare lamps	**36.—**	*Micaiah*
	Resistances, including 2 m of flexible cord and contact plug,		
12.4961	for a 110-volt supply current	**16.50**	*Micalete*
12.4962	„ a 220- „ „ „	**23.—**	*Micamini*
12.4965	**Spare Lamps,** 7½ volts, each	**1.50**	*Micamus*

b) Monocular Erecting Prism Microscopes.

Stand XI.

Stand **XI** (Fig. 36) has been primarily designed for use with Objective **a*** with its exceptionally large field and variable range of magnifications. To secure the full benefit of all the resources of this objective the stand is so designed that it admits of the objective being racked a long distance from the object stage.

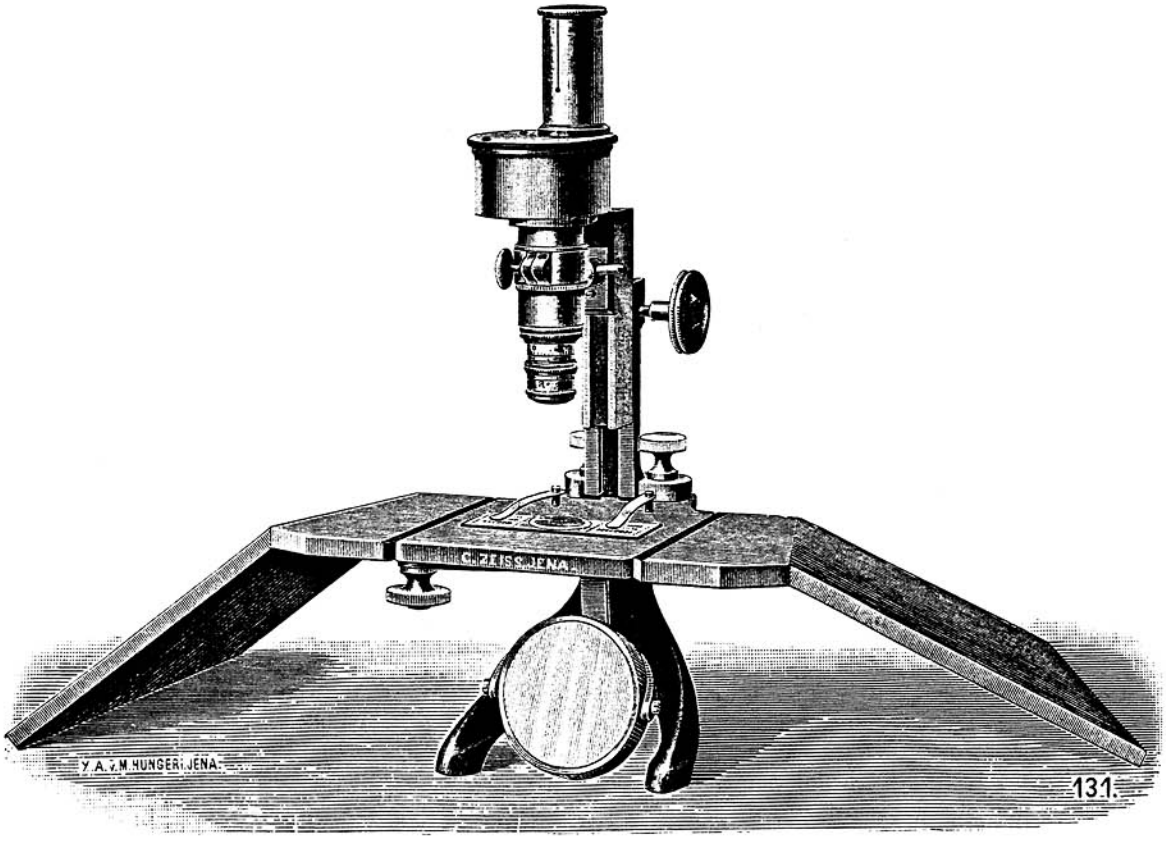

Fig. 36.
Monocular Erecting Prism Microscope with Objective a* and Eyepiece No. 2.
(⅓ Full Size.)

No.		Marks	Codeword
12.5310	**Stand XI,** Erecting Prism Microscope, with alderwood case, without objectives or eyepieces . .	**140.—**	*Micandi*

Moreover, the stage opening and the mirror are exceptionally large. The stage measures 10 × 10 cm and has an opening 4 cm in diameter which can be reduced to 2 cm by the insertion of a stop. The plane and concave mirror has a diameter of 7 cm and is movable in all directions. In other respects the lower portion of the stand is similar to Stand XA.

The arm which carries the tube can be moved up and down in two alternative ways, viz, either in the ordinary manner by rack and pinion or by the displacement of the tube carriage within a dovetailed bearing, wherein it can be clamped by a tommy screw.

The tube is fitted with an erecting PORRO Prism. The lower end of the tube carries the standard screw thread. The mechanical tube length, allowing for the presence of a thick stratum of glass, is 145 mm, so that the attachment of a revolving nosepiece establishes the normal tube-length. To render the stand available for use without a nosepiece a collar of a depth of 15 mm is supplied with it. The use of the nosepiece is, however, to be recommended since it provides a convenient means for rapidly passing from dissection under a low power to observation under a high magnification. The intermediate collar should, of course, be removed whenever the nosepiece is to be attached.

A detailed description of the construction of the instrument is to be found in an article by P. CULMANN, Monokulares bildaufrichtendes Prismenmikroskop, Z.-S. f. wiss. Mikr. **20**, 416—420, 1903.

Stand **XI** is adapted for use with objectives of low and medium power up to Objective **D**, with the exception of Objective a_0, in the place of which we supply for use with this stand an Objective of 55 mm focus (No. **11.2000**) with a very long working distance.

Our Drawing Cameras (p. 78) can be attached to Stand **XI** as to any of our other monocular stands.

The upper portion of the stand can be used in conjunction with P. MAYER's Large Dissecting Microscope, as described in our booklet Mikro 270, the arm carrying the tube being in this case replaced by a longer arm.

No.		Marks	Codeword
11.2000	**Microscope Objective of 55 mm focus,** for use with Stand **XI**	**15.—**	*Micando*

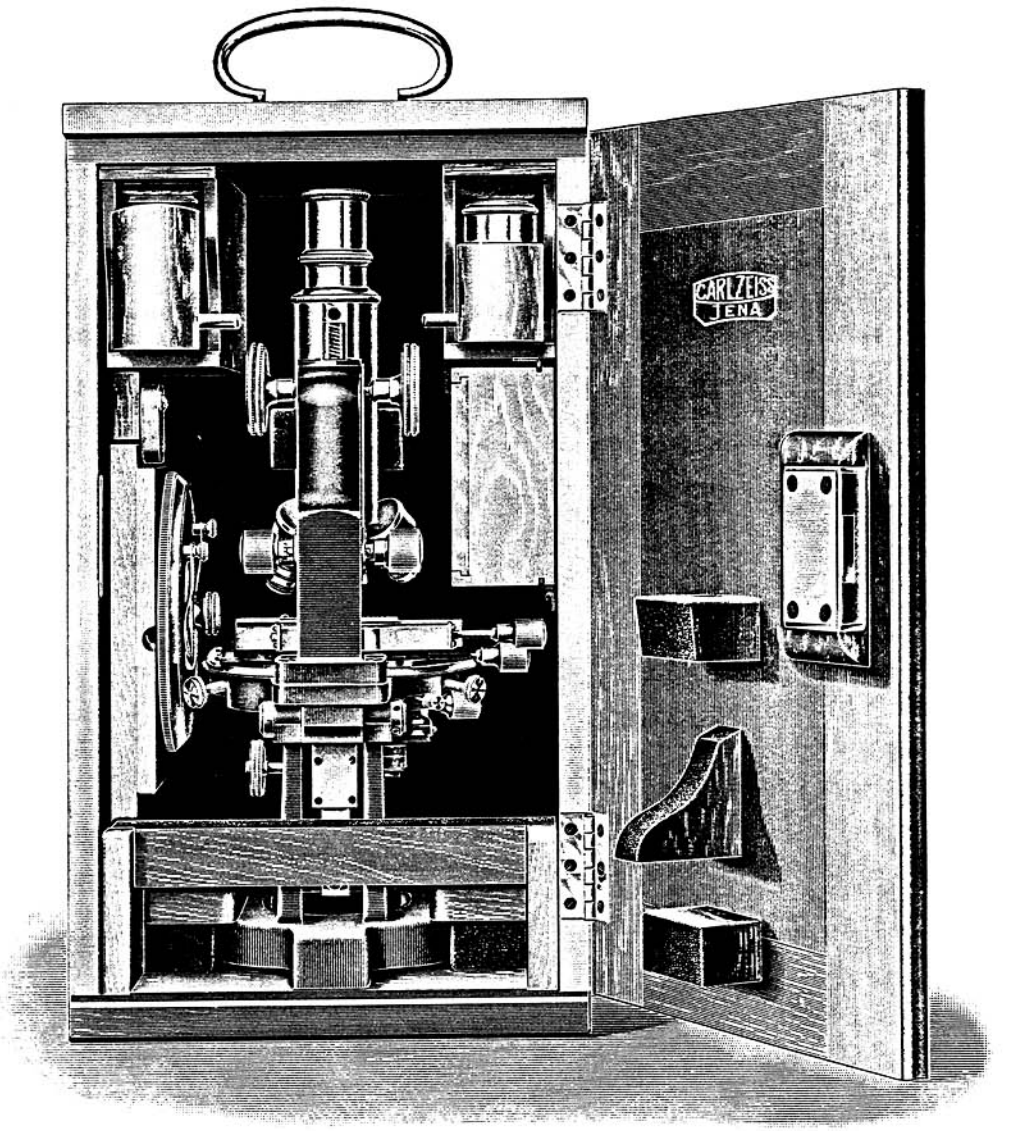

404

Fig. 37.

Stand IIIE with Nosepiece and Objectives attached, accommodated in its Cabinet, the Vulcanite Stage No. 12.0670 being attached to the side of the case.
(Fig. ⅓ Full Size.)

Microscope Cabinets and Cases.

The Cabinets and Cases provided for safely keeping the stands and for transporting them from one place to another are dimensioned with a view to compactness; nevertheless, with the exception of the case of Stand **VI**, sufficient room is furnished for the accommodation of the entire instrument with its objectives, nosepiece, and eyepiece in position as well as an adequate number of additional objectives and eyepieces and a few accessories (Fig. 37).

The price of the cabinet or case is included in that of the stand, unless otherwise stated.

Leather Travelling Cases for the protection of the mahogany cases are made by us in three regular sizes.

If desired, the **owner's name** may be engraved on the stand at a charge of M. 3.— (Codeword: *Micante*).

For attachment to the Cases we supply Nickel-plated **Name Plates engraved with the Owner's Name.** Price: M. 5.— Codeword: *Micantem.*

	Marks	Codeword
Leather Travelling Case for Stands I, III, IV . . .	36.—	*Micandum*
„ „ „ „ Stand V	32.—	*Micanrel*
„ „ „ „ Stand VI	28.—	*Micans*

III. Accessory Apparatus for Use with the Microscope.

A. Drawing Appliances.

In the drawing cameras here described the drawing surface is seen by two successive reflections, whilst the pencil of light which emerges from the microscope or magnifier reaches the eye without undergoing a deflection from its direct path. The movements of the drawing pencil are accordingly seen without mirror reversals.

In addition to the old form of **Camera Lucida** introduced by us in 1869, the **Drawing Prism** No. **12.6000** illustrated in Fig. 38, we supply improved forms of the **ABBE Drawing Camera,** which was devised by ABBE some twenty years ago. These cameras are made in three different forms for use with the microscope in its upright or inclined position. A fourth pattern has recently been introduced for use with horizontal observation instruments. A special pattern has been devised for attachment to MAYER's Dissecting Microscope, in which the reflecting planes are set at an angle which differs from that usually adopted. Details respecting this camera may be found in our booklet Mikro 270.

Whereas in the Drawing Prism, as indeed in most drawing instruments, only a portion of the exit pupil can be turned to account, the full area of the transmitted pencil is effective in the cameras of the ABBE type. Hence **no loss of light occurs** in the microscopic image, even **when the highest powers are used,** and at the same time the drawing surface and the drawing pencil can be clearly seen. This is accomplished by the use of the so-called **ABBE cube,** which consists of two right-angled glass prisms with similar sides cemented together at their hypotenuse faces, the cube being situated with its centre near the eyepoint of the eyepiece or magnifier. The upper prism is silvered at the cemented face save a small central opening of 1 mm or 2 mm, as the case may be.

The relative Illumination of the Drawing Surface and the Microscopic Image can be modified in all our drawing appliances **by the interposition of Smoked Glasses.** In the case of the Drawing Prism No. **12.6000** and the Drawing Camera No. **12.6010** one or two moderating glasses may be slid into a small frame attached to the prism mount, whilst the brightness of the image should be moderated either by stopping down the illuminating pencil or by using tinted glasses with the illuminating apparatus.

In the case of the Drawing Cameras No. **12.6011** and No. **12.6012** the illumination is regulated by means of a revolving cap fitted at the sides with a

graded sequence of five moderating glasses and an eccentrically pivoted revolving disc fitted likewise with a sequence of five moderating glasses. The revolving cap serves to regulate the brightness of the drawing surface, whilst the disc controls that of the microscopic image. In the cap as well as the disc there is a sixth hole, which is left empty to allow of these fittings remaining attached to the apparatus when no moderating effect is required in either one or the other.

The Drawing Cameras No. **12.6011** and No. **12.6012** are provided with two cubes having apertures of 1 mm and 2 mm respectively, which can be readily interchanged after the detachment of the moderating cap. The larger aperture is preferable when drawing with very low magnifications in view of the larger exit pupil which then obtains.

For a Detailed Description see our booklet Mikro 118.

Observers with an abnormal sight may have their drawing apparatus fitted with a suitable spectacle lens.

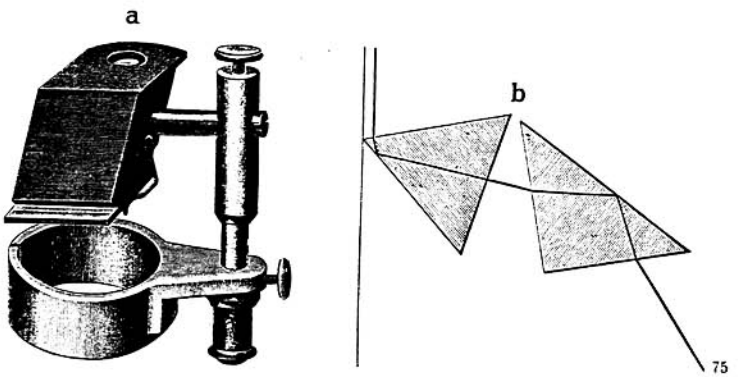

Fig. 38.
a: Drawing Prism (Camera lucida) No. **12.6000.**
($\frac{3}{4}$ Full Size.)
b: Diagram showing the trace of the rays.
(Scale 2:1.)

No. **12.6000. Drawing Prism (Camera lucida).** This drawing prism is supplied in the form shown in Fig. 38. The prism casing turns about a horizontal pin and can be raised and lowered. It attaches to the microscope tube by a sprung collar and can be swung aside about a vertical post. When the prism is in its working position the top edge of the upper prism, as seen through the sighting hole in the mount, should pass accurately through the centre of the exit pupil. The surface upon which the drawing paper rests should be inclined at an angle of 25^0 to the axis of the microscope. We supply for this purpose the Drawing Board No. 12.6060 (page 83).

No.		Marks	Codeword
12.6000	**Drawing Prism** (Camera lucida), in case . . .	**21.—**	*Micantes*

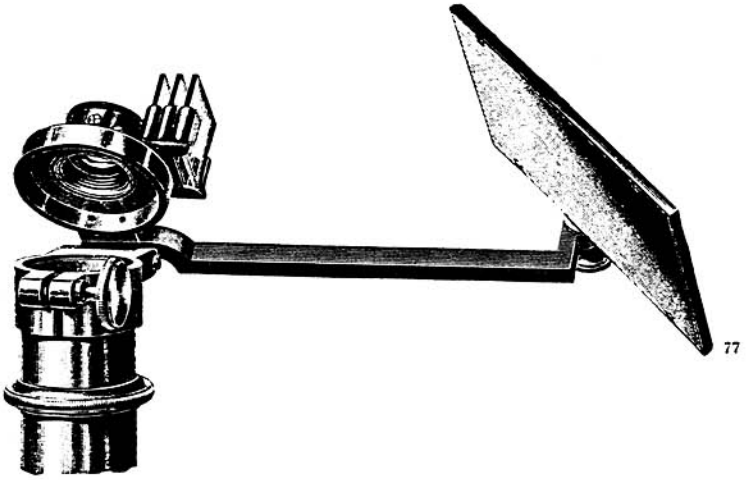

Fig. 39.
Small ABBE Drawing Camera 12.6010.
(⅔ Full Size.)

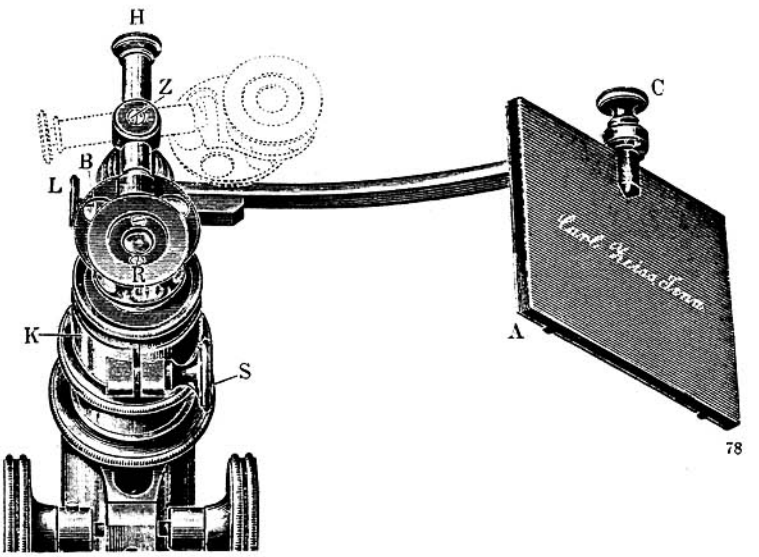

Fig. 40.
ABBE Drawing Apparatus No. 12.6011.
(⅔ Full Size.)

CARL ZEISS JENA

No. **12.6010. Small ABBE Drawing Camera.** The prism casing, together with a mirror arm 105 mm long, is hinged to the collar by which the apparatus is attached to the microscope tube (Fig. 39). The mirror measures 75 × 50 mm. The clamping collar should be attached to the microscope tube before inserting the eyepiece. The upper portion, i. e. the casing and mirror, being hinged, can be folded back. This arrangement enables the draftsman during the operation of drawing to control his work by viewing the object direct without the intervention of the prism. When the hinged portion is swung back the cube resumes its exact position.

In this form the apparatus is not available for use with micrometer eyepieces (in which the eyepiece is focussed with respect to the plane of the diaphragm, p. 85). Where it is required to use an eyepiece micrometer of this kind this should be stated in the order. We supply in this case a slightly modified pattern in which the casing containing the ABBE cube only is hinged, whereas the mirror remains stationary.

No. **12.6011. ABBE Drawing Camera.** In this pattern, after the removal of the eyepiece, the clamping collar of the drawing apparatus should be slipped over the tube and secured thereto by tightening the screw *s* (Fig. 40). By suitably raising or lowering the clamping collar the unsilvered aperture in the prism may be easily rendered coincident with the exit pupil of the microscope, and it can be accurately centred by means of the screws *L* and *H*.

The size of the mirror and the length of its arm are the same as in the preceding drawing camera. The casing with the prism and the moderating glasses can be swung aside about the pin *Z* into the position indicated by the dotted lines in Fig. 40.

No. **12.6012. *Large ABBE Drawing Apparatus.** This pattern has been designed **for drawing with optical combinations furnishing a very large field of view.** It resembles Camera No. **12.6011.** The mirror measures 125 × 80 mm and its arm is 125 mm long.

No. **12.6025. *Drawing Apparatus for use with Horizontal Instruments of Observation.** In this pattern the ABBE cube is combined with a reversing prism and attached to a horizontal arm which by a sliding cross coupling can be displaced along an upright mounted upon a round foot, the arrangement being similar to that shown in Fig. 42, page 83. The drawing surface is horizontal as in the other instruments.

To draw upon a horizontal surface with the microscope tube in its horizontal position the mirror should be detached from the ABBE drawing camera and a reversing prism used in its place so that the movements of the drawing pencil may be seen without mirror effects. A reversing prism of this kind may be fitted to the Cameras No. **12.6011** and No. **12.6012** by a folding hinge.

No.		Marks	Codeword
12.6010	**Small ABBE Drawing Camera,** in case . . .	**30.—**	*Micaslate*
12.6011	**ABBE Drawing Camera,** in case	**60.—**	*Micatibus*
12.6012	**Large ABBE Drawing Apparatus** in case . .	**72.—**	*Micatio*
12.6025	**Drawing Apparatus for use with Horizontal Instruments of Observation**	**68.—**	*Mication*

Drawing Stages and Accessories.

When the mirror of the ABBE drawing apparatus is inclined at an angle of 45° with respect to the axis of the microscope it is not possible to see the entire field of view on the drawing paper. To do so one inclines the mirror a little further. To obtain pictures which are free from distortion it becomes then necessary to provide a suitably inclined drawing surface. We supply for this purpose adjustable drawing stages and drawing desks of various patterns.

The ***Drawing Stages devised by BERNHARD** (Z.-S. f. wiss. Mikr. **9,** 439—445, 1892 and **11,** 298—301, 1894, and our booklet Mikro 118), of which we make two patterns, has provisions for raising and lowering the drawing surface with respect to the table and also for inclining it.

The drawing surface can be raised to a height of 17 cm and inclined at any angle ranging from 0 to about 35°. The microscope clamps to the base of the stage. An arm rest is attached to the drawing board to steady the draftsman's hand.

BERNHARD's Drawing Stage is supplied either with a **hinged platform for**

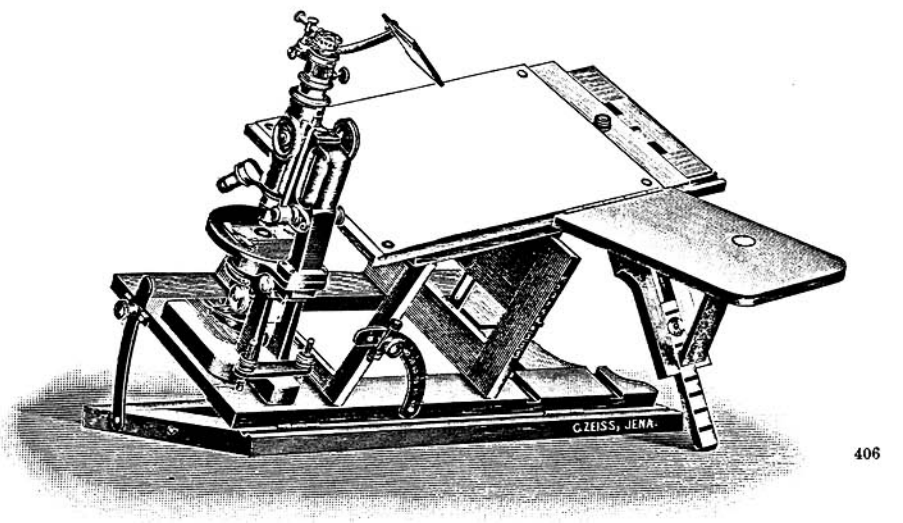

406

Fig. 41.

BERNHARD's Drawing Stage No. 12.6050 with Microcope and Drawing Apparatus attached.
(⅛ Full Size.)

No.		Marks	Codeword
12.6050	**BERNHARD's Drawing Stage** with base for tilting the microscope and the drawing board . .	**52.—**	*Micatione*
12.6055	**BERNHARD's Drawing Stage,** for use with the microscope in the upright position only .	**45.—**	*Micationem*

tilting the microscope bodily as well as the drawing board, No. **12.6050** (Fig. 41), and for use with the **microscope in the upright position** only, No. **12.6055.**

No. **12.6060.** In addition to the above we supply a simple **Drawing Desk of Limewood** (Fig. 42), which is permanently inclined at an angle of 25° with respect to the drawing surface. This is more particularly intended for use with the Drawing Prism No. **12.6000.**

No. **12.6090.** ***GILTSCH's Drawing Stand.** The stand consists of an upright graduated into centimetres surmounting a heavy foot and a horizontal arm attached thereto by a cross socket (Fig. 42) and in conjunction with either the Drawing Prism No. **12.6000** or the Drawing Apparatus No. **12.6011** serves for sketching objects in their natural size. For the attachment of these instruments the horizontal arm is fitted at one end with a pivoted socket. The stand serves also for drawing with the aid of the aplanatic lens of 6 diameters and 10 diameters respectively (Mikro 188) or spectacle lenses, an intermediate adapter being required for the attachment of the aplanatic lens of 10 diameters and spectacle lenses.

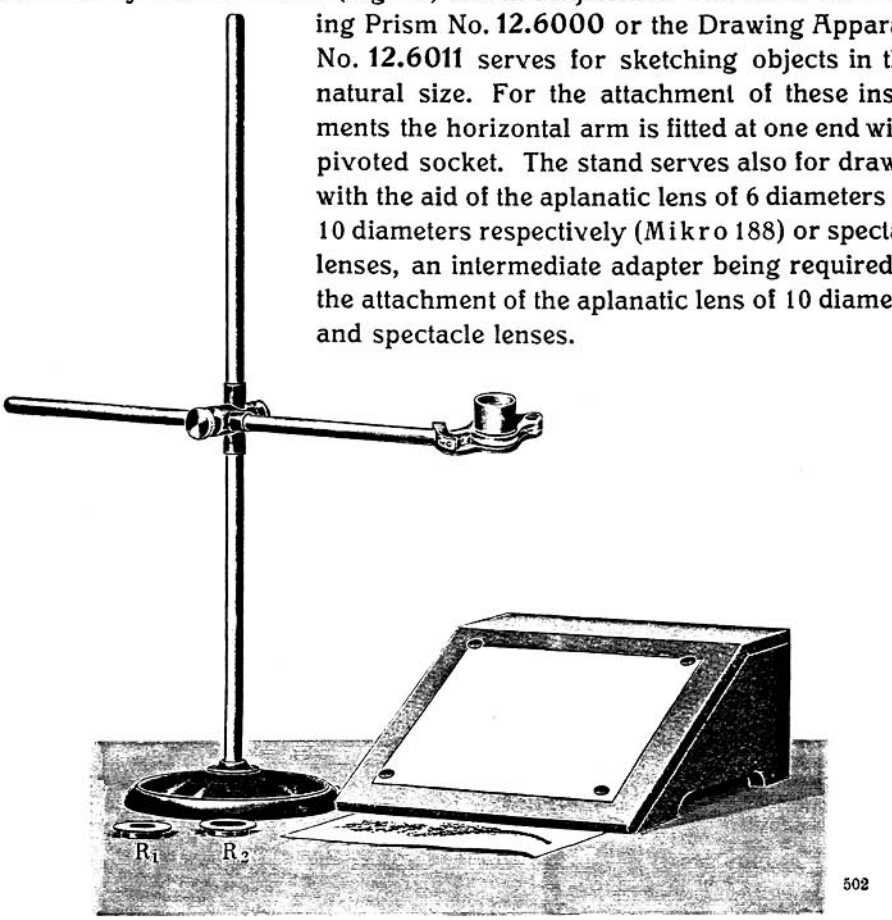

Fig. 42.
GILTSCH's Drawing Stand No. 12.6090 and Drawing Desk No. 12.6060.

No.			Marks	Codeword
12.6060	**Simple Drawing Board**		**2.50**	*Micationis*
12.6090	**GILTSCH's Drawing Desk,** without intermediate adapter		**30.—**	*Micationum*
12.6091	**Ring Adapter** for the 10×Aplanatic Lens	for use with No. 12.6090	**1.—**	*Micatis*
12.6092	„ „ „ Spectacle Lenses . .	for use with No. 12.6090	**1.—**	*Micator*

B. Measuring and Counting Devices.

Measuring Devices.

Eyepiece Micrometers.

For measuring objects under the microscope it is generally sufficient to employ simple Eyepiece Micrometers, i. e. **thin glass plates with fine divisions ruled upon them,** which should be placed upon the eyepiece diaphragm with the ruled face downwards. **The reading of each interval of the scale in terms of the actual dimensions of the object should be calibrated for each objective and eyepiece combination by comparison with a good stage micrometer (page 87).**

We supply two forms of Eyepiece Micrometers, viz. **Plain Line Micrometers** and **Contrast Micrometers** (Z.-S. f. wiss. Mikr. **24,** 366—369, 1907).

The **Plain Line Micrometers** have a series of fine parallel lines ruled upon them, as follows:

No. **11.5100.** A scale of **5 mm** divided into tenths of a millimetre,
No. **11.5101.** A scale of **5 mm** divided into twentieths of a millimetre,
No. **11.5102.** A scale of **10 mm** divided into tenths of a millimetre.

The **Contrast Micrometers** are photographed scales consisting of squares lying with one of their diagonals along a straight line. The projecting corners of the squares and the diagonals joining them in each square determine the intervals of the scale, whilst the tangent corners bisect these intervals. We supply Contrast Micrometers with fine and coarse divisional squares. The squares may be black or red.

No. **11.5130.** Scale of **5 mm** divided by 50 squares into 0.1 and 0.05 mm.
No. **11.5140.** Scale of **10 mm** divided by 25 squares into 0.4 and 0.2 mm.

The Eyepiece Micrometers have diameters of 21 and 19 mm respectively, the former being adapted for ordinary eyepieces, the latter for adjustable micrometer eyepieces, as described below.

No.		Marks	Codeword
11.5100	**Eyepiece Micrometer:** 5 mm divided into 50 parts, in capsule	**5.—**	*Micatote*
11.5101	**Eyepiece Micrometer:** 5 mm divided into 100 parts, in capsule	**7.50**	*Micatuum*
11.5102	**Eyepiece Micrometer:** 10 mm divided into 100 parts, in capsule	**7.50**	*Micatus*
11.5130	**Contrast Micrometer,** fine	**10.—**	*Micchetto*
11.5140	**Contrast Micrometer,** coarse	**10.—**	*Miccia*

When ordering Eyepiece Micrometers it should therefore be stated whether the micrometers are required for adjustable or for ordinary eyepieces.

With the Eyepiece Micrometers we provide Directions for Glass Micrometers, booklet *Mikro 273.* In addition, a Table *(Mikro 136)* is added which gives the approximate reading values of the intervals of the micrometer scale when used in conjunction with achromatic objectives and Huyghenian eyepieces. These values would be sufficiently accurate if it were possible to maintain the optical tube-length constant in all cases. As a matter of fact, this is subject to inevitable small discrepancies arising from small variations in the focal lengths of the objectives and eyepieces, and the optical tube-length changes also slightly when the mounts of the objectives are adjusted to nosepieces or sliding changers to ensure their central and focal agreement.

When Eyepiece Micrometers are used in conjunction with apochromatic objectives and the Compensating Eyepiece No. 6 each one tenth interval reads approximately as many μ's as there are millimetres in the focal length of the objective, a μ being the one-thousandth part of a millimetre, also called a micron or micromillimetre (Z.-S. f. wiss. Mikr. 5, 150—155, 1888). Each interval would read accordingly 16 μ with the 16-mm apochromatic objective, 8 μ with the 8-mm apochromatic objective, etc.; but, again, owing to slight variations of the optical tube-length occasioned by the causes referred to these readings are approximate only.

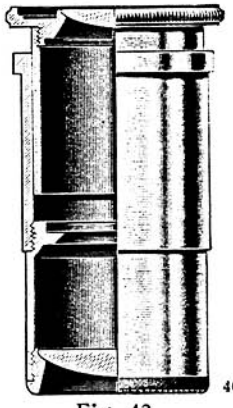
409

Fig. 43.
Focussing Eyepiece with Unscrewing Half.
(Full Size.)

To obtain exact micrometer readings the intervals of the micrometer should therefore be calibrated for any given set of objectives and eyepieces by comparison with a good Stage Micrometer (p. 87).

Micrometer Eyepieces. To provide a means of sharply focussing the micrometer scale with respect to different eyesights (for instance to enable an observer to measure with or without his spectacles on) we supply micrometer eyepieces in which the eyelens or the optical combination situated between the eyepiece diaphragm and the eye is adjustable with respect to the eyepiece stop. A **Focussing Eyepiece** of this kind fitted with a micrometer scale constitutes a **Micrometer Eyepiece.** As a rule, Huyghenian Eyepieces Nos. 2 and 3 (Nos. **11.5202** and **11.5203**) are fitted up in this way for use with the achromatic objectives and the Compensating Eyepiece No. 6 (No. **11.5406**) for use with the apochromatic objectives. The upper portion of the eyepiece mount unscrews for the more convenient insertion and removal of the micrometer scale (page 103).

No.		Marks	Codeword
11.5202	**Micrometer Eyepiece** No. **H. 2,** being a Focussing Huyghenian Eyepiece No. 2 with Micrometer No. **11.5100**	**16.—**	*Micciebant*
11.5203	**Micrometer Eyepiece** No. **H. 3,** being a Focussing Huyghenian Eyepiece No. 3 with Micrometer No. **11.5100**	**16.—**	*Miccientem*
11.5406	**Micrometer Eyepiece** No. **C. 6,** being a Focussing Compensating Eyepiece No. 6 with Micrometer No. **11.5100**	**30.—**	*Micciere*

These Micrometer Eyepieces may be fitted with a drum containing a fine screw for the lateral displacement of the micrometer scale, the instrument being then described as a **Drum Micrometer Eyepiece,** or with a movable index, when the instrument is known as a **Pointer Eyepiece** (page 102). The **Drum Micrometer Eyepieces** are exclusively adaptions of the Huyghenian Eyepieces Nos. 2 and 3 (Nos. **11.5502** and **11.5503**) and the Compensating Eyepiece No. 6 (No. **11.5506**).

Screw Micrometer Eyepiece. The Screw Micrometer Eyepiece furnishes a means of making very accurate measurements. It consists of a very carefully worked micrometer device with divided drum head and a RAMSDEN Eyepiece

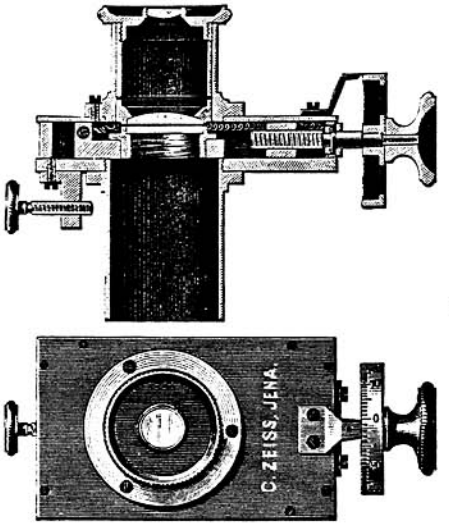

Fig. 44.
Screw Micrometer Eyepiece No. 11.5560.
Cross Section and Plan View.
($\frac{2}{3}$ Full Size.)

No.		Marks	Codeword
11.5502	**Drum Micrometer Eyepiece** No. **2,** being a Huyghenian Eyepiece No. 2 with Micrometer No. **11.5100,** in case	**40.—**	*Miccieria*
11.5503	**Drum Micrometer Eyepiece** No. **3,** being a Huyghenian Eyepiece No. 3 with Micrometer No. **11.5100,** in case	**40.—**	*Miccimus*
11.5506	**Drum Micrometer Eyepiece** No. **6,** being a Compensating Eyepiece No. 6 with Mircrometer No. **11.5100,** in case	**53.—**	*Miccingogo*
11.5560	**Screw Micrometer Eyepiece** with RAMSDEN Eyepiece for use with achromatic objectives, in case	**90.—**	*Miccinina*
11.5566	**Screw Micrometer Eyepiece** with Compensating Eyepiece No. 6 for apochromatic objectives, in case	**105.—**	*Miccinino*

(No. **11.5560**) of a focus of about 20 mm and magnifying accordingly about 12 times or the Compensating Eyepiece No. 6 (No. **11.5566**), as shown in Fig. 44. A thin glass plate upon which is ruled a cross and a double line is mounted on a slide immediately below a stationary micrometer scale and can be displaced by the micrometer screw. The cross furnishes an index which should be accurately set to coincide with the particles whose distance is to be measured, whilst the double line serves to count the entire revolutions of the screw with the aid of the scale which is seen in the field of view. The drum has fifty divisions. Each division of the drum corresponds to a displacement of the index through a distance of 0.01 mm, whilst a complete revolution is equivalent to a displacement of 0.5 mm. The index can be moved through a range of 4 mm across the image formed by the object.

The actual reading value of each interval of the drum head in terms of the linear dimensions of the object requires to be accurately calibrated for each objective with the aid of a stage micrometer.

Goniometer Eyepieces for Measuring the Angles of Microscopic Objects. The eyepieces which are adapted for goniometric measurements are the Huyghenian Eyepieces Nos. 2 and 3 (Nos. **11.5582** and **11.5583**) and the Compensating Eyepiece No. 4 (No. **11.5594**). The Goniometer Eyepieces are constructed on the pattern of the Micrometer Eyepieces. They are provided with a glass disc resting upon the diaphragm and having several parallel lines and a transverse line ruled upon it. At the top flange the eyepiece is fitted with a socket over the tube and three screws for its attachment thereto.

Where the divided circle of our Analyser No. II (No. **12.7832**, page 94) forms already part of the available microscope the goniometer eyepiece may be adapted to it, in which case it is supplied with an index but without a divided circle. The price of the Goniometer Eyepiece (including adaptation) reduces in this case to **M. 12.—. The existing divided circle should be sent to us for the adaptation of the eyepiece.**

Stage Micrometer.

Of **Stage Micrometers** we supply three regular patterns, viz:

No. **12.6300. One millimetre divided into one hundred parts.**

No. **12.6303. Three millimetres divided into tenths of a millimetre and again one tenth into hundredths of a millimetre.**

No. **12.6310. One centimetre divided into millimetres** and **one of these divided into tenths of a millmetre.**

No.		Marks	Codeword
11.5582	Goniometer Eyepiece H.2	35.—	*Miccino*
11.5583	„ „ H.3	35.—	*Miccion*
11.5584	„ „ C.4	48.—	*Micciremus*
12.6300	Stage Micrometer (1:100), in case	10.—	*Micciades*
12.6303	„ „ (3:10, 0.1:10), in case . .	8.50	*Miccianza*
12.6310	„ „ (10:10, 1:10), in case . . .	6.—	*Miccichino*

No. **12.6350. Stage Screw Micrometer** (Fig. 45). This is a form of stage micrometer which we have devised **for very exact measurements of objects** which are too extensive to be included in the field of view of the microscope. It consists of a slide and carriage with a revolving and graduated circular stage and a micrometer screw which actuates the sliding carriage.. Each complete turn of the micrometer screw imparts to the object a displacement of 0.2 mm, and,

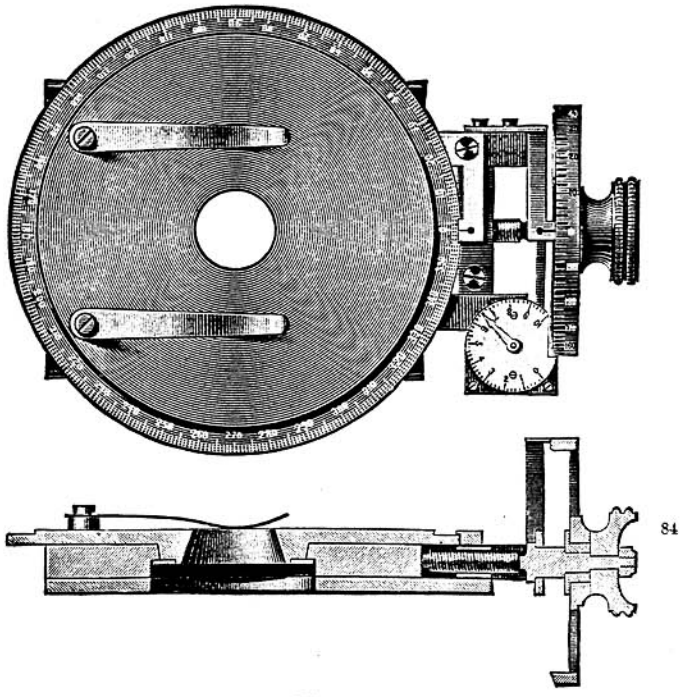

Fig. 45.
Object Stage Micrometer No. 12.6350.
Cross Section and Plan View.
(⅓ Full Size.)

since the circumference of the drum head has one hundred divisions, it follows that each division reads 0.002 mm. Complete turns of the drum head are counted by an indicator. **The range of measurement of the screw is 10 mm.**

The Screw Stage Micrometer is adapted for use with most of our stands. Its attachment to the microscope stage varies, however, very considerably according to the construction of the latter. When ordering, it will therefore be necessary to specify the stand and the stage with which it is proposed to use the instrument. When so supplied the instrument cannot be used indiscriminately on other microscope stands without re-adaptation. Also, the apparatus does not admit of the object being illuminated by means of the usual types of condensers.

No.		Marks	Codeword
12.6350	**Screw Stage Micrometer,** in case	**120.—**	*Micciverat*

Rules and Divided Circles.

Rules of German silver have bevelled edges. Rules and Completely Divided Circles of Plate Glass are figured in mirror type. The ruled face may thus be placed in immediate contact with the drawing or other object which is to be measured and read without parallax. These Rules and Circles are intended for measuring lengths and angles, but they are not adapted for plotting since the lines are not produced to the edge.

No.		Marks	Codeword
12.6400	**Rule of German Silver,** being 10 cm divided into millimetres	4.—	*Miccivisti*
	Plate Glass Rules with single divisions:		
12.6440	5 centimetres divided into half millimetres . .	3.—	*Miccotrogo*
12.6451	10 centimetres divided into millimetres	4.—	*Mice*
12.6452	20 „ „ „ „	8.—	*Micellar*
12.6453	30 „ „ „ „	12.—	*Micemus*
	Plate Glass Rules with Double Set of divisions (millimetres on one side, English inches on the other):		
12.6470	5 centimetres divided into half millimetres, 2 inches divided into 48 parts	4.50	*Micendum*
12.6481	10 centimetres divided into millimetres, 4 inches divided into 48 parts	6.—	*Micene*
	Completely Divided Circles of Plate Glass:		
12.6490	Circle 8 cm in diameter divided into entire degrees	14.—	*Micent*
12.6491	Circle 12 cm in diameter divided into half degrees	20.—	*Micerent*

Appliances for Measuring Thicknesses.

No. **12.6500. Cover Glass Gauge.** The apparatus is mounted on a heavy foot and consists essentially of a screw with divided drum head and a scale reading complete revolutions. The instrument supplies direct readings of 0.01 mm and is suitable for measuring the thickness of cover-glasses, slides, thin plates, etc. It measures objects up to 5 mm thick.

No. **12.6510. Cover Glass Gauge, Dial Pattern.** In this instrument thicknesses are measured between the jaws of callipers projecting from a circular box. Readings are furnished by the movements of a pointer which moves over a dial which forms the lid of the box. The graduation reads hundredths of a millimetre. The instrument will measure objects up to 8 mm thick.

Counting Appliances.

For **counting small particles,** such as blood corpuscles, yeast cells, bacteria and such like, one employs **Cross Line Micrometers.** These are applied either in the form of Eyepiece Cross Line Micrometers or in that of Stage Cross Line Micrometers.

Eyepiece Cross Line Micrometer. This consists of a thin disc of glass 19 mm in diameter similar to the ordinary eyepiece micrometer and having ruled upon it a square of 5×5 mm divided into squares of 1×1 mm (No. **12.5160**) or of 0.5×0.5 mm (No. **12.5165**), as may be preferred. This micrometer disc should be placed with the ruled face downwards upon the diaphragm of a Focussing Eyepiece (page 85).

The actual reading values of each square of the Eyepiece Cross Line Micrometer in terms of the dimensions of the object require to be calibrated for each combination of objective and eyepiece by means of a Stage Micrometer (Booklet *Mikro 273*).

No. **12.5180. EHRLICH's Eyepiece Stops.** **The Eyepiece Stops suggested by P. EHRLICH** are provided with square apertures of 1, 2, 3, 4, 6, 8 and 9 mm side and serve, after the manner of cross line micrometers, for counting objects within a field of a known magnitude.

No.		Marks	Codeword
12.6500	**Cover Glass Gauge**	**20.—**	*Micetis*
12.6510	**Cover Glass Gauge, Dial Pattern**	**33.—**	*Micetomisa*
11.5160	**Eyepiece Cross Line Micrometer,** 1 mm squares, in capsule	**5.—**	*Michael*
11.5165	**Eyepiece Cross Line Micrometer,** 0.5 mm squares, in capsule	**5.—**	*Michaelia*
11.5180	**P. EHRLICH's Eyepiece Stops,** Set of seven . .	**10.—**	*Michaelis*

Excepting when the EHRLICH Stops are merely required to compare the numbers of particles contained within the same area the actual reading values of the squares in terms of dimensions of the object require to be calibrated for each combination of objective and eyepiece with the aid of a stage micrometer.

The EHRLICH Stops are adapted for use with focussing eyepieces only.

Stage Cross Line Micrometer. Stage Cross Line Micrometers are usually employed in conjunction with a **Counting Chamber,** i. e. a cell of a uniform and accurately determined depth, the cross line micrometer forming the bottom of the cell. In the THOMA Counting Chamber No. **12.6600,** which is more extensively used than any other, the ruling consists of 400 squares having an area of one square millimetre each.

The rulings of the Cross Line Micrometers vary very largely, and the counting chambers vary likewise in their sizes and depths. They are chiefly used for counting blood corpuscles. The most extensively used Counting Chamber together with appurtenances for counting are described in our booklet *Mikro 10.*

No. **12.6604. *THOMA Blood Counting Apparatus** or **Haemacytometer.** This device consists of a counting chamber and one or two accurately calibrated **Mixing Pipettes,** the whole being fitted into a case. We supply the apparatus in various combinations, the one most extensively used being **THOMA's Haemacytometer** with a Mixing Pipette for Red Corpuscles and another for White Corpuscles.

No. **12.6960. *BÜRKER's Haemacytometer.** This arrangement is devised with a view to minimising the errors which may arise in the act of setting up the apparatus and mixing in the pipettes, to accomplish which the apparatus is set up before use, the blood mixture is prepared in a separate vessel, and separate transference pipettes are used. A complete apparatus of this kind is now available for counting red corpuscles. Directions and Charts for plotting the counts are provided with the apparatus.

Cf. Separate Prospectus of Counting Chambers, Complete Sets of Counting Apparatus and Accessories: *Mikro 10.*

No.		Marks	Codeword
12.6600	**THOMA Counting Chambers** (Stage Cross Line Micrometer with two cover-glasses), in case . .	**14.** –	*Michaelite*
12.6604	**THOMA Haemacytometer,** being a Counting Chamber No. **12.6600** with two Mixing Pipettes, in case	**27.**—	*Michaelmas*
12.6960	**BÜRKER's Apparatus for Counting Red Blood Corpuscles,** complete	**66.**—	*Michaelmos*

CARL ZEISS
JENA

Mikro 184, Beilage Nr. 5.

Betrifft S. 90.

Der **Deckglastaster Nr. 12.6500** und
der **Deckglastaster in Dosenform Nr. 12.6510**
werden nicht mehr geliefert.

Statt dessen führen wir den

Deckglastaster Nr. 12.6505

Preis: *M* **50.—** Telegr.-Wort: *Middeling*

Die Konstruktion dieses Tasters ist ähnlich der von **Nr. 12.6500.**

G. VII. 19.

C. *Apertometers, *Test Plate, *Diffraction Apparatus.

Apertometers. The Apertometer is a simple apparatus devised by ABBE in 1876 for determining the numerical and angular aperture of objectives. It can be used with any large or medium sized stand fitted with a draw-tube. The apparatus is supplied with a low power objective of about 40 mm focus which screws into the lower end of the draw-tube. The auxiliary microscope thus formed by the combination of this objective and the eyepiece having been focussed upon the exit pupil of the objective attached to the end of the tube proper, the aperture of the latter may be read off the rulings on the apertometer by means of two movable metal indices.

The theory of the apparatus and the method of measuring with it are explained in a paper by ABBE, Journ. Roy. Micr. Soc. (1), **1,** 19—22, 1878, and (1), **3,** 20—31, 1880; E. ABBE, Gesammelte Abhandl. I, 113—118, 1904, and 227—243; also DIPPEL, „Das Mikroskop", **I,** 348—352. Directions of the use of the ABBE Apertometer, leaflet *Mikro 114,* are supplied with the instrument.

We supply two patterns of the Apertometer. In one of these (No. **12.7600**) the indices move upon the glass plate without metal guides, whilst in the other (No. **12.7605**) the glass slab is mounted upon a metal plate with a slot for the easier and more accurate displacement of the indices.

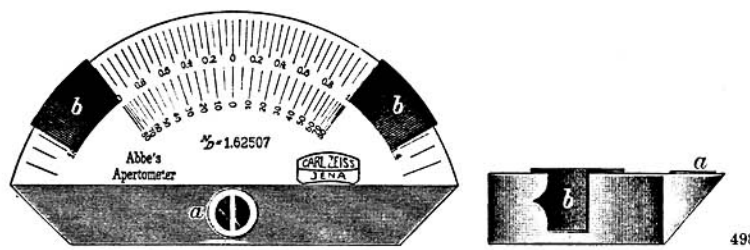

as seen from above — as seen from the side

Fig. 46.

Apertometer No. 12.7600.
(About ¾ Full Size.)

No.		Marks	Codeword
12.7600	**ABBE Apertometer,** in case	**70.—**	*Michaelstag*
12.7605	**ABBE Apertometer,** with metal slide way for the indices	**90.—**	*Michaiah*

No. **12.7610. Test Plate.** This was devised by ABBE in 1876 as a means of testing objectives with respect to their spherical and chromatic aberrations and for ascertaining the thickness of the cover-glass at which the correction of the objective is best. When used in conjunction with the ABBE illuminating apparatus as a means of establishing the conditions of critical illumination it serves to bring out prominently the slightest imperfections in the correction.

The Test Plate, as now made, consists of an object slide upon which is mounted a long narrow strip of optically plane cover glass, which tapers uniformly from 0.24 mm at one end to 0.09 mm at the other end. A scale is attached to the device, by means of which the thickness at any point of the wedge can be read accurately within 0.01 mm. The bottom of the cover-glass is silvered and has ruled upon it four sets of parallel lines. The jagged edges of these rulings form exceedingly sensitive test objects for objectives of the highest power.

Details respecting the method of applying the test have been published by E. ABBE, Arch. f. mikr. Anat., **9**, 434—437, 1873; Gesammelte Abhandlungen, **1**, 66—68, 1904; DIPPEL, Das Mikroskop, **1**, 340; as well as in the "Directions", *Mikro 116,* supplied with the Test Plate.

No. **12.7620. Diffraction Apparatus.** This apparatus was devised by ABBE in 1876 for demonstrating the effects of diffraction in the formation of microscopical images. It consists of a Diffraction Plate No. **12.7621** and a Set of Stops with a fitting for supporting and rotating them above the objective.

The stops supplied with the Diffraction Apparatus are adapted for use with the Objective aa only.

The successful use of this demonstration apparatus implies an adequate knowledge of the theory of diffraction. Information on the subject may be gleaned from textbooks on microscopy and various papers. We may refer the reader amongst others to the Monthly Micr. Journ., **17**, 82—88, 1877; DIPPEL, Das Mikroskop, **1**, 147—156; ZIMMERMANN, Das Mikroskop, 46—51, Vienna, 1895; MÜLLER-POUILLET, Lehrb. der Physik, **2**, Vol. 3, tenth Edition by O. LUMMER, Brunswick, 1907.

No. **12.7621. Diffraction Plate.** This device consists of a glass slide upon which are mounted three cover glasses. The lower sides of the latter are silvered and have a number of simple and crossed gratings ruled upon them.

No.		Marks	Codeword
12.7610	**ABBE Test Plate,** in case	**10.—**	*Michauxie*
12.7620	**ABBE Diffraction Apparatus**	**20.—**	*Miche*
12.7621	**ABBE Diffraction Plate only,** in case	**8.—**	*Michel*

D. Appliances for Microscopic Observation with Polarised Light.

Polarisers.

The Polarisers, as usually supplied for use with microscopes have their end surfaces inclined to the axis of vision.

No. **12.7801. Polariser** No. **I.** This polariser has an aperture of 10 mm and is intended for use with the Stands **I, III** and **IV.** The polariser is contained in a metal mount which drops from above into the diaphragm carrier, to which it is then secured from below by means of a lock ring. The flange of the mount is recessed for the reception of mounted mica and selenite films.

No. **12.8702. Polariser** No. **II.** This polariser has an aperture of 8 mm and is supplied as an attachment to the Condenser of Stand **V** D. Polariser No. **II** can be attached to the iris-diaphragm of the illuminating apparatus No. **11.4310** (page 31) and may be supplied at any time as an addition to the microscope.

Polarisers should preferably be used on stands fitted with revolving stages.

Analysers.

The Analysers usually supplied by us take the form of prisms having an aperture of 6 mm and have the end faces at right angles to the axis of the microscope.

No. **12.7831. Analyser** No. **I.** This analyser is comtained in a metal mount which is so shaped that it will rest upon the eyepiece.

No. **12.7832. Analyser** No. **II.** This analyser revolves within a graduated circle fitted with a socket for attachment to the microscope tube. The eyepiece should be slipped into the tube when the analyser has been secured in position.

No.		Marks	Codeword
12.7801	**Polariser No. I,** for use with Stands I, III and IV	22.—	*Michele*
12.7802	**Polariser No. II,** for use on Stand V	11.—	*Micheletti*
12.7831	**Analyser No. I**	15.—	*Michelia*
12.7832	**Analyser No. II,** with divided circle	30.—	*Michelos*

With analysers of this type it is not possible to obtain a view of the entire field without moving the eye about.

ABBE Analyser Eyepieces.

In these eyepieces an analyser of a special type is mounted between the eyepiece lenses. This arrangement has the special advantage that the entire field of view of the microscope can be surveyed without the necessity of moving the eye about. It has, however, this slight disadvantage that the second laterally deflected image of the analyser prism remains feebly visible.

No. 12.7860. **Huyghenian Analyser Eyepiece** No. I, **being a Huyghenian Eyepiece** No. 2 mounted for use with achromatic objectives.

No. 12.7861. **Compensating Analyser Eyepiece** No. I, being a **Compensating Eyepiece** No. 4 mounted for use with apochromatic objectives.

These eyepieces may also be mounted in the form of Analyser Eyepieces No. II with divided circle.

Combinations of Polarisers and Analysers.

For keeping the polarisers and analysers protected from damage we supply the various **Combinations of Polarisers and Analysers** in specially fitted cases. The prices of some of these combinations will be found below.

In the event of a divided circle, such as that of our Goniometer Eyepiece (p. 87), being available the analyser may be adapted for use with it. In this case the price is that of the combination without divided circle plus **M. 3.**— for the adaptation of the mount of the analyser to the existing circle. The divided circle should be sent to us for this purpose.

No.		Marks	Codeword
12.7860	**Analyser Eyepiece H. I** for use with achromatic objectives	40.—	*Michelozzo*
12.7861	**Analyser Eyepiece C. I** for use with apochromatic objectives	53.—	*Michels*
12.7862	**Analyser Eyepiece H. II** for use with achromatic objectives, with divided circle	55.—	*Micher*
12.7863	**Analyser Eyepiece C. II** for use with apochromatic objectives, with divided circle	68.—	*Michery*
	Combinations of Polarisers and Analysers for use with Stands I, III and IV.		
12.7880	**Polariser I** and **Analyser I**, in case	41.—	*Miching*
12.7881	„ **I** „ „ **II**, in case	58.—	*Michito*
12.7882	„ **I** „ **Analyser Eyepiece H. I**, in case	66.—	*Micho*
12.7883	„ **I** „ „ „ **C. I**, „ „	79.—	*Michordia*
12.7884	„ **I** „ „ „ **H. II**, „ „	83.—	*Michon*
12.7885	„ **I** „ „ „ **C. II**, „ „	96.—	*Michotte*

Selenite and Mica Films. We supply four standard **Selenite Films,** viz. Red of the I., II., III. and IV. Orders, also four **Mica Films,** viz. $\frac{1}{8}\lambda$, $\frac{1}{4}\lambda$, $\frac{3}{8}\lambda$ and $\frac{1}{2}\lambda$. These eight films constitute **MOHL's Set of Selenite and Mica Films** No. **12.7900.** The films are mounted in cardboard.

The films in cardboard mounts fit the recess in the top flange of the Polariser **I,** No. **12.7801.** In addition, they are supplied in metal mounts for placing under the analyser upon the eyepiece (Stand **V**).

A Selenite Film for Red of the I. Order suffices in most cases.

Selenite Films of other Orders: In cardboard mounts, each **M. 2.—,** in metal mount, each **M. 3.—; Mica Films** in cardboard mounts, each **M. 1.50,** in metal mount, each **M. 2.50.**

Such other devices as are required for purely mineralogical investigations will be found listed in our Catalogue of Petrological Microscopes.

No.		Marks	Codeword
12.7900	**MOHL's Set of Films,** mounted in cardboard .	**15.—**	*Michovius*
12.7901	**Selenite Films,** Red I. Order, for Polariser **I** in cardboard mount	**3.—**	*Michuacane*
12.7911	**Selenite Films,** Red I. Order, for interposition between the eyepiece and analyser, in metal mount	**4.—**	*Micida*

E. Instruments for Observation with Spectroscopically Decomposed Light.

No. **12.8100.** ***ENGELMANN's Microspectroscopic Objective** with Centring Device.

This apparatus serves for studying the effects exercised upon microscopic objects by light belonging to any particular region of the spectrum (Bot. Zeit., **40,** 419—426, 1882; Pflüger's Arch. f. d. ges. Physiol., **27,** 485—490, 1882). Details respecting this apparatus are given in our pamphlet *Mikro 232.*

No. **12.8110. ROLLET's Spectrum Polariser** with Centring Device, as modified by DIPPEL.

This apparatus serves for determining the nature and intensity of the double refraction of microscopic objects in spectroscopically decomposed light (Zeitschr. f. Instrumentenk., **1,** 366—372, 1881; DIPPEL, ibid., 619).

No. **12.8130. *ABBE's Microspectroscopic Eyepiece** (Fig. 47). This eyepiece is primarily intended for the observation of the absorption spectra of microscopic objects, and it is likewise available for the spectroscopic examination of fairly large objects, fluid strata and such like.

The achromatic eyelens of the eyepiece can be sharply focussed with respect to a slit situated in the plane of the diaphragm. By means of a trigger device a comparison prism can be placed against the slit for the spectroscopic comparison of the object with other media, which can for this purpose be

No.		Marks	Codeword
12.8100	**ENGELMANN's Microspectroscopic Objective** in case	**170.—**	*Micidam*
12.8110	**ROLLET's Specrtum Polariser,** with Selenite Film Red II. and III. Order, in case	**220.—**	*Micidiale*

introduced in a suitable mount at the side of the eyepiece. A number of glass tubes are supplied with the apparatus.

The eyepiece is surmounted by a direct-vision AMICI prism, which is contained within a pivoted mount and may be swung aside. A lateral tube attachment with lenses and a mirror serves to project a wave-length scale upon the spectrum as seen by the eye.

The instrument is supplied with Directions *(Mikro 125)*.

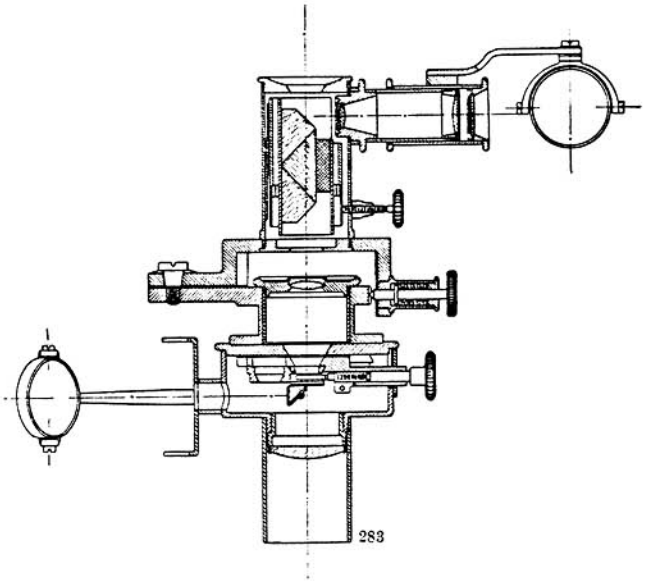

Fig. 47.

ABBE's Microspectroscopic Eyepiece No. 12.8130.
Longitudinal Section through the entire Apparatus
(½ Full Size).

No.		Marks	Codeword
12.8130	**ABBE Microspectroscopic Eyepiece . . . .**	**200.—**	*Micidiare*

MÉDIATHÈQUE La Villette

F. Appliance for Microscopic Observations at Raised Temperatures.

L. PFEIFFER's Heating Chambers for heating microscopical objects during observation (L. PFEIFFER, Protozoen als Krankheitserreger etc., 2nd Edition, Jena, 1891).

The chamber consists of a mahogany box which is sufficiently large to encase the entire microscope and fitted in front with a window to admit light to the mirror. On either side is a closely fitting door through which the object slide can be manipulated with the fingers. The side walls are hinged to the front and may be folded aside together with either half of the back, which is divided down the middle.

The whole with the microscope enclosed rests upon a thick metal plate fitted with three legs. The metal plate is heated from below by means of a **Micro Burner** No. **12.8325,** which burns with a smokeless flame and is controlled by a **Thermo-regulator.**

By this means the whole stand and the air surrounding it are gradually brought to the same temperature and when sufficient time has been allowed to elapse the readings of the thermometer placed in the air space will indicate the actual temperature of the object on the stage.

The temperature may be raised to 45° C without risk of injury to the stand or its objectives.

The Heating Chambers require to be adapted to the shape of the stand. When ordering a Heating Chamber independently, the factory number engraved on the stand with which it to be used should be stated.

A Thermo-regulator No. **12.8320** and a Thermometer are included in the equipment of the Heating Chamber. The Microburner No. **12.8325** is not included and should be ordered additionally.

No.		Marks	Codeword
	L. PFEIFFER's Heating Chamber		
12.8301	For Microscope Stand No. I	**100.—**	*Micidiario*
12.8303	„ „ „ No. III	**100.—**	*Micidio*
12.8304	„ „ „ No. IV	**70.—**	*Micidior*
12.8305	„ „ „ No. V	**65.-**	*Micidiora*
12.8320	**Thermo-regulator**	**10.—**	*Micidiores*
12.8325	**Microburner** for the Heating Chambers	**4.50**	*Micidorum*

No. **12.8330. L. PFEIFFER's Heating Object Stage.** This apparatus, as made by Messrs. E. LEYBOLD's Nachfolger, of Cologne, consists of a glass box made up of glass plates joined by LEYBOLD's partial fusing process. It is 10 mm high and can be used like an object slide. The stage is heated by a stream of warm water, the latter being maintained at the required constant temperature by a boiling flask heated by a microburner No. **12.8325** taking its gas supply through a Thermo-regulator No. **12.8320.** The thermometer as well as the inlet and outlet tubes for the water are cemented into the sides of the glass box.

No. **12.8331. L. PFEIFFER's Heating Stage** is available for the observation of hanging drop preparations. In this case the upper glass surface has polished cavities upon which the cover-glasses may be placed without the use of slides.

No. **12.8340. *GUTMANN's Heating Stage.** This consists of a disc of fused quartz perforated at the middle and having an electric heating wire of platinum embedded in it by fusion. To prevent direct contact between the object slide and the radiating plate the latter is mounted upon a plate with slightly raised edges, which rests upon the microscope stage and is retained in position by the stage opening. This plate is fitted with terminals for the electric current. Suitable resistances should be provided. For temperatures above 100° C it is best to use object slides of quartz or very thin glass slides.

The metal plate cannot be used with Stands **V A** or **VI.**

No. **12.8360. Gas-heated Condenser.** For the observation at higher temperatures (100 to 900° C) of microscopic objects, especially liquid crystals, we have devised a special condenser arrangement fitted with a polariser 25 mm long and heated by a gas burner. A description of this apparatus is to be found in our pamphlet *Mikro 192.*

For the purpose of maintaining for some considerable time a constant temperature or slightly raising it when observing living bacteria ROWLAND has suggested a warm water jacket arrangement for use with the Aplanatic Condenser. Particulars of this will be furnished on application.

No. **12.8380. ZOTH's Cooling Trough,** which is mainly intended for use in microscopic projection, can be fitted with a thermometer and is then available for use as a heating object stage.

No.			Marks	Codeword
12.8330	**Heating Object Stage** with plain top	incl. thermometer, and inlet and outlet tubes	9.—	*Micidos*
12.8331	**Heating Object Stage** with concave depressions		15.—	*Micidus*
12.8340	**GUTMANN's Heating Stage** with Heating Plate		50.—	*Micio*
12.8341	**Heating Plate only**		16.—	*Micippe*
12.8360	**Gas-heated Condenser** with Polariser		290.—	*Micipsa*
12.8380	**ZOTH's Cooling Trough,** with thermometer . .		17.50	*Miciriri*

G. Various Accessories.

Eyepieces for Special Modes of Observation.

No. **12.8500. *ABBE's Stereoscopic Eyepiece** (Fig. 48). By this attachment microscopic objects can be viewed in stereoscopic relief under any magnification, or it may be used as a means of viewing an object with both eyes but without stereoscopic effect. In either case the arrangement imposes no restrictions as

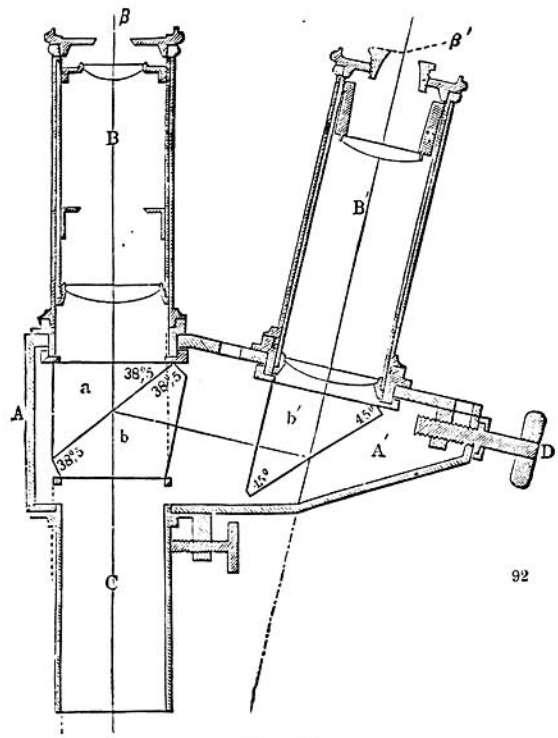

Fig. 48.
ABBE's Stereoscopic Eyepiece, No. 12.8500.
($\frac{2}{3}$ Full Size).

regards magnification (cf. CARL's Repertorium **17,** 197—224, 1881; Journ. Roy. Micr. Soc. (2), **1,** 203—211, 1881; E. ABBE, Ges. Abhdl., **1,** 244—272, 1904).

To obtain the two independent images required to produce a relief picture or binocular vision the pencils transmitted through the objective are at the upper end of the tube split into two sets of pencils by partial reflection at a very thin stratum of air which separates the faces of the prisms *a* and *b*. The approximate

No.		Marks	Codeword
12.8500	**ABBE's Stereoscopic Eyepiece,** in case . . .	**180.—**	*Micis*

bisection of either pencil by semicircular stops situated above the eyepieces furnishes the final stereoscopic effect by reason of which the object is seen in relief. Without these stops, i. e. when looking through the unrestricted aperture of the eyepieces, the instrument is merely a means of viewing with both eyes, but there is no stereoscopic effect.

One of these eyepieces is mounted on a movable slide and can be adapted to the distance between the observer's eyes. The apparatus is available for use with achromatic objectives only. The tube of the microscope should be shortened down as much as possible, and it is not advisable to use revolving nosepieces or other changing appliances.

No. **12.8510.** ***Drum with PORRO Erecting Prisms.** This attachment is similar to the prism arrangement in our Erecting Microscopes, the prisms being contained in a metal drum fitted with sockets above and below for insertion into the microscope tube and for the reception of any ordinary eyepiece.

No. **12.8520.** **AMICI Erecting Prism.** This prism is so mounted that it can be placed upon the top of the eyepiece and, besides erecting the image as seen in the microscope, it enables the observer to look into the microscope at an angle of about 30° with respect to its axis, which greatly adds to the observer's comfort.

***Pointer Eyepieces.** When demonstrating a microscopic object to another person it is often a great help to be able to draw attention to any particular element by means of a pointed index needle. We have for this purpose devised Pointer Eyepieces, of which we make two patterns. In the simpler pattern of the Pointer Eyepiece the mount is fitted at the side with a fine spindle which carries at its lower extremity a fine pointer and at its top a short handle for directing the latter. Any of the Huyghenian Eyepieces Nos. **2, 3** and **4** can be arranged as a Pointer Eyepiece in this way (Nos. **11.5802—11.5804**). In addition, the Huyghenian Eyepieces Nos. **2** and **3** as well as the Compensating Eyepiece No. **6** are supplied in the form of drum micrometer eyepieces (page 86) fitted with a loose index No. **11.5820**, which can be displaced by means of the screw fitted to the drum in the same way as the micrometer disc.

No.		Marks	Codeword
12.8510	**Drum with PORRO Prisms,** without eyepiece, in case	**40.—**	*Micite*
12.8520	**AMICI Erecting Prism,** in case	**25.—**	*Micke*
11.5802	**Simple Pointer Eyepiece** No. **H. 2**	**13.—**	*Micken*
11.5803	„ „ „ No. **H. 3**	**13.—**	*Mickert*
11.5804	„ „ „ No. **H. 4**	**13.—**	*Mickknopf*
11.5820	**Pointer,** loose for use with drum eyepieces . .	**1.—**	*Mickle*
11.5822	**Drum Eyepiece** No. **H. 2,** arranged as a Pointer Eyepiece	**36.—**	*Mickmack*
11.5823	**Drum Eyepiece** No. **H. 3,** arranged as a Pointer Eyepiece	**36.—**	*Mickrig*
11.5826	**Drum Eyepiece** No. **C. 6,** arranged as a Pointer Eyepiece	**49.—**	*Micky*

Cross Line Eyepieces. These serve the purpose of exhibiting in the plane of the eyepiece diaphragm two lines crossing in the field, to mark its centre, for the purpose of centring object stages or objectives attached to centring devices as well for adjusting the centre of rotation in investigations with polarised light. For this purpuse we supply **glass discs having cross lines ruled upon them,** to rest upon the diaphragm of the eyepiece. One disc is thus available for use with various eyepieces. It is, however, more convenient and conducive to greater accuracy to use eyepieces with fixed cross lines. The diameter of the glass disc is 19 mm in the case of focussing eyepieces (p. 85) and 21 mm in that of ordinary eyepieces.

When ordering cross ruled glass discs separately it should accordingly be stated whether they are required for use with focussing eyepieces or ordinary eyepieces.

The cross ruling should appear sharply defined to the observer. This is the case with the ordinary eyepieces, provided that the observer has a normal eye. Where the eyepiece is required to be adapted for the use of several observers it is better to use a focussing eyepiece.

The Huyghenian eyepieces are also supplied for this purpose with fixed cross lines in the form of Focussing Cross Line Eyepieces without unscrewing upper half (Nos. 11.3702—11.3704).

The cost of altering an ordinary eyepiece into a focussing eyepiece with unscrewing upper half is M. 7.—.

No.			Marks	Codeword
11.3306	Focussing Eyepiece C. 6	adapted for loose cross ruled discs (but exclusive of these)	25.—	*Micografia*
11.3602	„ „ H. 2		11.—	*Micmac*
11.3603	„ „ H. 3		11.—	*Mico*
11.3604	„ „ H. 4		11.—	*Micognosia*
11.3700	Glass Disc with Cross Ruling, in capsule . .		4.—	*Micolino*
11.3702	Cross Line Eyepiece H. 2 . . .	with fixedly mounted cross ruled disc	12.—	*Micologico*
11.3703	„ „ „ H. 3 . . .		12.—	*Miconia*
11.3704	„ „ „ H. 4 . . .		12.—	*Miconiee*

*GREENOUGH's Prism Rotator and Capillary Rotator.

These two devices provide a means of viewing successively from various sides objects which are difficult to manipulate under the microscope without mechanical aid.

No. **12.8700. GREENOUGH's Prism Rotator** (Fig. 49). The top surface of an object manipulated by this device is seen direct, whilst the lower side is seen by two successive reflections at s_1 and s_2 (Fig. 49[b]), and by the rotation of the glass vessel with the prism P_1 (Fig. 49[a]) about the axis *a* (Fig. 49[b]) all the lateral portions of the object can be brought into view by reflection at s_3. From this it follows that the objects are seen in their true positions reversed as in a mirror.

Opaque objects having diameters of 0.5 to 3 mm can be examined by this rotator in air as well as liquids. The magnification may be as high as 100 diameters.

The holders H_1, H_2 may be employed for the suspension of small electric glow lamps, by means of which the object may be illuminated.

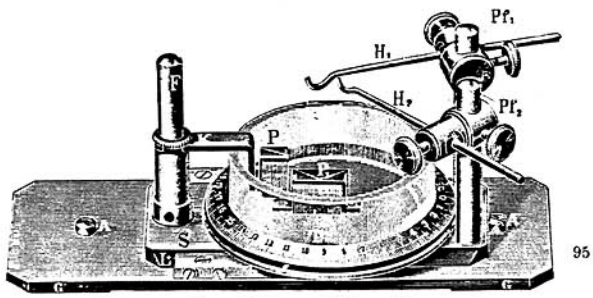

a: Perspective View of the Apparatus (⅔ Full Size).

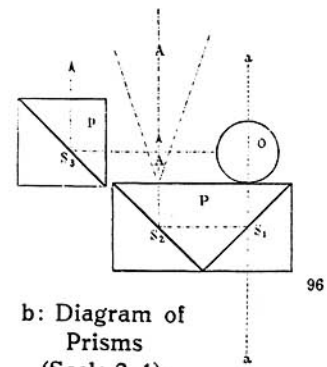

b: Diagram of Prisms (Scale 2:1).

Fig. 49.
Prism Rotator No. 12.8700.

No. **12.8702. GREENOUGH's Prism Rotator** with Two Reflecting Prisms.

As in many cases the reversal in the position of elements situated at the sides of the objects, which arises from the fact that they are seen by a single reflection, may be very disturbing, another prism has been added in this pattern, which rectifies this defect.

No.		Marks	Codeword
12.8700	**Prism Rotator,** in case	**62.—**	*Micorps*
12.8702	**The same Apparatus, with two prisms to bring the sides of an object into view** without mirror reversals	**75.—**	*Micos*

No. **12.8710. GREENOUGH's Capillary Rotator** (Fig. 50). By means of this device small transparent objects contained in a capillary tube for examination in transmitted light may be rotated about a horizontal axis whilst being viewed. The instrument is so arranged that the capillary glass tubes may be rotated within a chamber filled with cedarwood oil, the object of which is to obviate the disturbing effect of refraction and reflection at the sides of the narrow glass tube. The latter has a bore of 0.2 mm. The capillaries are interchangeable. This apparatus is available for observation under high magnifications.

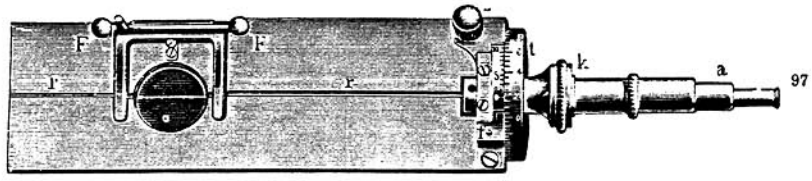

Fig. 50.
Capillary Rotator No. 12.8710.
($\frac{3}{5}$ Full Size).

The Prism Rotator and Capillary Rotator have been primarily devised for use with the Binocular Stand **XA**. Whilst the Capillary Rotator can also be used with any other stand, the use of the Prism Rotator is restricted to those having a stage opening of 33 mm, as otherwise it cannot be properly secured in position. It cannot accordingly be used with Stands **VI.**

Details respecting these devices will be found in a paper published in the Z.-S. f. wiss. Mikr. **14,** 304—312, 1897.

Other Accessories.

No. **12.8900. Object Slide of Rock Crystal,** 30 × 25 mm. These slides are used in the preparation of objects which are to be subjected to ultra-violet radiation (Luminescence Microscope, pp. 30 and 31). For their convenient attachment to the stage they are mounted in metal slides of the standard size (HEIDENHAIN's pattern No. **12.8909**).

No. **12.8920. Euphos Cover Glasses.** These cover-glasses absorb the ultra-violet light which in the luminescence microscope energises the preparation and thus prevents it from entering the microscope and reaching the eye of the observer.

No.		Marks	Codeword
12.8710	**Capillary Rotator,** in case, without capillaries .	**50.—**	*Micostalis*
12.8711	**Capillaries** of about 0.2 mm bore, per twenty .	**1.—**	*Micra*
12.8900	**Object Slides of Rock Crystal,** 30 × 25 mm, each	**4.50**	*Micropylar*
12.8909	**Aluminium Object Slide,** HEIDENHAIN's pattern	**2.—**	*Micropyle*
12.8920	**Euphos Cover-glass**	**1.—**	*Mictualia*

No. **12.9200. Breath Shield** for attachment to the microscope. This attachment consists of a sleeve with an oblong strip of aluminium. The sleeve slips over the eyepiece end of the tube and serves to protect those parts of the microscope which are nearest the mouth and nose from deposits of moisture.

No. **12.9210. Objective Centring Adapter** for adjusting objectives relatively to the centre of revolving stages which cannot be centred. The adapter attaches to the microscope tube and, when used in conjunction with a fixed or centring stage, may be employed to establish perfect alignment between the condenser and objective.

No. **12.9220. MALTWOOD's Finder.** This is a simple device for quickly finding any particular element in a preparation which has been noted on a previous occasion. It consists of a network of small squares photographed on glass, all of which are numbered. It is now made in a slightly different form from that described originally (Z.-S. f. wiss. Mikro **5,** 40, 1888).

No. **12.9230. Object Marker (W).** For the purpose of marking, for future identification, any given elements in an object we supply a marking device made by Messrs. WINKEL, of Göttingen. The device is fitted with a fine diamond by means of which a very small circle can be drawn round the element which is to be identified. The diamond point can be displaced so that the diameter of the circle can be varied according to the size of the field.

No. **12.2932. FÜLLEBORN's Object Marker.** This device, which is likewise made by Messrs. WINKEL, of Göttingen, is fitted with a fine steel point and serves for ruling circles into the substance of smear preparations.

No. **12.9240. BORN and PETER's Orientation Plate.** This plate serves for orientating an object within congealing paraffin and at the same time to inscribe guide lines upon the finished paraffin blocks. For this purpose the plate has on one side several parallel and sharply edged grooves of uniform width cut into it. A detailed description and directions will be found in the Z.-S. f. wiss. Mikr. **15,** 31—49, 1898.

We supply for use with the Orientation Plate a pair of Glass L Pieces (No. **12.9241**).

No. **12.9250. Turn Table,** mounted on wooden foot, for ringing specimens with lacquer.

No.		Marks	Codeword
12.9200	**Breath Shield** for attachment to microscopes . .	**2.—**	*Micrabacia*
12.9210	**Objective Centring Device** for attachment to the tube	**9.—**	*Micraeca*
12.9220	**MALTWOOD's Finder,** in case	**20.—**	*Micranthes*
12.9230	**Object Marker (W)**	**35.—**	*Micrandra*
12.9232	**FÜLLEBORN's Object Marker**	**18.—**	*Micrantho*
12.9240	**BORN and PETER's Orientation Plate** with two Glass L Pieces	**40.—**	*Micraspis*
12.9241	**Pair of Glass L Pieces,** separately	**10.—**	*Micrantha*
12.9250	**Turn Table,** on wooden foot	**11.—**	*Micranthe*

H. Appliances for the Artificial Illumination of Microscopic Objects.

If properly adjusted, lamplight can be made to form an almost perfect substitute for daylight as a means of illuminating microscopic objects. Incandescent gas burners, Nernst lamps and arc lamps provide a sufficiently intense radiant and can be made to furnish a sufficiently wide beam of light for microscopic observation by interposing between the radiant and the mirror a lens or other suitable optical combination by means of which the aperture of the condenser may be completely filled with light.

Radiants furnishing a **continuous spectrum** should be used for observation with **white** light, whilst observation with **homogeneous** light is greatly facilitated when a radiant is used which furnishes a **line spectrum.**

No. **13.9000. Hageh Microscope Lamp.** In this lamp the radiant is a mercury vapour lamp with a vapour tube 20 cm long. It is mounted on a stand which carries, in addition, a small boiling flask with filtering fluid. The lamp should not be connected to the electric light system excepting with the resistance and coil provided with it joined up in series with it. It consumes a current of about 3.5 amperes.

The lamp supplies monochromatic light and is adapted for fine microscopic investigations and demonstrations respecting the theory of the formation of microscopic images. According to the filter medium used the light may be yellow (WL = 579 and 576 $\mu\mu$), green (WL = 546 $\mu\mu$) or blue (WL = 436 $\mu\mu$).

Detailed information is contained in the Directions furnished with the lamp *(Mikro 271)*.

No. **13.9100. Incandescent Gas Microscope Lamp.** The radiant is an inverted incandescent gas burner of a small pattern (Midget burner Fig. 51). It is mounted on a foot with a stand which supports a boiling flask containing a

No.		Marks	Codeword
13.9000	**Hageh Lamp,** Type Bl, 20 cm long	**18.—**	*Proam*
	Hageh Microscope Lamp, complete, including		
13.9010	**Resistance** with Coil for 110 Volts	**88.90**	*Proarche*
13.9012	„ „ „ „ 220 „	**98.90**	*Proarches*
13.9100	**Incandescent Gas Microscope Lamp,** complete	**20.—**	*Proarch*

filtering fluid. (Water or a faintly blue solution of copper sulphate). The stand should be so placed in front of the microscope that the beam of light passed through the filter may form an image of the radiant on the mirror.

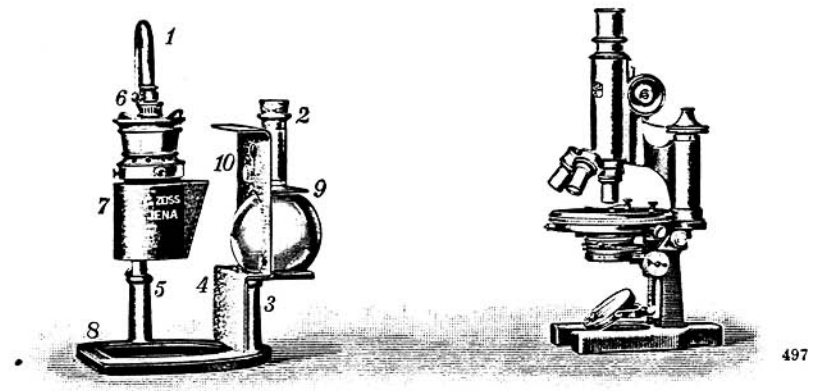

Fig. 51.
(about $\frac{1}{3}$ Full Size.)

No. **13.9110. Electric Incandescent Microscope Lamp.** This lamp is similar to No. **13.9100,** excepting that the gas burner is replaced by a frosted glow bulb.

When ordering please state the nature of the available current and its voltage.

No. **13.9120. Nernst Microscope Lamp.** (Micro Nernst Lamp). In this lamp a foot with pillar made of porcelain in one piece (Fig. 52) carries on the

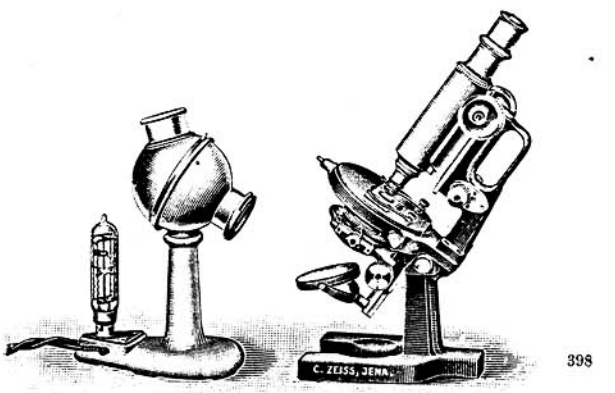

Fig. 52.
Micro Nernst Lamp No. 13.9120 and Stand III.
(about $\frac{1}{7}$ Full Size.)

No.		Marks	Codeword
13.9110	**Electric Incandescent Microscope Lamp** . .	**20.—**	*Proagione*
13.9120	**Micro Nernst Lamp,** not self-starting	**40.—**	*Proaviti*
13.9126	**Tinol Burner** for igniting the Nernst Lamp . .	**1.50**	*Proavitior*

latter within a metal casing a Nernst glower and a condensing lens. The lamp throws a beam of light obliquely downwards upon the microscope mirror. It takes a current of 1.25 ampere and may be employed either with a direct current or an alternating current, the glower being selected accordingly. The lamp is not self-starting and hence the glower requires, after switching on the current, to be rendered incandescent with the aid of a spirit lamp (Tinol burner) or a gas flame. For observation in transmitted light the beam of light emitted by the lamp should be moderated according to requirement with the aid of one or other of the frosted glass plates supplied with the lamp. For dark ground illumination it is generally necessary to use the light with its undiminished intensity.

Full particulars will be found in the Directions (Mikro 277).

When ordering please state the nature of the available current and its voltage.

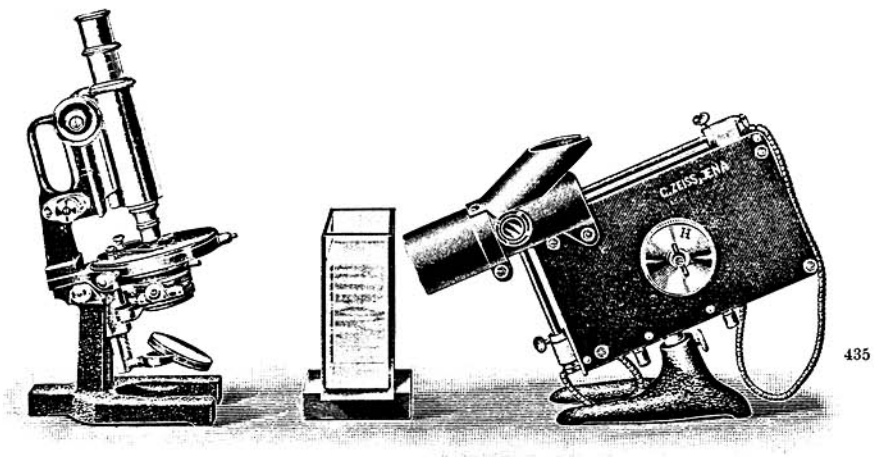

Fig. 53.
Electric Microscope Lamp (Hand Regulating Arc Lamp).
(about ¼ Full Size.)

No. **13.9160. Microscope Arc Lamp.** An arc lamp using a small current is exceedingly useful for microscopic observations requiring a very intense illumination, especially for bringing into view very difficult objects with the aid of dark ground illumination and for the ultra-microscopic observation of colloid substances. Apart from Weule's self-regulating arc lamp we supply a **Hand Regulating Lamp** (Fig. 53) fitted **with a Condenser of great light transmitting power** (Micro Arc Lamp), which consumes about 2 to 4 amperes and which can be used with a direct current as well as with an alternating current. Against the possibility

No.		Marks	Codeword
13.9160	**Mirco Arc Lamp** (Hand Regulating Arc Lamp (with condensing lens), using about 4 amperes . . .	**47.—**	*Proavitos*
13.9161	**Carbons** for direct current, per 100 pairs . . .	**7.—**	*Proarchon*
13.9162	„ „ alternating current, per 100 pairs .	**7.—**	*Proareis*
13.9165	**Resistance** for 110 volts { with flexible cable } .	**12.50**	*Proarthri*
13.9166	„ „ 220 „ { and plug connector } .	**18.50**	*Proasma*

of excessive heating preparations should, if necessary, be protected by the interposition of a cooling trough filled with water or a ½% solution of copper sulphate with a little sulphuric acid. The lamp casts the light obliquely downwards. By rotation through an angle of 90° about the socket pin it may, however, be given a horizontal position.

When ordering, please describe the nature of the available current and state its voltage.

No. 13.9200. Incandescent Gas Lamp for use with the Vertical Illuminator. For this purpose the small gas lamp of No. 13.9100 is mounted on a wooden base fitted in front with a socket and stem which carry a condensing lens and an iris diaphragm. This furnishes a good illumination of the field of view and provides a means of sharphly limiting it. The apparatus has been dimensioned to supply an efficient and convenient light for work with the Vertical Illuminator (page 37).

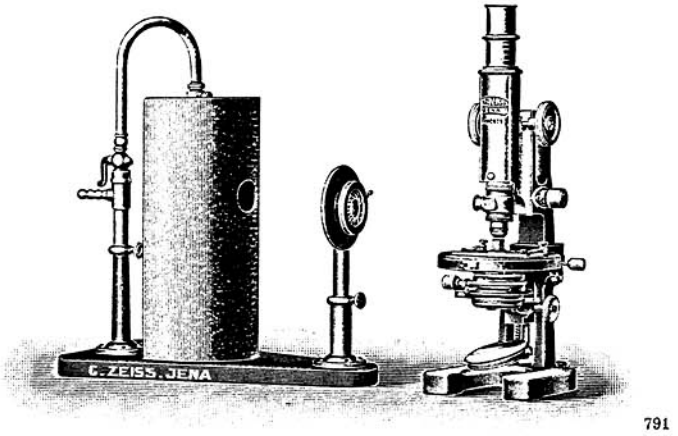

791

Fig. 54.
Incandescent Gas Lamp for the Vertical Illuminator and Microscope with Vertical Illuminator.
(about ½ Full Size.)

No. 13.9210. Electric Glow Lamp for use with the Vertical Illuminator. This is similar to No. **13.9200**, excepting that the gas burner is replaced by an electric glow lamp.

When ordering, please describe the nature of the available current and state its voltage.

No. 13.9250. Inclinable Condensing Lens mounted on a Foot. When an opaque object can be examined under lenses having a long working distance it is sufficient to illuminate it with the aid of a condensing lens. The latter should be moved close up to the microscope and, being inclinable, can be manipulated to any desirable extent.

No.		Marks	Codeword
13.9200	Incandescent Gas Lamp for use with Vertical Illuminators	37.—	*Proasmatis*
13.9210	Electric Glow Lamp for use with vertical Illuminators	37.—	*Proastia*
13.9250	Inclinable Condensing Lens on Foot	22.—	*Proasmatum*

IV. Bell Shades, Object Slides and Cover Glasses.

No.		Marks	Codeword
	Bell Shades for keeping microscopes under a dust-proof cover, **including** a stout cloth-lined mill-board **base:**		
	a) Of white glass:		
12.9601	Small Size, about 35 cm high, 20 cm inside diameter	7.—	*Micraster*
12.9602	Large Size, about 38 cm high, 24 cm inside diameter	9.—	*Micrasters*
	b) Of Amber Glass:		
12.9611	Small Size	8.50	*Micrathene*
12.9612	Large Size	10.50	*Micraulica*
	Bell Shades for keeping microscopes under a dust-proof cover, with flat ground glass plate for use as a base:		
	a) Of white glass:		
12.9621	Small Size	10.—	*Micrhyle*
12.9622	Large Size	12.50	*Microbal*
	b) Of Amber Glass:		
12.9631	Small Size	11.50	*Mictoriam*
12.9632	Large Size	14.—	*Mictoriis*
	Object Slides, English size, 3 × 1 inch: . . .		
12.9710	Crown glass, unground edges . . . . per 100	1.50	*Microbios*
12.9712	Extra-white crown glass, ground edges . „ „	2.80	*Microcarpa*
12.9713	Extra-white crown glass, ground edges, of stated thickness within 0.1 mm . . . . . per ten	0.40	*Mictorio*
12.9715	Plate-glass, ground edges . . . . . per 100	8.50	*Microcebus*
	Object Slides, large size, 3½ × 1½ inch.		
12.9730	Crown-glass, unground edges . . . . per 100	2.50	*Microcele*
12.9732	Crown-glass, ground edges . . . . . „ „	6.—	*Microcere*
	Object Slides with polished cavities, bevelled and polished edges:		
12.9750	Small Size, 55 × 32 mm . . . . . each	0.30	*Mictoriora*
12.9755	Large Size, 87 × 37 mm (3½ × 1½ inch) . „	0.40	*Microciona*
	Object Slides with attached Annular Glass **Cells** for use as moist chambers:		
12.9770	With Cell 0.4 mm deep . . . . . each	0.80	*Microclase*
12.9774	With Cell 1 mm deep . . . . . „	0.80	*Mictorium*
12.9776	With Cell 2 mm deep . . . . . „	0.80	*Mictorius*

No.		Marks	Codeword
	Cover Classes, Squares:		
12.9812	Size: 12 × 12 mm . . . . . per 100	1.—	*Microcosm*
12.9815	„ 15 × 15 „ . . . . . „ „	1.50	*Microcosme*
12.9818	„ 18 × 18 „ . . . . . „ „	2.—	*Microcosmi*
12.9821	„ 21 × 21 „ . . . . . „ „	2.75	*Mictuale*
12.9824	„ 24 × 24 „ . . . . . „ „	3.75	*Microcrith*
	Cover Glasses, Circles:		
12.9842	Size: 12 mm diameter . . . . . per 100	1.25	*Mictualem*
12.9845	„ 15 „ „ . . . . . „ „	2.—	*Microcytes*
12.9848	„ 18 „ „ . . . . . „ „	2.50	*Microdere*
12.9851	„ 21 „ „ . . . . . „ „	3.25	*Microdon*
12.9854	„ 24 „ „ . . . . . „ „	4.25	*Microdonte*
	Cover Glasses, Oblongs:		
12.9870	Size: 24 × 21 mm . . . . . per 100	3.25	*Mictuali*
12.9875	„ 32 × 24 „ . . . . . „ „	5.—	*Microfono*

The thickness of the cover-glasses ranges from 0.10 to 0.22 mm. Selected cover-glasses of a prescribed thickness are subject to prices which are one third in excess of those quoted above.

Particulars and Prices of Magnifiers, Dissecting Lenses, Dissecting Microscope Stands and Lens Holders will be found in our special booklet Mikro 188.

To meet the requirements of our customers we are prepared to obtain for hem from the best sources and at makers catalogue prices

Microtomes,
Cases of Dissecting Instruments,
Microscopic Objects

or any other appurtenance which they may require to supplement a microscope outfit purchased from us.

Completely Epuipped Microscopes.

In the following pages will be found a selection of Completely Equipped Microscopes for various purposes. Of the many possible combinations we have in each case selected a few which may be regarded as typical and which are most extensively used. Obviously, other combinations may be selected to suit the purchaser's predelections and according to the available means and other circumstances. The sets here specified should therefore be regarded as specimens and are in no sense intended to be looked upon as inflexible alternatives. In particular, the alternative selection of stands appended to each Set illustrates clearly to what extent it is possible to satisfy a great variety of requirements in this respect.

When Ordering according to the scheme here elaborated it is sufficient to specify the number of the required Set and its aggregate price or the Codeword, and, where it enters into the scheme, also the nature and voltage of the available electric current.

Complete Sets of Microscopes for the Inspection of Meat will be found in our booklet **Mikro 81.**

Set No. 1.

Simple Bacteriological Microscopes.

(Suitable for Medical Practitioners, Veterinariy Surgeons, etc.)

Achromatic Objectives:

A	D				
20.—	35.—	M. 55.—			Codeword
$\frac{1}{12}$" (oil-immersion), N. A. 1.25		„ 100.—			
Huyghenian **Eyepieces:**					
2, 4		„ 12.—			
Revolving Nosepieces, triple, No. 12.1203		„ 20.—			
100 Slides No. 12.9712		„ 2.80			
100 Cover-glasses No. 12.9818		„ 2.—	M. 191.80		

Alternative Selection of Stands:

a) **Stand IVC** No. 12.3042 and Condenser No. 11.4120	„ 225.—				
Packing	„ 2.50	„ 227.50	M.	**419.30**	*Microseism*
b) **Stand VI** No. 12.4010 with Illuminating Apparatus No. 11.4410	„ 150.—				
Packing	„ 2.—	„ 152.—	„	**343.80**	*Microgadus*
c) **Stand VBA** No. 12.3413 with Illuminating Apparatus No. 11.4310	„ 120.—				
Packing	„ 2.—	„ 122.—	„	**313.80**	*Microseris*
d) **Stand VB** No. 12.3512 with Illuminating Apparatus No. 11.4310	„ 100.—				
Packing	„ 2.—	„ 102.—	„	**293.80**	*Microgram*

Set No. 2.

Bacteriological Microscopes.

(Equipment for Laboratory Use, Medical Practitioners, Veterinary Surgeons.)

Achromatic Objectives:

AA	DD	with Corr. Collar				
30.—	70.—	. . . . .	M. 100.—			Codeword
1"/12	Fl. N. A. 1.30 (oil-immersion)	. . . .	„ 140.—			
Huyghenian **Eyepieces:**						
Nos. 2, 4	. . . . .		„ 12.—			
Micrometer Eyepiece H. 3. No. 11.5203	.		„ 16.—			
Revolving-Nosepiece, triple, No. 12.1203			„ 20.—			
Cover-glass Gauge No. 12.6500	. . . . .		„ 20.—			
200 Slides No. 12.9712	. . . . .		„ 5.60			
200 Cover-glasses No. 12.9818	. . . . .		„ 4.—	M. 317.60		
Paraboloid Condenser No. 11.4510 for dark ground illumination	. . . . .		„ 40.—			
Micro Nernst Lamp No. 13.9120	. . . . .		„ 40.—	„ 80.—		
Alternative Selection of Stands:						
a) **Stand III** E No. 12.2648 and Condenser No. 11.4130	. . . . .		„ 365.—			
		Packing	„ 3.50	„ 368.50	M. **766.10**	*Microsorex*
b) **Stand IV** CA No. 12.3043 and Condenser No. 11.4130	. . . . .		„ 240.—			
		Packing	„ 3.50	„ 243.50	„ **641.10**	*Microhm*

Set No. 3.

Bacteriological Microscopes.

(Equipments for Hospitals and Public Health Laboratories.)

Achromatic Objectives:

A	D			
20.—	35.—	. . . . .	M. 55.—	
Apochromatic Objectives:				
3 mm N. A. 0.95	2 mm N. A. 1.30	(oil-immersion)		
160.—	300.—	. . . . .	„ 460.—	
Huyghenian **Eyepieces:**				
Nos 2, 4	. . . . .		„ 12.—	
Compensating Eyepieces:				
Nos. 4	12			
20.—	30.—	. . . . .	„ 50.—	
Micrometer Eyepiece C. 6 No. 11.5406	. .		„ 30.—	
Revolving Nosepiece, triple, No. 11.1203	.		„ 20.—	
Cover-glass Gauge No. 12.6500	. . . .		„ 20.—	
		Carry forward	M. 647.—	

				Codeword
Brought forward		M. 647.—		
Paraboloid Condenser No. 12.4510 for dark ground illumination	M. 40.—			
Micro Nernst Lamp No. 13.9120	„ 40.—			
300 Slides No. 12.9712	„ 8.40			
300 Cover-glasses No. 12.9818	„ 6.—	„ 94.40		
Alternative Selection of Stands:				
a) **Stand I** B. No. 12.2048 with Condenser No. 11.4140	„ 435.—			
Packing	„ 3.50	„ 438.50	M. **1179.90**	*Microlabis*
b) **Stand III** D No. 12.2647 with Condenser No. 11.4130	„ 290.—			
Packing	„ 3.50	„ 293.50	„ **1034.90**	*Microlene*
c) **Stand IV** CA No. 12.3043 with Condenser No. 11.4130	„ 240.—			
Packing	„ 3.50	„ 243.50	„ **984.90**	*Microsome*

Set No. 4.

Simple Microscopes for Histological, Botanical and Zoological Work.

			Codeword
Achromatic Objectives:			
a_3 B E† 12.— 30.— 60.—	M. 102.—		
$\frac{1''}{12}$ N. A. 1.25 (oil-immersion)	„ 100.—		
Huyghenian **Eyepieces:**			
Nos. 1, 4	„ 12.—		
Micrometer Eyepiece No. 2, No. 11.5202 .	„ 16.—	M. 230.—	
Revolving Nosepiece, triple, No. 12.1203	„ 20.—		
Drawing Prism No. 12.6000	„ 21.—		
Drawing Board No. 12.6060	„ 2.50		
Stage Micrometer No. 12.6300	„ 10.—		
200 Slides No. 12.9712	„ 5.60		
200 Cover-glasses No. 12.9818	„ 4.—		
100 Cover-glasses No. 12.9818, selected for Objective E	„ 2.70	„ 65.80	
Alternative Selection of Stands:			
a) **Stand III** B No. 12.2632 with Condenser No. 11.4120	„ 235.—		
Packing	„ 3.50	„ 238.50	M. **534.30**	*Microlepte*
b) **Stand IV** CA No. 12.3043 with Condenser No. 11.4120	„ 235.—		
Packing	„ 3.50	„ 238.50	„ **534.30**	*Microlicia*
c) **Stand VI** No. 12.4010 with Illuminating Apparatus No. 11.4410 . .	„ 150.—		
Packing	„ 3.—	„ 153.—	„ **448.80**	*Microstome*
d) **Stand V** B No. 12.3512 with Illuminating Apparatus No. 11.4310 . .	„ 100.—		
Packing	„ 3.—	„ 103.—	„ **398.80**	*Microlites*

†) Objective E should be used exclusively with cover-glasses of selected thickness.

Set No. 5.

Microscopes for Histological, Botanical and Zoological Investigations.

Achromatic Objectives:

			Codeword
a* **a₂** **A** **C** **E** with Corr. Collar			
40.— 12.— 20.— 30.— 80.—	M. 182.—		
Pl (Water-immersion)	„ 20.—		
$\frac{1"}{12}$ Fl. N. A. 1.30 (oil-immersion)	„ 140.—		
Huyghenian Eyepieces:			
Nos. 2, 4	„ 12.—		
Micrometer Eyepiece No. 3, No. 11.5203 .	„ 16.—	M. 370.—	
Glass Vessel for the Plankton Searcher No. 12.8720	„ 3.50		
Revolving Nosepiece, triple, No. 12.1203 .	„ 20.—		
Drawing Camera No. 12.6011	„ 60.—		
Stage Micrometer No. 12.6300	„ 10.—		
Cover-glass Gauge No. 12.6500	„ 20.—		
Paraboloid Condenser No. 11.4510 for dark ground illumination	„ 40.—		
Micro Nernst Lamp No. 13.9120	„ 40.—		
300 Slides No. 12.9712	„ 8.40		
300 Cover-glasses No. 12.9818	„ 6.—	„ 207.90	
Alternative Selection of Stands:			
a) **Stand III D** No. 12.2647 with Condenser No. 11.4130	„ 290.—		
Packing	„ 3.50	„ 293.50 M. **871.40**	*Microlitic*
b) **Stand IV CB** No. 12.3044 with Condenser No. 11.4130	„ 253.—		
Packing	„ 3.50	„ 256.50 „ **834.40**	*Microlea*
c) **Stand IV C** No. 12.3042 with Condenser No. 11.4120	„ 225.—		
Packing	„ 3.50	„ 228.50 „ **806.40**	*Microvolt*
d) **Stand VI** No. 12.4010 with Illuminating Apparatus No. 11.4410 . .	„ 150.—		
Packing	„ 3.50	„ 153.50 „ **731.40**	*Micrologo*
e) **Stand V BA** No. 12.3413 with Illuminating Apparatus No. 11.4320 .	„ 126.—		
Packing	„ 3.50	„ 129.50 „ **707.40**	*Micrologue*

Set No. 6.

Microscopes for Histological, Botanical and Zoological Class Work

(also suitable for Pharmaceutical Examination Work).

Achromatic Objektives:

a₂ **A** **D**		
12.— 20.— 35.—	M. 67.—	
Huyghenian Eyepieces:		
Nos. 2, 4	„ 12.—	
Eyepiece Micrometer No. 11.5100	„ 5.—	M. 84.—
Carry forward		M. 84.—

			Codeword
Brought forward	M. 84.—		
Alternative Selection of Stands:			
a) **Stand V BA** No. 12.3413 with Cylinder Diaphragm No. 11.4100 . .	M. 100.—		
Packing	„ 1.50	„ 101.50	M. **185.50** *Micrologus*
b) **Stand V A** No. 12.3511	„ 80.—		
Packing	„ 1.50	„ 81.50	„ **165.50** *Micrology*
or (in the event of a Polarising Attachment being required)			
c) **Stand V D** No. 12.3585 with Illuminating Apparatus No.11.4310 . .	„ 158.—		
Packing	„ 1.80	„ 159.80	„ **243.80** *Microtheca*

Set No. 7.

Microscopes for Histological Investigations with Polarised Light.

			Codeword
Achromatic Objectives:			
a A DD†)			
12.— 20.— 50.—	M. 82.—		
$\frac{1"}{12}$ N. A. 1.25 (oil-immersion)	„ 100.—		
Huyghenian **Eyepieces:**			
Nos. 2, 4	„ 12.—		
Micrometer Eyepiece No. 3, No. 11.5203 .	„ 16.—		
Cover Glass Gauge No. 12.6500	„ 20.—		
200 Slides No. 12.9712	„ 5.60		
200 Cover-glasses No. 12.9818	„ 4.—		
100 Cover-glasses No. 12.9818, selected for Objective DD	„ 2.70	M. 242.30	
Alternative Selection of Stands:			
a) **Stand I A** No. 12.2047 with Condenser No. 11.4135	„ 350.—		
Polarising Attachment No. 12.7881 with **Selenite Films** No. 12.7901 .	„ 61.—		
Packing	„ 3.—	„ 414.—	M. **656.30** *Microthere*
b) **Stand III CB** No. 12.2644 with Condenser No. 12.4120	„ 273.—		
Polarising Attachment No. 12.7860 and **Selenite Films** No. 12.7901 .	„ 44.—		
Packing	„ 3.—	„ 320.—	„ **562.30** *Micromeghe*
c) **Stand IV F** No. 12.3085 with Condenser No. 12.4120	„ 295.—		
Packing	„ 3.—	„ 298.—	„ **540.30** *Microtoena*
d) **Stand V D** No. 12.3485 with Illuminating Apparatus No. 11.4310 . .	„ 168.—		
Packing	„ 2.50	„ 170.50	„ **412.80** *Micromelus*

†) Objective **DD** (without correction collar) should be used exclusively with cover-glasses of selected thickness.

Set No. 8.

Microscopes for Chemical Laboratories, Breweries and Dairies.

Achromatic Objectives:

a_2	A	D				Codeword
12.—	20.—	35.—	. . . . .	M. 67.—		
$\frac{1''}{12}$ N. A. 1.25 (oil-immersion)				„ 100.—		

Huyghenian Eyepieces:

Nos. 2, 4	„ 12.—		
Micrometer Eyepiece H. 3 No. 11.5203 . .	„ 16.—	M. 195.—	
Revolving Nosepiece, triple, No. 12.1203 .	„ 20.—		
Stage Micrometer No. 12.6300	„ 10.—		
Counting Chamber No. 12.6600	„ 14.—		
200 Slides No. 12.9712	„ 5.60		
200 Cover-glasses No. 12.9818	„ 4.—	„ 53.60	

Alternative Selection of Stands:

a) **Stand IIIE** No. 12.2648 with Condenser No. 11.4120	„ 360.—			
Polarising Attachment No. 12.7880 and **Selenite Films** No. 12.7901 . .	„ 44.—			
Packing	„ 2.50	„ 406.50	M. **655.10**	*Micromere*
b) **Stand IVF** No. 12.3085 with Condenser No. 11.4120	„ 295.—			
Packing	„ 2.50	„ 297.50	„ **546.10**	*Micromeria*
c) **Stand VD** No. 12.3485 with Illuminating Apparatus No. 11.4310 . .	„ 168.—			
Packing	„ 2.—	„ 170.—	„ **418.60**	*Micromerie*

or without Polarising Attachment

d) **Stand IIICA** No. 12.2643 with Condenser No. 11.4120	„ 260.—			
Packing	„ 2.50	„ 262.50	„ **511.10**	*Microzoal*
e) **Stand IVC** No. 12.3042 with Condenser No. 11.4120	„ 225.—			
Packing	„ 2.50	„ 227.50	„ **476.10**	*Microzoary*
f) **Stand VBA** No. 12.3413 with Illuminating Apparatus No. 11.4310 .	„ 120.—			
Packing	„ 2.—	„ 122.—	„ **370.60**	*Microzone*

Set No. 9.

Simple Microscopes for Class Laboratories, Paper Mills and Cellulose Works.

Achromatic Objectives:

A	C	E†				
20.—	30.—	60.—	M. 110.—			Codeword

Huyghenian **Eyepieces:**

Nos 2, 4	„ 12.—		
Micrometer Eyepiece H. 3 No. 11.5203	„ 16.—	M. 138.—	
Revolving Nosepiece, triple, No. 12.1203	„ 20.—		
Counting Chamber No. 12.6600	„ 14.—		
200 Slides No. 12.9712	„ 5.60		
100 Cover-glasses No. 12.9818	„ 2.—		
100 Cover-glasses No. 12.9818, selected for Objective E	„ 2.70	„ 44.30	
Alternative Selection of Stands			
a) **Stand IV** CB No. 12.3044 with Condenser No. 11.4120	„ 248.—		
Polarising Attachment No. 12.7880 and **Selenite Films** No. 12.7091	„ 44.—		
Packing	„ 2.50	„ 294.50	M. **476.80** *Microzooid*
b) **Stand V** D No. 12.3585 with Illuminating Apparatus No. 11.4310	„ 158.—		
Packing	„ 2.—	„ 160.—	„ **342.30** *Micrommate*
or without Polarising Attachment			
c) **Stand IV** BA No. 12.3033 with Condenser No. 11.4120	„ 220.—		
Packing	„ 2.50	„ 222.50	„ **404.80** *Micromys*
d) **Stand V** B No. 12.3412 with Illuminating Apparatus No. 11.4310	„ 110.—		
Packing	„ 2.—	„ 112.—	„ **294.30** *Microneme*

Set No. 10.

Microscopes for Excise Examination of Fibres etc.

Achromatic Objectives:

a	A	D		
12.—	20.—	35.—	M. 67.—	

Huyghenian **Eyepieces:**

Nos. 2, 4	„ 12.—	
Micrometer Eyepiece H. 3 No. 11.5203	„ 16.—	M. 95.—
Carry forward		M. 95.—

†) Objective E (without Correction Collar) should be used exclusively with cover-glasses of selected thickness.

Brought forward M. 95.— Codeword

Alternative Selection of Stands:

a) **Stand V** D. No. 12.3585 with Illuminating Apparatus No. 11.4310 . M. 158.—
Packing „ 1.50 „ 159.50 M. **254.50** *Micronisi*

b) **Stand V** A No. 12.3511 . . . . . „ 80.—
Packing „ 1.50 „ 81.50 „ **176.50** *Micronisus*

Set No. 11.

Simple Microscopes for Examining Opaque Objects, Specimens of Metals etc.

Achromatic Objectives:

a_2 A C Codeword
12.— 20.— 30.— . . . . . M. 62.—

Huyghenian Eyepieces:
Nos. 2, 4 . . . . . „ 12.— M. 74.—

Vertical Illuminator No. 12.0400 . . . . . „ 18.—
Illuminating Lamp No. 13.8200 . . . . . „ 37.— „ 55.—

Alternative Selection of Stands:

a) **Stand V** A No. 12.3511 . . . . . „ 80.—
Packing „ 1.50 „ 81.50 M. **210.50** *Micronymy*

b) **Stand IX** No. 12.4410 . . . . . „ 50.—
Packing „ 1.50 „ 51.50 „ **180.50** *Microonte*

For more pretentious requirements we supply special equipments for metallographic investigations. Particulars of these will be furnished on application.

Complete Microscope Equipments for all Histological, Bacteriological, Botanical and Zoological Investigations of the Usual Order, including the more or less Indispensable Accessories only.

Set No. 12.

Achromatic Objectives:

a a_2 AA C DD F
with Correction Collar
40.— 12.— 30.— 30.— 70.— 95.— . . . . . M. 277.—

P1 D* (Water-immersion)
20.— 75.— . . . . . „ 95.—

$\frac{1''}{12}$ N. A. 1.30 (oil-immersion) . . . . . „ 140.—

Huyghenian Eyepieces:
Nos. 1, 2, 4, 5 . . . . . „ 24.—
Micrometer Eyepiece H. 3. No. 11.5203 . „ 16.— M. 552.—

Carry forward „ 552.—

			Codeword
Brought forward		M. 552.—	
Paraboloid Condenser No. 11.4510	M. 40.—		
Glass Cell for Plankton Searcher No. 12.8720	„ 3.50		
Revolving Nosepiece, quadruple, No. 12.1204	„ 25.—		
Drawing Apparatus No. 12.6011	„ 60.—		
Drawing-Stage No. 12.6055	„ 45.—		
Stage-Micrometer No. 12.6300	„ 10.—		
Counting Chamber No. 12.6600	„ 14.—		
Cover-glass Gauge No. 12.6500	„ 20.—		
Micro Nernst Lamp No. 13.9120	„ 40.—		
400 Slides No. 12.9712	„ 11.20		
400 Cover-glasses No. 12.9818	„ 8.—	„ 276.70	M. **828.70** *Microp e*

Alternative Selection of Stands:

a) **Stand I A** No. 12.2047 with Condenser No. 11.4130	„ 325.—		
Polarising Attachment No. 12.7880 and **Selenite Films** No. 12.7901 .	„ 44.—		
Packing	„ 6.—	„ 375.—	„ **1203.70** *Microperca*
b) **Stand III CB** No. 12.2644 with Condenser No. 11.4130	„ 278.—		
Polarising Attachment No. 12.7880 and **Selenite Films** No. 12.7901 .	„ 44.—		
Packing	„ 6.—	„ 328.—	„ **1156.70** *Micropeze*
c) **Stand IV F** No. 12.3085 with Condenser No. 11.4120	„ 295.—		
Packing	„ 6.—	„ 301.—	„ **1129.70** *Microphon*

or without Polarising Attachment

d) **Stand III CA** No. 12.2643 with Condenser No. 11.4130	„ 265.—		
Packing	„ 6.—	„ 271.—	„ **1099.70** *Microzoon*
e) **Stand IV C** No. 12.3042 with Condenser No. 11.4120	„ 225.—		
Packing	„ 6.—	„ 231.—	„ **1059.70** *Microphony*

Set No. 13.

Apochromatic Objectives:

16 mm	8 mm	4 mm	
N. A. 0.30	N. A. 0.65	N. A. 0.95	
80.—	100.—	140.—	M. 320.—
2 mm N. A. 1.30	(oil-immersion)		„ 300.—

Compensating Eyepieces:

Nos. 2	4	8	12		
20.—	20.—	30.—	30.—	„ 100.—	
Micrometer Eyepiece C. 6 No. 11.5406 .				„ 30.—	M. 750.—
				Carry forward	„ 750.—

			Codeword
Brought forward		M. 750.—	
Paraboloid Condenser No. 11.4510 for dark ground illumination	M. 40.—		
Tube Slide No. 12.1210	„ 8.—		
4 Objective Slides No. 12.1211	„ 32.—		
Case for 6 Objective Slides No. 12.1416 .	„ 15.—		
Drawing Apparatus No. 12.6012	„ 72.—		
Drawing Stage No. 12.6050	„ 52.—		
Stage Micrometer No. 12.6300	„ 10.—		
Haemacytometer No. 12.6604	„ 27.—		
Micro Nernst Lamp No. 13.9120	„ 40.—		
Cover-glass Gauge No. 12.6500	„ 20.—		
500 Slides No. 12.9712.	„ 14.—		
500 Cover-glasses No. 12.9818	„ 10.—	„ 340.—	
Alternative Selection of Stands:			
a) **Stand I B** No. 12.2048 with Condenser No. 11.4130	„ 400.—		
Polarising Attachment No. 12.7881 and **Selenite Films** No. 12.7901 .	„ 61.—		
Packing	„ 6.—	„ 467.—	M. **1557.**— *Microphyle*
b) **Stand III D** No. 12.2647 with Condenser No. 11.4130	„ 290.—		
Polarising Attachment No. 12.7880 and **Selenite Films** No. 12.7901 .	„ 44.—		
Packing	„ 6.—	„ 340.—	„ **1430.**— *Micrure*
or without Polarising Attachment			
c) **Stand I A** No. 12.2047 with Condenser No. 11.4140	„ 360.—		
Packing	„ 6.—	„ 366.—	„ **1456.**— *Microple*
d) **Stand III CA** No. 12.2643 with Condenser No. 11.4130	„ 265.—		
Packing	„ 6.—	„ 271.—	„ **1361.**— *Micropoda*

Binocular and Monocular Erecting Microscopes.

Set No. 14.

Simple Binocular Microscopes.

			Codeword
Paired Objectives: (a_0) (a_2) 45.— 45.—	M. 90.—		
Paired Eyepieces: Nos. 2, 4	„ 24.—	M. 114.—	
Alternative Selection of Stands:			
a) **Stand X A** No. 12.5040	„ 195.—		
Packing	„ 2.—	„ 197.—	M. **311.**— *Mictibus*
b) **Stand X B** No. 12.5090	„ 160.—		
Packing	„ 3.50	„ 163.50	„ **277.50** *Micropora*

Set No. 15.
Binocular Microscopes.

Paired Objectives:

(55)	(a_0)	(a_2)	(a_3)	(Pl)				
45.—	45.—	45.—	45.—	55.—	. . . . .	M. 235.—		Codeword

Paired Eyepieces:

Nos. 2, 3, 4 . . . . . „ 36.—

Glass Cell for Plankton Searcher No. 12.8720 „ 3.50 M. 274.50

Alternative Selection of Stands:

a) **Stand X A** No. 12.5040 . . . . . „ 195.—
Prism Rotator No. 12.8702 . . . „ 75.—
Capillary Rotator No. 12.8710 with 20 capillaries . . . . . „ 51.—
Packing „ 3.— „ 324.— M. **598.50** *Micropore*

b) **Stand X B** No. 12.5070. . . . . „ 260.—
Dissecting Stage No. 12.4918 . . „ 40.—
Packing „ 4.50 „ 304.50 „ **579.**— *Microporos*

c) **Foot and Stage Portion of Stand X A** with straight upright No. 124930 and Body Tube of Stand X B, in case . . . . . „ 202.—
Frame of Stand X B No. 12.5090 . „ 38.—
Prism Rotator No. 12.8702 . . . „ 75.—
Capillary Rotator No. 12.8710 with 20 capillaries . . . . . „ 51.—
Dissecting Stage No. 12.4918 . . „ 40.—
Packing „ 5.— „ 411.— „ **685.50** *Microps*

Set No. 16.
Monocular Dissecting Microscopes.

Stand XI No. 12.5310 . . . . . M. 140.— Codeword

Alternative Optical Equipments:

a) **Achromatic Objectives:**

55 mm	a*	A	C		
15.—	40.—	20.—	30.—	.	M. 105.—

Huyghenian Eyepieces:
Nos. 2, 4 . . . . . „ 12.— „ 117.—

Revolving Nosepieces, triple, No. 12.1203 . . . . . „ 20.—
Drawing Apparatus No. 12.6012 . „ 72.—
Packing „ 2.50 „ 94.50 M. **351.50** *Micropsie*

or

b) **Achromatic Objectives:**

55 mm	a_3		
15.—	12.—	. . . . .	„ 27.—

Huyghenian Eyepieces:
Nos. 2. 4 . . . . . „ 12.—
Packing „ 2.— „ 41.— „ **181.**— *Mictidae*

Index

	Page
ABBE illuminating apparatus	27—28
Achromatic Objectives	20—22
Analysers	94
Analyser Eyepieces	95
Apertometers	92
Aperture, numerical	12
Apochromatic Objectives	13—16
Aquarium Microscope	71
Arc Lamp	109
Bell Shades	111
Binocular Stands	68—73
Blood Corpuscle Counting Apparatus	91
Born and Peter's Orientation Plate	106
Bottle for Immersion-Oil	11
Breath Shield	106
Burner, Tinol	108
Camera lucida	78, 79
Capillary Rotator	105
Cardioid Ultra-Microscope	36
Cases for Objectives and Eyepieces	19
Cases for Objective Slides	51
Cases for Stands	76—77
Cedarwood-oil for Immersion	11
Centre Stops	33—35
Centring Devices for Condensers	30, 31
„ for Objectives	30, 106
Chambers, moist	111
Circles, graduated glass	89
Compensating Eyepieces	17—19
Condensers, achromatic	30
„ aplanatic	29
„ for dark-ground illumination	33—36
„ ordinary	29, 31, 32
„ Quartz	30—31
„ swing-out	29
Cooling Trough, ZOTH's	100
Correction Collar for Objectives	10, 21
Counting Apparatus	90, 91
Counting Chamber	91
Cover-glasses	105, 112
Cover-glass Gauge	8, 10, 48
Cover-glass Dial Gauge	10, 90
Cross-line Micrometer	90, 91
Cross-ruled Eyepiece	103
Cylinder Diaphragms	28, 32
Dark-ground Illumination	32—36
Dark-ground Illumination for a large field of view	36
Dark-ground Stops	33—35
Depths, discrimination of	12
Depth of focus	12
Dermatoscope	70
DETTO's Slide Bar	44
Diaphragm Carrier	28, 55
Diffraction Apparatus	93
Diffraction Plate	93
Dissecting Implements	65, 112
Dissecting Instruments	112

	Page
Dissecting Microscopes Binoculars	68—73, 122, 123
„ Monocular	73, 123
„ Stages	73
„ Stands	73, 75, 78
Divided Circles	89
Drawing Apparatus, ABBE	78—81
„ „ for horizontal instruments	81
„ Board	79, 83
„ Prism	79
„ Stand, GILTSCH's	83
„ Stages	82
Draw-tube	10, 48
Drum with PORRO Prisms	102
EHRLICH Stops	90
Engraved Name Plates	77
Erecting Microscopes:	
Binocular	68—73, 122, 123
Monocular	74—75, 123
Erecting Prism	102
Eyepieces:	
Analyser	95
Compensating	17—19
Cross-ruled	103
Focussing	85, 90, 103
Goniometer	87
Huyghenian	23, 24
with Large Field of View	23
Orthoscopic	23, 24
Pointer	102
for Special Purposes	101—103
Eyepiece Cross-line Micrometer	90
„ Micrometer	84
„ Screw Micrometer	86
Field of View, area of object seen in the	15, 16, 22, 26
Finder, MALTWOOD's	45, 106
Finders fitted to mechanical stages	41, 43
Fluorescence, Observation of	31
Fluorite Objectives	7, 22
Focus, Depth of	12
Focussing Eyepieces	85, 90, 103
Focussing Mechanisms	46—48
Gas-heated Condenser	100
Gas Lamp, Incandescent	107, 110
Glass Cell for Plankton Searcher	21
Glass Bell Shades	111
Glass Plate Bases	111
Goniometer Eyepieces	87
Haemacytometers	91
Hageh Microscope Lamp	107
Hand Microscope	67
Hand-regulating Arc Lamp	109
Heating Chambers	99
Heating Plate, GUTMANN's	100
Heating Stages	100
Huyghenian Eyepieces	23—24
Illuminating Apparatus, ABBE	31—32
Illuminating Arrangement, GREIL's	73
Ditto with Glow-lamps	70, 73
Illuminators for small stands	31, 32
Immersion Condenser	29, 33
Immersion-Fluid	11
Immersion-oil Bottle	11
Iris Cylinder Diaphragms	28, 31, 32
Iris Diaphragms	28, 31, 32
Leather Cases	65, 77
Luminescence Microscope	30, 105
Magnification:	
Initial Magnification of Objectives	14—15
Eyepiece Magnification	18, 24
Magnifications, Table of for Achromatic Objectives and Huyghenian Eyepieces	25
for Apochromatic Objectives and Compensating Eyepieces	24

	Page
Magnifications,	
for High Power Achromatic Objectives and Compensating Eyepieces	26
for Paired Objectives and Eyepieces	26
MALTWOOD's Finder	45, 106
Meat Inspector's Microscope	113
Mechanical Stage, Large	41
„ „ Simplified	39
„ „ Small	43
Metal Name Plates	77
Mica Films	96
Micro Burner	99
Micrometer Drum Eyepieces	86, 102
Micrometer Eyepieces	85
Micrometer Movement	46
Micro Nernst Lamp	108
Microscope Lamps	107—110
Microscope Stages	100
Microscopes, Complete	
for Elementary Class Work	116
for Apothecaries (Pharmaceutical Classes)	116
for Bacteriological Investigations	113, 114
for Breweries	118
for Chemical Laboratories	118, 119
for Dairies	118
for Dissectiing	122, 123
for Excise Examinations	119
for Histological, Botanical and Zoological Investigations	115, 116, 117, 120, 121
for the Examination of Opaque Objects	120
for Metallographic Work	120
Microscopic Objects	112
Micro Spectroscope	97
Micro-spectroscopic Objective	97
Microtomes	112
Moist Chambers	111
Mounted Objects for the microscope	112

	Page
Name Plates	77
Nernst Lamps	108
Numerical Aperture	12
Objects for the Microscope	112
Object Stages	100
Objective Changers	49—51
Objectives:	
Achromatic	20—23
Apochromatic	13—16
for Stands XI	75
Paired, for binocular microscopes	23
Object Markers	106
Object Slides	105, 111
Orientation Plate	106
Paraboloid Condenser	34
Paraboloid Stops	35
Photo-micrographic Stage	42
Plankton Condenser	36
Plankton Searcher	21
Pointer Eyepieces	102
Polarisers	94, 95
Polarising Attachments	92—96
Prism, Erecting	102
Prism Rotator	104
Prisms, PORRO's, drum pattern	102
Quartz Condensers	30, 31
Resolving Power of Objectives	12
Revolving Nosepieces	49, 50
Revolving Stages	40—42, 45
Rules	89
Selenite Films	96
Slide Bar, DETTO's	44
Slides	105, 111
Sliding Objective Changers	49—51
Slit Stop	34
Spectroscopic Eyepiece	97
Spectrum Polariser	97

	Page
Stability of Objectives	16
Stages	39—45
Stage Cross-line Micrometer	91
Stage Micrometers	87, 88
Stage Screw Micrometer	88
Stage, Heating	100
Stands:	
Large	52
Medium Sized	57
Small	61
for Photo-micrography and Projection	52
Binocular	68
Erecting Microscope	68, 74
Stereoscopic Camera	73
Stereoscopic Eyepieces	101
Stops, EHRLICH's	90
Substage Illuminator for small stands	31, 32
Tables of Magnifications, see Magnifications.	
Test Plate	10, 93
Thermo-regulator	99
Thicknesses, Measurement of —, by means of the micrometer screw	48
Tinol Burner	108
Travelling Microscope	63—65
Tube-length	8, 37, 49,
Turntable	106
Ultra Microscopes	36
Ultra-microscopy	32
Vertical Illuminators	37—38
Vulcanite Stage, revolving	41, 42, 76
Water Immersion Lenses	15, 21, 22, 23
Working Distance, Free	8, 14, 15, 22, 26

MÉDIATHÈQUE La Villette