e

CARL ZEISS

ULTRAPHOT II

Operating Instructions

ULTRAPHOT II

INSTRUCTIONS

Contents

	Page
Description	3
The Camera	7
The Microscope	20
The Illuminating Apparatus	31
Instrument Table	37
General Operating Instructions	40
Attaching the separately packed parts	42
Adjusting the light sources	51
Checking the automatic exposure device	56
Calibration the automatic exposure device	58
Working with Transmitted Light	61
Compound Microscope	62
Simple Microscope	66
Working with Incident Light	72
Compound Microscope	77
Simple Microscope	81
Photographing with the 9×12 cm Camera	85
ULTRAPHOT II as Polarising Microscope	89
Fluorescence Microscopy	91
Maintenance and Handling	92

Description

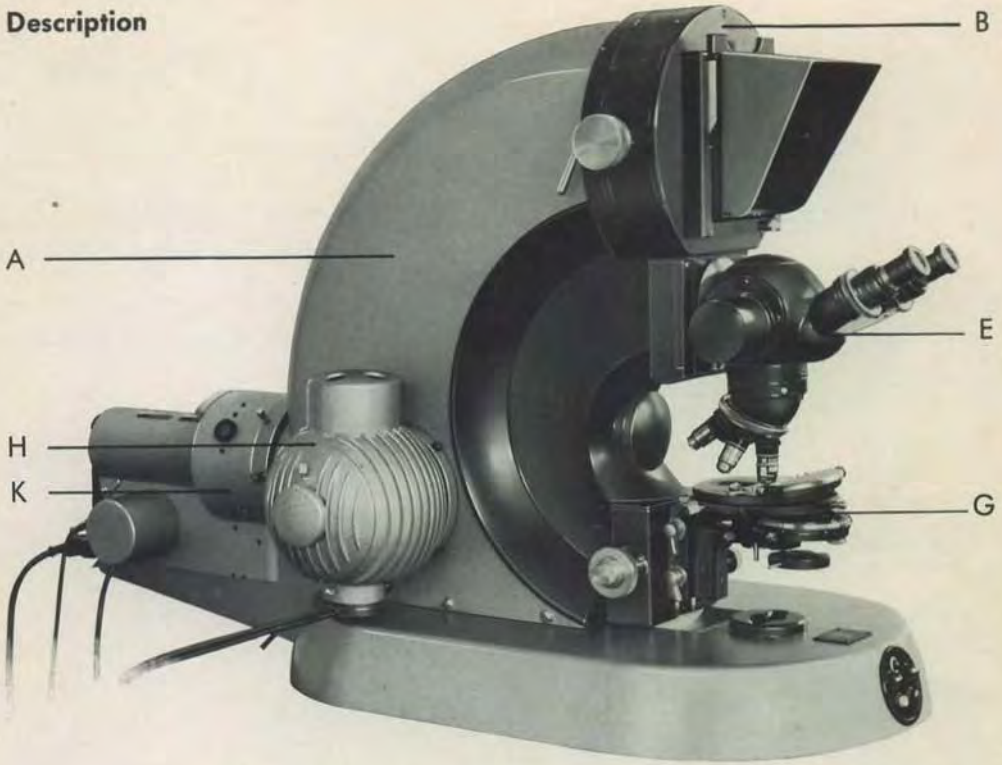

1

The Camera Microscope ULTRAPHOT II consists of various components which in part are interchangeable. This results in an exceptional versatility. The component parts of the apparatus are (Fig. 1):

A Stand
B 9×12 cm. (4×5") Photo Head, interchangeable with
C 35 mm. Photo Head, or
D Projection Head
E Tube Head, interchangeable with
F Luminar Head (for low-power photographs)
G Stage group with substage for transmitted light
H Illuminator for low-voltage filament bulb 12 V 100 W, or for high-pressure mercury lamp HBO 200
K Carbon Arc Lamp
L Instrument Table

A

Path of Rays in the Compound Microscope

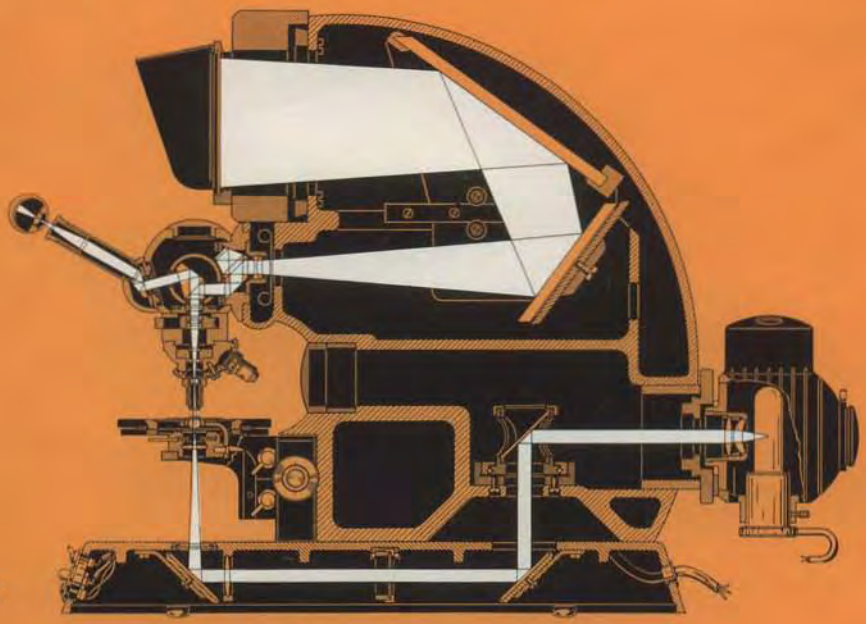

2

Transmitted Illumination

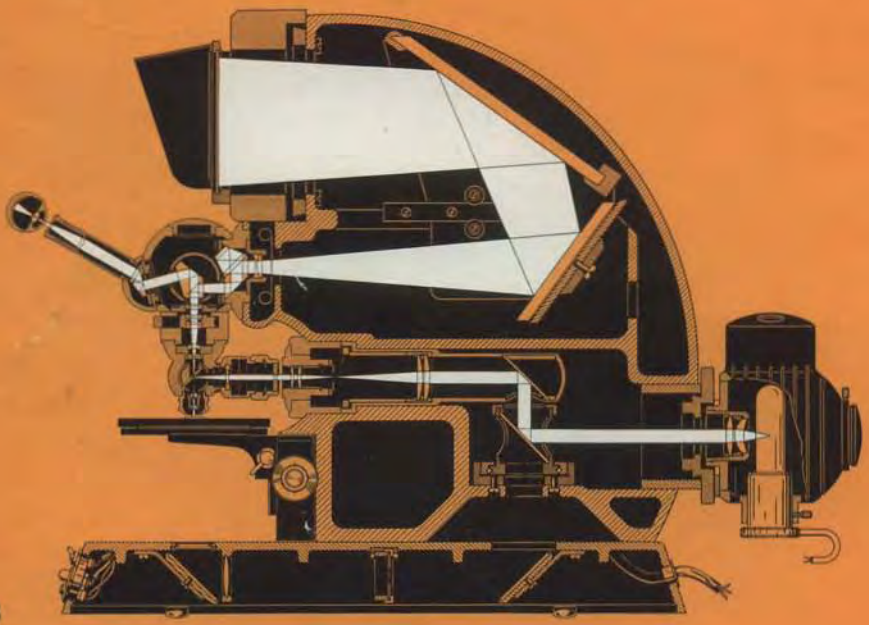

3

Incident Illumination

A

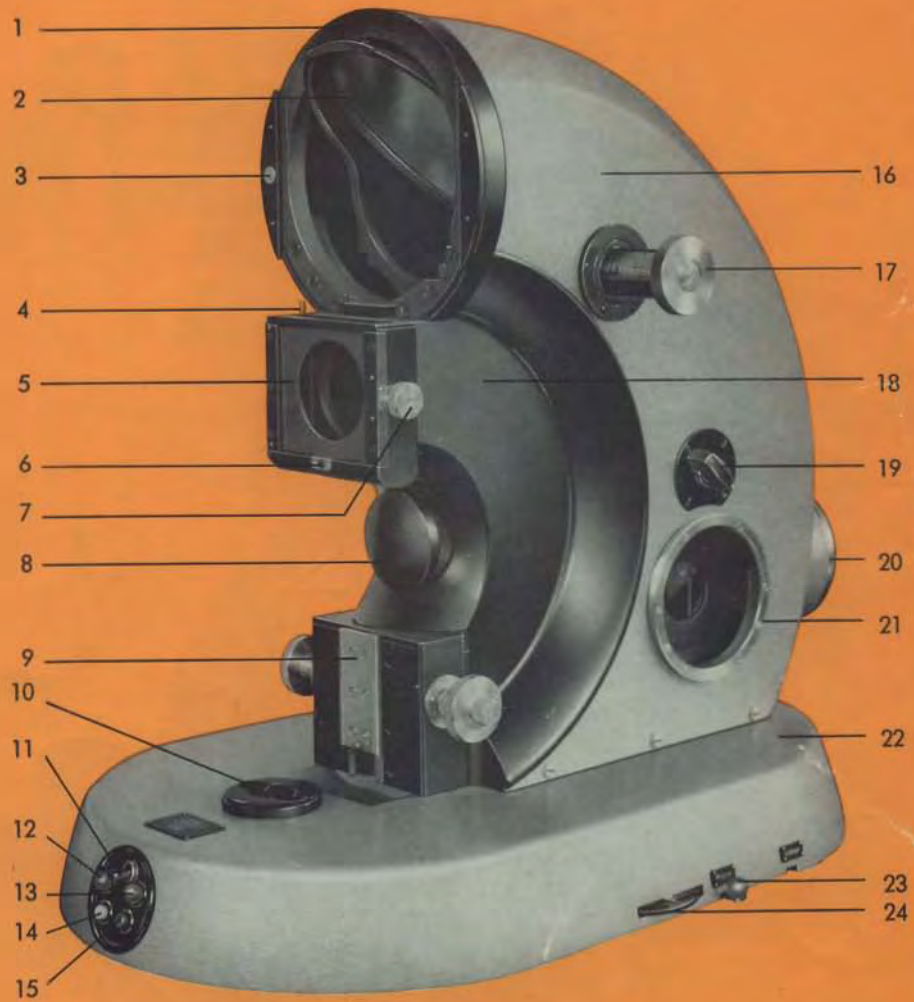

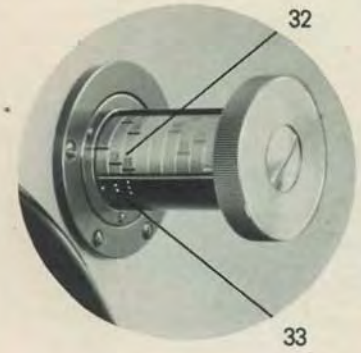

1 Attachment device for the Photo Heads
2 Mirror carriage
3 Clamping strip for the Photo Heads
4 Locking pin
5 Attachment device for the Tube Heads
6 Stop for the Tube Heads
7 Clamping screw for the Tube Heads
8 Cover for the light exit in epi-illumination
9 Clamping strip for stage and condenser carriers
10 Filter holder
11 Main switch of the automatic exposure device
12 Pilot lamp, lights up when main switch is turned on
13 Pilot lamp, lights up as long as shutter is electrically opened

4

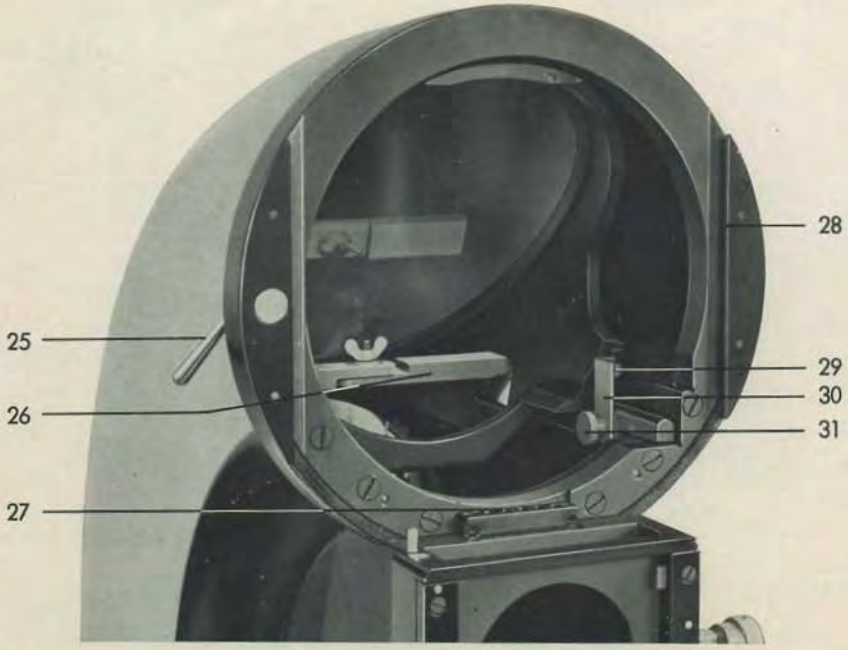

14 Push button for electric hand control
15 Push button for automatic control of the camera shutter
16 Metal cover for carrier of Tube Head, stage and substage
17 Knob for adjusting extension of the camera
18 Carrier for Tube Head, stage and substage
19 Setting knob for illuminators
20, 21 Ring dovetails, holders for the illuminators
22 Base
23 Switching lever for changing from illumination for Compound Microscope (position "Micro") to illumination for LUMINARS (position "Luminar")
24 Operating disk for the diaphragm (Luminous-field diaphragm at "Micro", aperture diaphragm at "Luminar")
25 Lever for clamping the Photo Heads
26 Provision for disengagement of the mirror carriage
27 Plug board for electric connection between stand and Photo Head
28 Guiding edge for the Photo Head
29 Fastening screw of retaining angle bar (A 30)
30 Retaining angle bar for supporting the mirror carriage during transportation
31 Fastening screw of (A 30)
32 Rings for adjusting the scales of magnification
33 Red reference points for Optovar positions 1.25, 1.6, and 2

A Stand (Fig. 4)

The Carrier (A 18), mainly made of cast iron parts, is rigidly mounted to the box-shaped Base (A 22). This rests with four shock-reducing rubber feet on the surface supporting the instrument. It contains a part of the illuminating system for transmitted light (Fig. 2 and 3). The Carrier is partly enclosed by a metal cover (A 16). In the upper part of its interior it contains the camera space and in the lower the remainder of the parts for transillumination as well as the system for epi-illumination. On the outside of the metal cover, at its lower end, are three ring dovetails (A 20 and A 21), for attachment of the light sources; the third, opposite (A 21), is not visible in the illustration.
In addition, the Carrier and metal cover carry mounting devices
(A 1) for the Photo Heads
(A 5) for the Tube- or Luminar Heads, and
(A 9) on the pinion box: for stages and condensers for transillumination

Table 1

Magnifications on the focusing screen (B 7) **with the Compound Microscope**
Valid for ULTRAPHOT II as of serial No. 55 016 (excepting 6-place numbers).

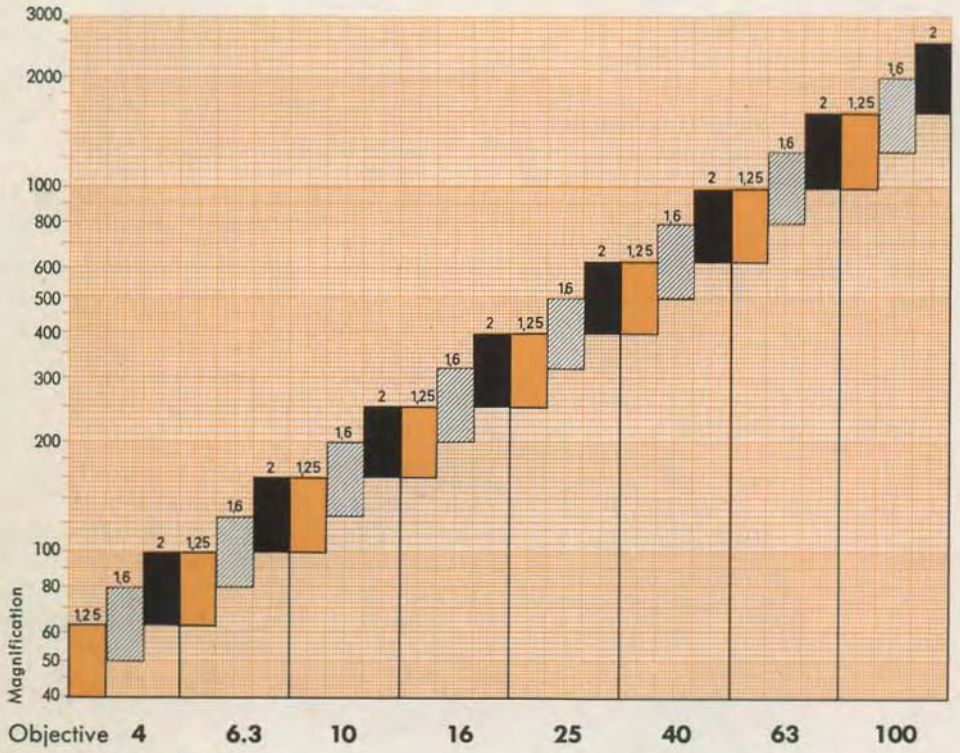

The table shows the magnifications obtainable with the combination of individual objectives and the three positions of the OPTOVAR (E 18).

Factor 1.25 = colored field
Factor 1.6 = hatched field
Factor 2 = black field

The Camera

The upper part of the interior of the carrier with metal cover constitutes the camera. The image is projected, by means of two mirrors (Fig. 2 and 3) upon the focusing screen (B 7) mounted in the front wall of the instrument above the Tube Head. The camera length is changed by horizontally displacing the mirrors. Both of them rest on a mirror carriage (A 2) which can be adjusted by a knob (A 17) extending laterally from the cover wall. Through this adjustment the camera length can be doubled. An advantage of the arrangement is that with relatively small dimensions a considerable variation in camera length is achieved. The range with the Compound Microscope is 50 to 80 cm., for survey photographs with the Simple Microscope 80 to 110 cm.

On the shaft of knob (A 17) for setting the camera length are placed interchangeable rings (A 32) which bear marks for the rapid setting of specific magnifications. The respective marks must lie in contact with the lower edge of the window, like the third ring (A 32), in Fig. 4. There are three such rings for the Compound Microscope. They are distinguished by black numbers. There is one for each of the three positions of the OPTOVAR (E 18). The relation is given by 1, 2, or 3 red dots (A 33) which correspond to the dots appearing under the factor numbers of the OPTOVAR (E 20).

The numbers engraved on the rings indicate the factor by which the objective magnification must be multiplied in order to obtain the magnification on the focusing screen (B 7).

Example:
Planachromat 40/0.65 is employed. The OPTOVAR is set on 1.6 (2 red dots). After focusing the image on the focusing screen, the camera factor 15 is indicated by the corresponding ring. Total magnification on the focusing screen 40×15× = 600×.

A separate ring is provided for each of the five LUMINARS employed for low power photographs (Simple Microscope). The correlation between ring and LUMINAR is indicated by the same color of the engraving. The numbers engraved on the rings directly indicate the magnification on the focusing screen (Table 11, page 67). An additional ring with millimeter graduation is provided for cases in which such an unequivocal correlation cannot be determined beforehand. With this scale an optional table of magnifications can be set up.

B

5

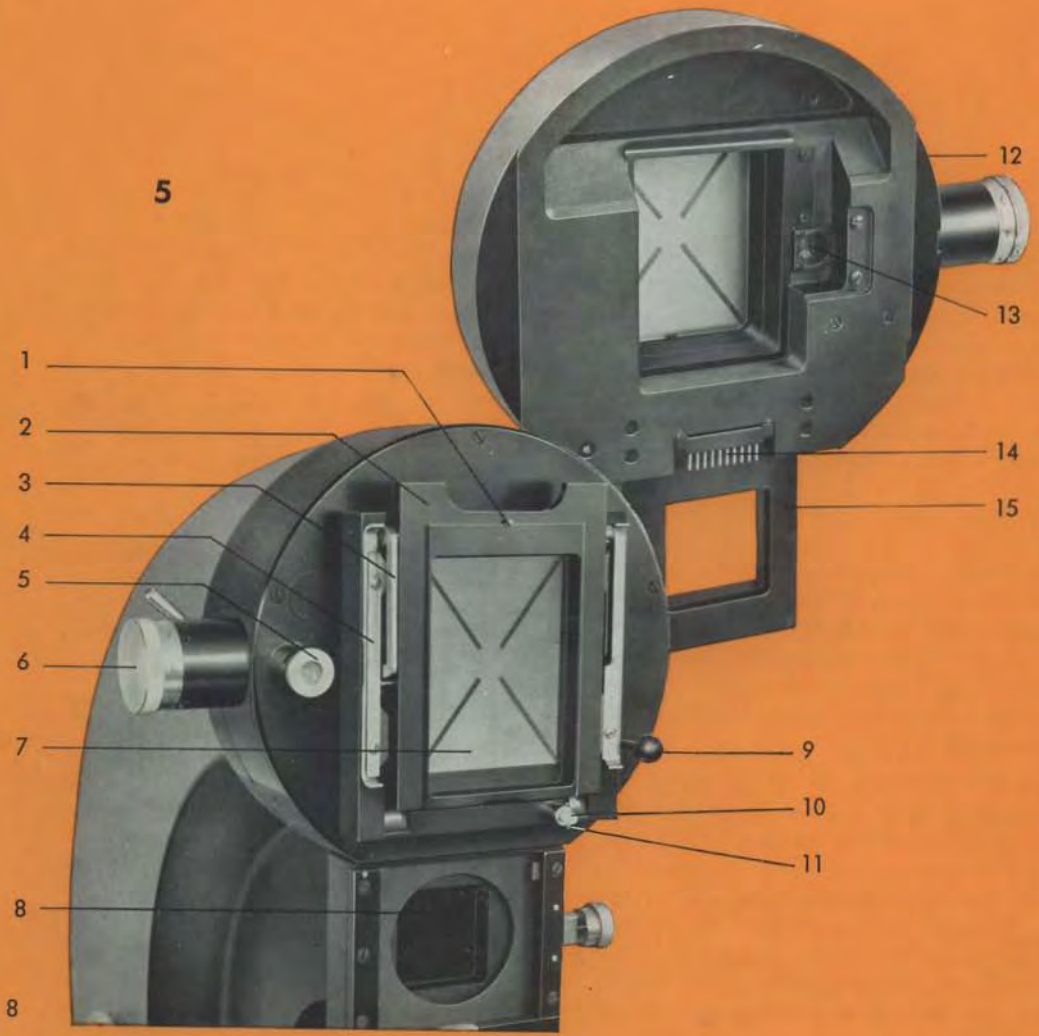

9 x 12 cm. (4 x 5") Photo Head

1 Retaining knob for the light-excluding hood (here removed) of the focusing screen. The hood is set on this knob and pressed downwards

2 Frame of the focusing screen holding the ground-glass plate

3 Retaining clip of the focusing screen frame

4 Bolt for attaching a roll film or sheet film holder or a "Polaroid holder"

5 Dry cartridge with silica gel. If the contents are no longer blue, the cartridge is unscrewed and dried on a moderately warm heating plate until the dark blue color is restored

6 Selector knob for the sensitivity of the employed emulsion. The longest exposures are obtained with position "I", the shortest with position "8"

7 Focusing screen with clear diagonal strips

8 Shutter opening

9 Lever for opening and cocking the focal-plane shutter by hand. For cocking and closing the shutter by hand (p. 56, section 7) or by inserting the plate holder (p. 86, sections 10 and 11) the knob for mechanical release of the shutter (B 10) must not be in the depressed position.

10 Knob for mechanical release of the shutter. When pressed halfway in, the knob catches, the shutter remains open; pressed completely in, the knob passes the catch and the shutter remains open for as long as the knob is pressed

11 Release knob for the lock of the winding lever operated by the plate or film holder. This lock arrests the lever when a film pack or roll film magazine or a Polaroid holder is used

12 Contact face of the Photo Head

13 Window of yellow glass; behind it lies the photocell for automatic control of exposure

14 Terminal strip for electric connection between Photo Head and stand

15 Shutter housing

B 9x12 cm. Photo Head (for USA 4x5")

The Photo Head is attached to the upper end of the instrument. It carries the devices for focusing the image and for receiving the holders containing the film material. In its basic form it is designed for 9×12 cm. or 4×5" holders. The change from one size to the other is made by transposing the guide bars (page 52).

The interior of the Photo Head houses the essential part of the device for automatic exposure control and the shutter mechanism. After taking off the Tube Head (E) and after loosening clamping lever (A 25), the Photo Head can be removed from the instrument by pulling it upwards. In its place a simple Projection Head (Fig. 8) or a 35 mm. Photo Head (Fig. 6) can be inserted.

In taking a photograph, the image is focused on the focusing screen (B 7) located immediately above the Tube Head. It is a ground-glass plate provided with diagonal clear strips. The focusing screen need not be removed from the instrument when inserting a plate or film holder.

The holder is introduced from above between housing and frame (B 2) of the focusing screen. In so doing the frame springs back so that the plane of the photographic emulsion lies in the plane occupied by the ground glass during focusing. When introduced the holder depresses a lever (334, page 53) which automatically closes and cocks the shutter. This necessarily must be open while focusing the image. The arrange-

ment avoids errors in manipulation, such as leaving the shutter open when removing the holder, or double exposures.

The holder should be introduced gently to avoid shock which could alter the plane of focus. Lever (B 9) at the right of the focusing screen serves for opening and cocking the shutter by hand. Knob (B 10) at the right and below the focusing screen is a hand release of the shutter for time exposures. When the knob is pushed halfway in, to the catch, the shutter remains open, but when pressed completely in and released, the shutter closes.

In the interior of the Photo Head, to the left of the focusing screen, is a photocell (B 13). It determines the brightness of the image through a window, closed by a yellow filter, facing the camera space. The correct exposure is automatically adjusted in accordance with the reaction of the photocell by an electronic control device located partly in the Photo Head beside the photocell, and partly in the interior of the base.

A prerequisite, naturally, is correct adjustment of the automatic device to the sensitivity of the film material employed. The procedure is described on page 58 and carried out with the aid of knob (B 6) having a scale for 8 sensitivity steps.

C

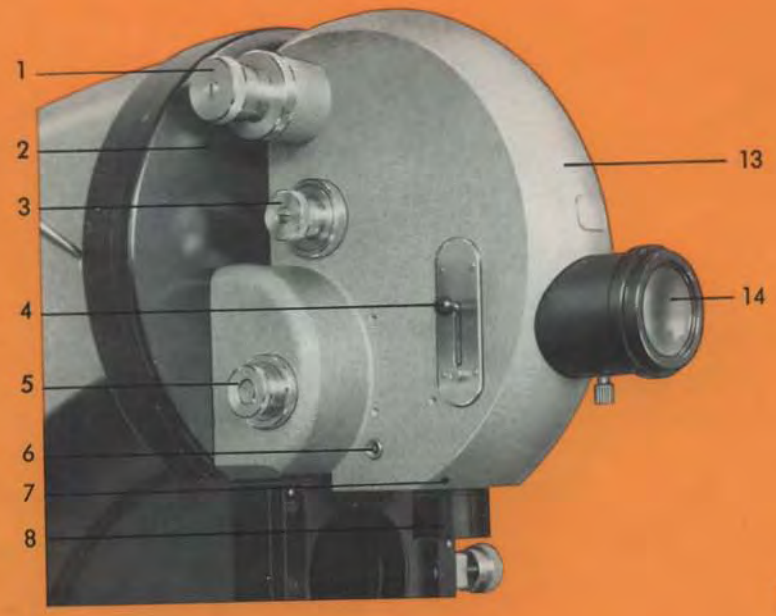

6

C

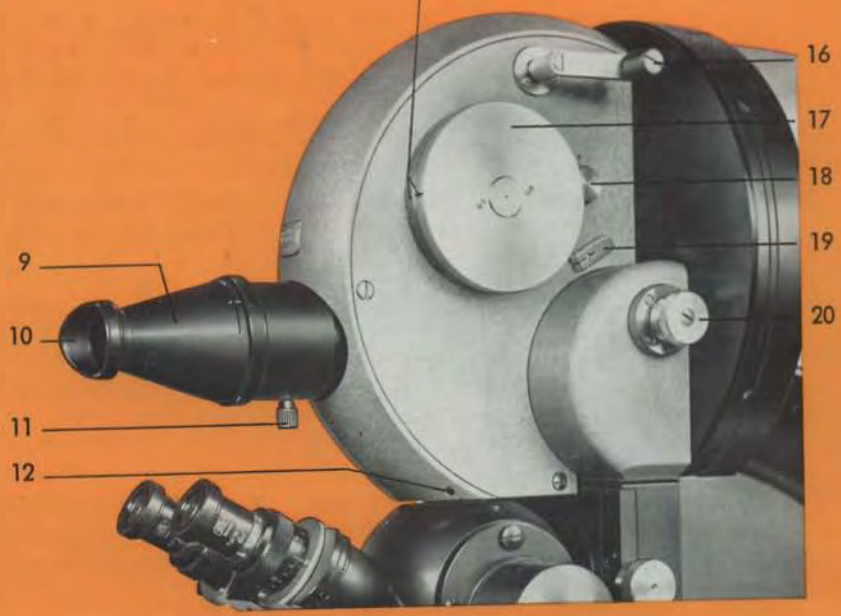

12

35 mm. Photo Head

1 Knob for mechanical shutter release
The shutter stays open as long as the knob is depressed; in that position it can be locked by giving it a half turn. The shutter remains open until the lock is released.

2 Base plate

3 Knob for adjusting the shutter speed. It is set on "B" for automatic exposures. To change the setting, the knob is pulled out to a stop and turned until the desired shutter speed lies beside the mark into which the knob snaps upon release

4 Knob for changing between clear disk with cross lines and ground-glass disk

5 Dry cartridge with silica gel

6 Synchronizing contact for flash exposures

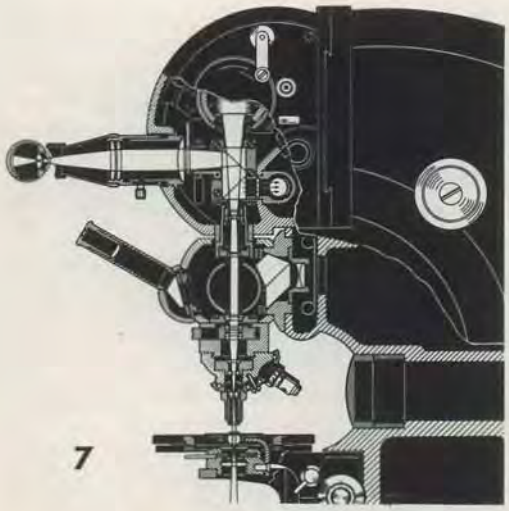

7

7 Centering screw for projective (should **not** be manipulated by the user)

8 Projective

9 Light-excluding sleeve in front of the focusing eyepiece

10 Eyecup

11 Screw for clamping the focusing eyepiece (C 14) in the correct position for the observer's eye

12 Same as (C 7)

13 Housing

14 Focusing eyepiece without light-excluding sleeve. The eyepiece has a very high exit pupil in order to facilitate observation when passing from observation through the binocular tube. The light-excluding sleeve (C 9) should be attached if difficulty is experienced in locating the exit pupil.

15 **Green** marks on cassette and ring, to lie opposite one another when inserting the cassette

16 Handle for the film winding mechanism

17 Cassette

18 Film counting device. After inserting the cassette, set the number disk on 35 and make two blank exposures by pressing knob (A 14) or (C 1)

19 Lever for opening the light-excluding flap installed in the observation eyepiece for the purpose of preventing the entrance of stray light, during an exposure, through the eyepiece. It is opened if long exposures require checking of the focus. As far as possible this should be done with attached light-excluding sleeve

20 Selector knob for sensitivity of the film material

C 35 mm. Photo Head

ULTRAPHOT II is designed primarily for photography with relatively large film sizes. However, frequently it is desirable also to use 35 mm. film. This can be accomplished by means of the well-known Attachment Camera equipped for the use of 35 mm. film. After releasing screw (E 13), the cover (E 12) can be removed from the Tube Head (E 1). A vertical tube is inserted in its place, carrying in its lower end lens 47 30 94. An Attachment Camera is mounted on the tube, and photographs can be taken on 35 mm. film as with any compound microscope. Directions are given in the instructions for the Attachment Camera (G 40–415).

C

Table 2
Magnification with the 35 mm. Photo Head

Objective	Projective 3.2× with **OPTOVAR** in position		
	1.25× total factor 4×	**1.6×** total factor 5×	**2×** total factor 6.3×
1	4×	5 ×	6.3×
2.5	10×	12.5×	16 ×
4	16×	20 ×	25 ×
6.3	25×	32 ×	40 ×
10	40×	50 ×	63 ×
16	63×	80 ×	100 ×
25	100×	125 ×	160 ×
40	160×	200 ×	250 ×
63	250×	320 ×	400 ×
100	400×	500 ×	630 ×

The requirements for 35 mm. photomicrography are met in a more complete manner by the 35 mm. Photo Head (Fig. 6). It is equipped with automatic exposure device and automatic film advance. This instrument is mounted in place of the 9×12 cm. (4×5") Photo Head on the carrier of ULTRAPHOT II. Before doing so, the cover (E 12) is removed from the Tube Head (E 1). The Projective (C 8), attached in a centering mount at the lower end of the 35 mm. Photo Head, extends into the opening of the Tube Head.

The intermediate (air) image formed by the combination of microscope objective and OPTOVAR is projected by the Projective on the film at a further magnification of 3.2×. The total magnifications obtained with the various combinations are shown in table 2.

Switch on the photoelectric cell diaphragm by setting the ring around the drying cartridge (C 5) to position "1" which should usually remain switched in at position "2". Only if calibration photographs show that the change of the exposure obtainable with the selector switch (C 20) is too coarse by the factor 2, intermediate steps are possible by switching to **position "1".** This may occasionally be desirable for colour photographs. With the selector switch (C 20) in the same position **the exposure time will be increased by the factor 1.5 approx.**

The 35 mm. Photo Head can be used only in conjunction with the Tube Head (E 1). It cannot be used with the Luminar Head (F 1) for taking low-power photographs.

A beam-splitting system (Fig. 7) is mounted above the Projective (C 8). It sends approximately ⅓ of the light to the film, ⅓ to the photocell, and the remainder to the focusing disk. The focusing eyepiece (C 14) serves for observation of the focusing disk at an increased magnification. Before its use, after loosening screw (C 11), the focus of the eyepiece is first adjusted so that the plane of the disk appears sharp to the eye of the observer. The exit pupil lies very high, so that it is possible to easily pass from observation through the inclined binocular tube of the microscope to focusing of the image in the focusing eyepiece. If there is difficulty in locating the exit pupil, the light-excluding sleeve (C 9) should be attached. A clear-glass and a ground-glass disk are provided for focusing. One or the other is brought into the path of rays by moving knob (C 4) up and down.

The film is contained in a drum-shaped cassette (C 17) and introduced into the housing of the 35 mm. Photo Head so that the **green** line on the knurled ring of the cassette lies beside the **green** mark (C 15). By turning right to a stop the cassette is locked in position, opened, and coupled with the mechanism for automatic film advance. Lever (C 16) serves for winding the spring of this mechanism.

A focal-plane shutter is employed. Shutter speeds for mechanical release are adjusted with knob (C 3). To change the speed, the knob is pulled out to a stop, turned until the desired number lies beside the fixed mark, and then allowed to snap in.

For hand operation the shutter is released either by pressing the white knob (A 14) on the base of the instrument or knob (C 1) of the camera. For time exposures the shutter is set on B, for instantaneous shots on the time selected (10 = 1/10 sec., 25 = 1/25 sec., 50 = 1/50 sec., 100 = 1/100 sec.).

If 35 mm. photomicrographs are to be made with automatic control of exposure, shutter knob (C 3) is set on B and selector knob (C 20) on the film sensitivity. Correct adjustment of the selector knob cannot be made on the basis of the film sensitivity supplied by the manufacturer. Instead, before beginning work with the apparatus, it is necessary to make a series of test exposures (page 58) on the film which is to be employed.

D

C

D

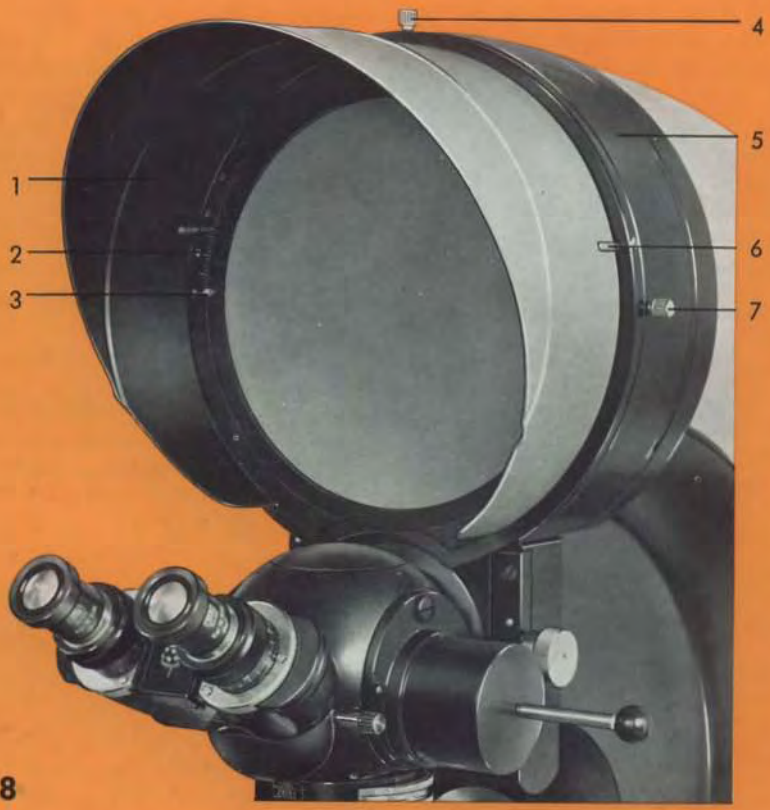

8

1 Hood
2 Scale for reading the angle of rotation
3 Handle for rotating the projection screen
4 Clamping screw for the projection screen
5 Housing
6 Fastening pin for the hood
7 Clamping screw for fastening the projection screen to the housing

Projection Head

The Projection Head consists essentially of a housing (D 5) which serves as holder for a projection screen. This rests in a rotating mount having a scale on its periphery (D 2). If angles are to be measured with the device, it is a simple matter for the user to draw suitable lines on the projection screen with a sharp hard lead pencil.

The size of the image on the projection screen, having a diameter of 190 mm., is the same as on the focusing screen (B 7) of the 9×12 cm. Photo Head. Hence the magnifications given in table 1 (page 6), 11 (page 67), and 12 (page 75) also apply to the Projection Head.

To calculate the diameter of the maximum object area which can be imaged at a given magnification on the projection screen, it is necessary only to divide its diameter of 190 mm. by the magnification.

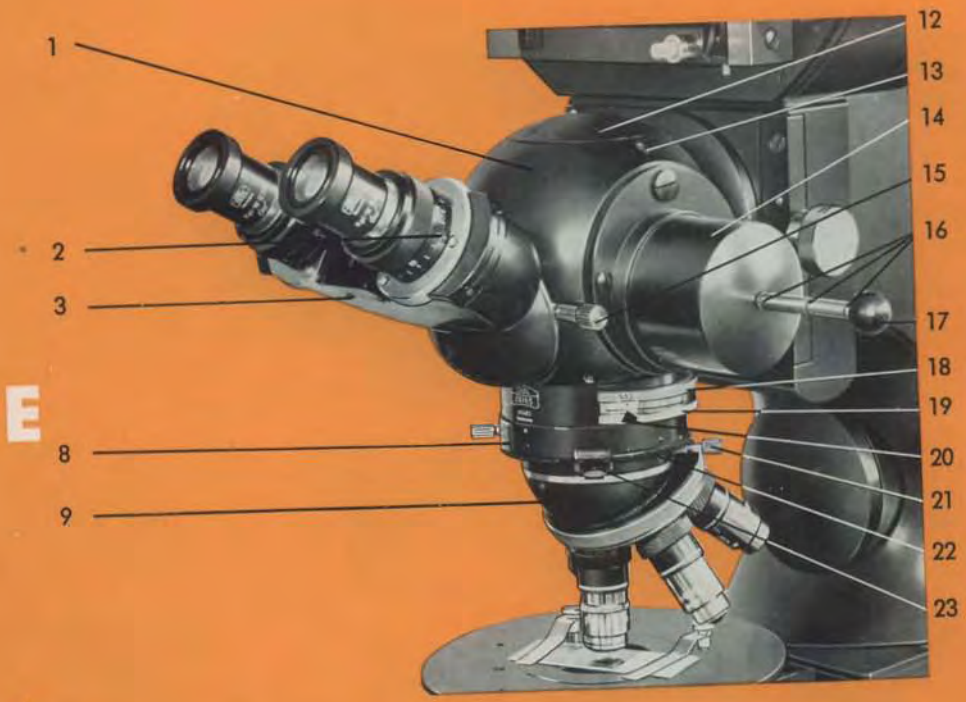

E

E

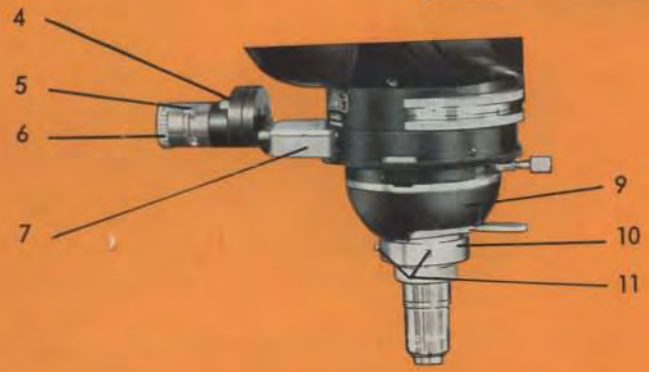

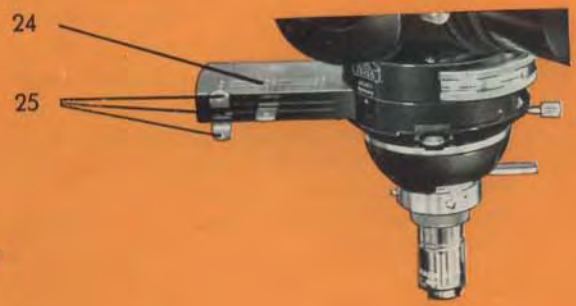

9

Tube Head

1 Spherical housing
2 Scale on the eyepiece sleeve for correction of the tube length after adjustment of the interpupillary distance
3 Inclined binocular tube
4 Revolution counter on the analyzer slide
5 Clamp
6 Knob with scale for rotation of the analyzer
7 Analyzer slide
8 Closing piece of the slot for the analyzer slide
9 Objective changers; above: revolving nosepiece, below: holder for single objectives on centering change ring (E 10)
10 Centering change ring for single objectives, recommended if more than five objectives are used
11 Centering screws with the two accompanying watch keys
12 Cover
13 Clamping screw of the cover
14 Cylindrical guide tube for the beam-splitting slide
15 Clamp for the tube (E 3)
16 Colored ring marks for position of the beam-splitting slide (Table 4, page 22)
17 Rod with spherical knob for shifting the beam-splitting slide
18 Milled ring for switching the OPTOVAR systems (Table 3, page 20)
19 Milled ring for focusing the auxiliary microscope
20 Marking points
21 Clamping screw of the objective changer
22 Closing piece for the opening for insertion of compensators
23 Opening for insertion of compensators
24 Barrier-filter inset
25 Handles for switching the barrier filters in and out

E Tube Head

All imaging parts of the Microscope are assembled in or attached to the Tube Head. It constitutes the Microscope in the stricter sense.

The housing (E 1) of this Tube Head is of spherical shape. It is connected to the carrier by means of a quick-change device in form of a plate bevelled at its sides like a dovetail (page 50). Suitable cutouts of the bevelled sides permit it to be easily hooked into the carrier, where it is clamped in position with clamping screw (A 7).

The spherical housing continues below in a cylindrical attachment in which the magnification changer OPTOVAR (E 18) is installed. It contains systems supplying magnifications of 1.25×, 1.6×, 2×, and also a system "Ph" for observing the exit pupil of the objective.

Table 3
Magnifications when observing with eyepiece 8×

Objective	OPTOVAR		
	1.25 total factor 10×	**1.6** total factor 12.5×	**2** total factor 16×
	Red marking points (E 20)		
	•	::	:::
1	10×	12.5×	16×
2.5	25×	32 ×	40×
4	40×	50 ×	63×
6.3	63×	80 ×	100×
10	100×	125 ×	160×
16	160×	200 ×	250×
25	250×	320 ×	400×
40	400×	500 ×	630×
63	630×	800 ×	1000×
100	1000×	1250 ×	1600×

Only the eyepieces supplied by us for this instrument are used for observation:

Kpl eyepiece 8× Cat. No. 46 39 20
and
Kpl eyepiece 8× for eyeglass wearers Cat. No. 46 39 22
Each has a field of view number of 18

The systems are successively brought into the path of rays by turning the upper knurled ring (E 18). System "Ph" is required for phase contrast and for microscopy with polarized light. The phase rings in the objectives are focused by turning the lower knurled ring (E 19).

Table 3 presents the magnifications obtainable in observations with our objectives in combination with eyepiece 8×.

An analyzer for microscopy in polarized light can be inserted (page 89) in an opening in the Tube Head which normally is occupied by a closing piece (E 8).

Below and at right angles to the opening (E 8) for the analyzer slide is a slot (E 23) for insertion of a quartz plate, a quartz wedge, or other compensators. The slot should always be kept closed, in instruments with serial numbers up to 55015 by means of the ring (E 22), in more recent instruments with a closing piece.

In fluorescence microscopy the same slot (E 23) also serves for insertion of barrier filters mounted on suitable sliders. Recently a "barrier filter inset" (E 24) was made available which permits convenient exchange and combination of different barrier filters. It contains three sliders, which are switched in and out by means of handles (E 25). Each slider has two barrier filters and one clear opening. This device can be used on ULTRAPHOT II having serial numbers beginning with 55 016 (excepting 6-place numbers).

The lower end of the cylindrical attachment to the Tube Head is developed as a changing device for objective holders (E 9). In instruments up to serial number 55 015 it is a ring dovetail with three-point contact; in instruments of higher serial number a dovetail slide.

The objective holder usally is a ball-bearing revolving nosepiece for five objectives. If a larger number of objectives is in frequent use, or if the objectives are to be individually centered, special holders are preferable which accommodate a single objective screwed into a centering change ring (E 10).

In Tube Heads of recent construction the revolving nosepiece is inserted from left rear to right front into the dovetail slide of the Tube Head. Holders for individual objectives and for the vertical illuminator are inserted from right front to left rear. The inserted holder must have good contact with the stop and be secured with knurled screw (E 21).

Inclined binocular tube (E 3) serves for visual observation. It is fastened with knurled screw (E 15). The interpupillary distance is adjusted by moving the eyepiece sleeves (E 2).

After adjusting the interpupillary distance and reading off its value, the eyepiece sleeves are screwed out to the extent that the reading on their scales agrees with the interpupillary distance. Failure to do so impairs parfocality of the objectives on the revolving nosepiece.

A slide carrying the beam-splitting system travels in the horizontal guide tube (E 14) of the Tube Head. With the rod (E 17) it can be arrested in four positions marked by catches. Each position of the reflecting system is indicated by

one of four colored rings on the rod. Table 4 gives a survey of the different functions.

The beam deflected to the camera in position II or III first traverses an additional prism system which raises the optical axis of the Microscope to the height of the optical axis of the camera passing through the counter of the spherical housing (E 1). Directly behind this prism is the Projective. It is a negative system with image-flattening effect. Its exchange is unnecessary. The required variation of magnification (Table 1, page 6) is effected with the OPTOVAR (E 18) and through appropriate adjustment of the camera length. The focal-plane shutter of the camera lies close behind the Projective.

For attaching the Tube Head see page 50.

Table 4
Beam-splitting slide (E 17)

Position	I	II	III	IV
Ring color	White	Red	Black	Colorless
Function	The total light flux is conducted into the observation tube for visual observation. This is especially important for the examination of images having low brightness (dark field or fluorescence microscopy).	About 1/3 of the light flux serves for observation, the other 2/3 are conducted to the photographic emulsion in the camera. The preferred position for photomicrography (this position is shown in Fig. 2 and 3).	The total light flux is directed into the camera. Thereby the exposure time is greatly reduced if images of low brightness have to be photographed.	The total light flux passes through the Tube Head without deflection. After removing cover (E 12) the image can be received in the 35 mm. Photo Head or in a tube inserted for projection instead of the Photo Head.

F Luminar Head and Accessories

The size of the openings in the Tube Head does not suffice for low-power photographs with LUMINARS (Simple Microscope). Therefore a special Luminar Head (F 1) must be used for this purpose. It contains two front-surface mirrors, the changing device (F 4) for attaching the Head to the carrier, and on the lower side a three-point changer (F 3) for attaching the LUMINARS.

LUMINAR 2.5–5 (F 41) and the LUMINAR with a focal length of f = 100 mm. (F 31) are attached with their dovetails directly to the Luminar Head. For the others, due to their great differences in focal length, it is necessary to interpose holders differing in height, namely

a low holder 47 25 52 (F 21) for LUMINAR f = 63 mm. (F 22), and

a high holder 47 25 51 (F 11) for LUMINAR f = 16, 25, and 40 mm. (F 12).



F

10

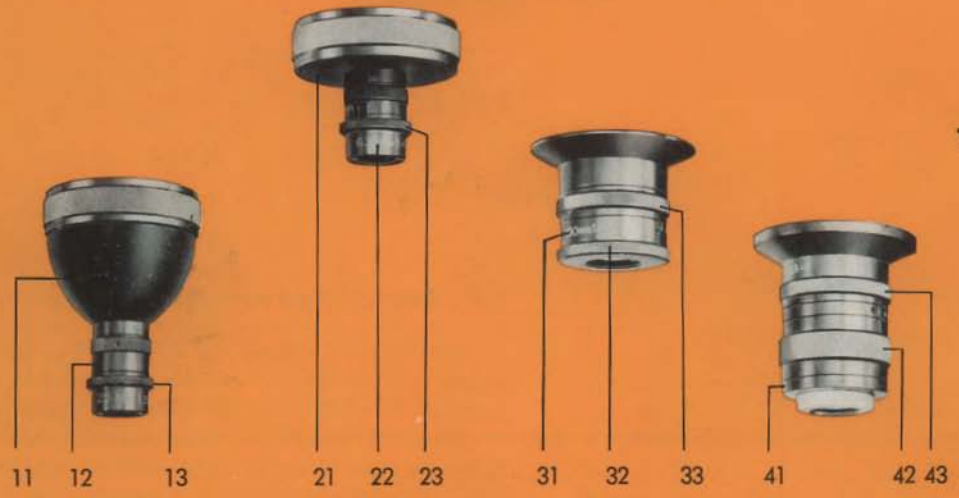

E

F

Luminar Head

1 Luminar Head
2 Clamping screw
3 Contact points for ring dovetail of the Luminar holder
4 Changing device for attaching the Luminar Head to the carrier

11 Luminar holder for LUMINARS 16, 25, and 40 mm.
12 LUMINAR
13 Knurled ring for operating the iris diaphragm

21 Luminar holder for LUMINAR 63 mm.
22 LUMINAR 63 mm.
23 Knurled ring for operating the iris diaphragm
31 LUMINAR 100 mm.
32 Cap ring covering the thread for attachment of the survey illuminator (F 75)
33 Knurled ring for operating the iris diaphragm
41 LUMINAR 2.5–5
42 Knurled ring for focusing the image
43 Knurled ring for operating the iris diaphragm

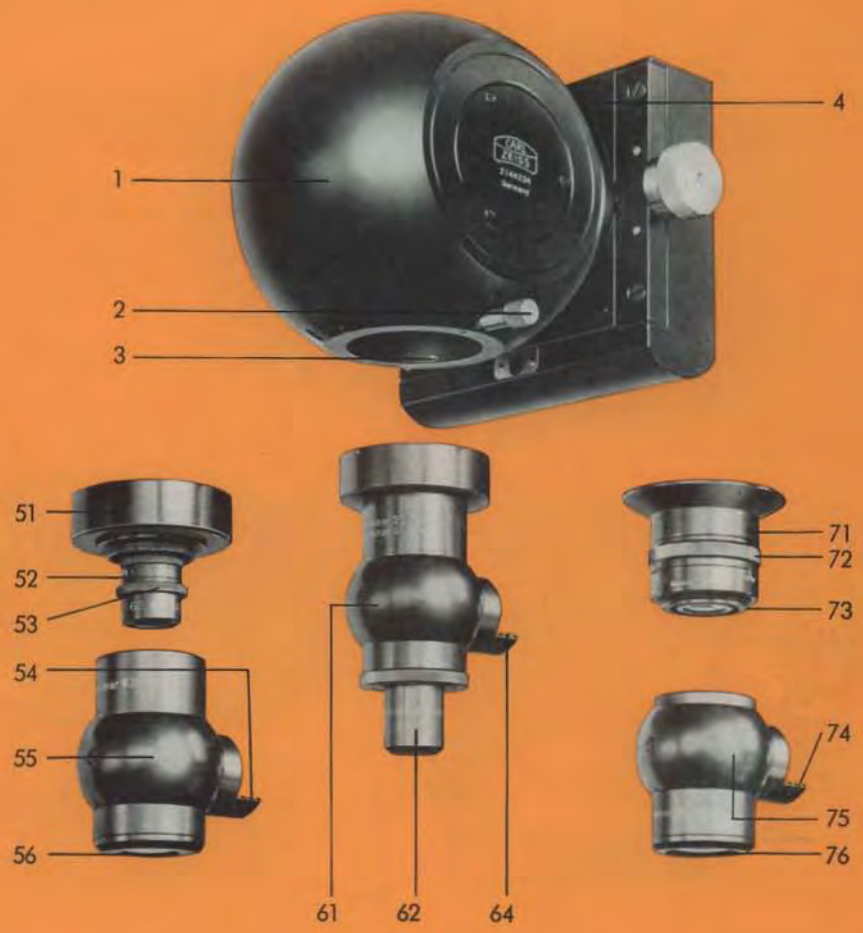

51 Holder for survey illuminator for LUMINAR 63 mm.
52 LUMINAR 63 mm; corresponds to (F 22)
53 Knurled ring for operating the iris diaphragm **(here basically to be set on scale line 2)**
54 Filter holder
55 Survey illuminator for LUMINAR 63 mm.
56 Field lens

61 Survey illuminator for Epi-LUMINARS 20, 25, and 40 mm.
62 Epi-LUMINAR 40 mm.
64 Filter holder

71 LUMINAR 100 mm; corresponds to (F 31)
72 Knurled ring for operating the iris diaphragm; corresponds to (F 33) **(here basically to be set on scale line 2)**
73 The thread for attaching the survey illuminator (F 75) is exposed after unscrewing the cap ring (F 32)
74 Filter holder
75 Survey illuminator for LUMINAR 100 mm.
76 Field lens

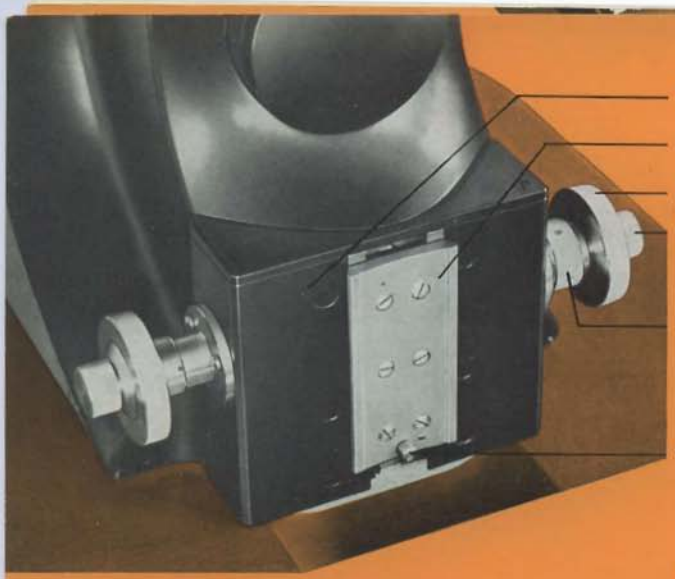

G



11



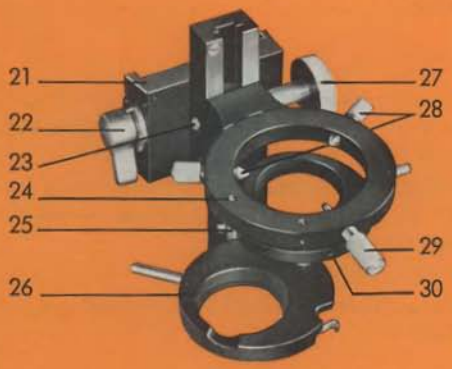

Pinion Box

1 Housing
2 Clamping plate to which stage and condenser carriers are fastened
3 Coarse adjustment knob
4 Fine adjustment knob
5 Brake for coarse adjustment
6 Stop for condenser carrier

Stage carrier with centering piece

11 Stage carrier
12 Centering screws for centering the stage
13 Clamping lever for clamping the stage carrier to the clamping strip (G 2)
14 Centering piece
15 Spring bolt

G

Condenser carrier with rack and pinion

21 Attachment piece with dovetail slide
22 Lever for clamping the condenser carrier to the clamping plate (G 2)
23 Screw for regulating the tension of the pinion movement
24 Condenser carrier

Circular rotating and centering mechanical stage

41 Screw for clamping stage rotation
42 Circular rotating and centering mechanical stage
43 Microscope slide holder
44 Stage plate, moved by knob (G 49)
45 Inset diaphragm

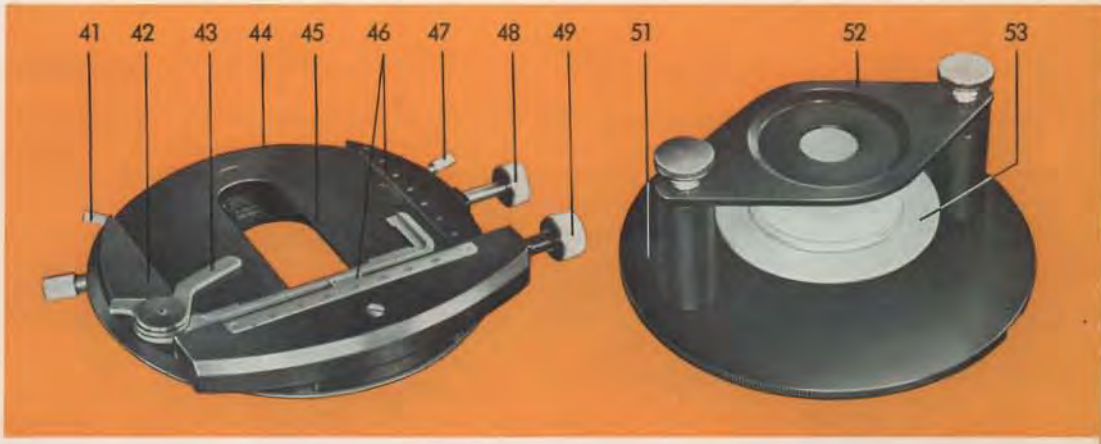

25 Stop for the filter holders
26 Filter holders, swung out
27 Pinion head for height adjustment of the condenser
28 Centering screws for centering the condenser
29 Spring bolt
30 Filter holder, swung in

Rotating and centering gliding stage

31 Screw for clamping stage rotation
32 Inset diaphragm
33 Stage clips
34 Holes for attaching a mechanical stage
35 Stage plate, movable directly by hand in a horizontal plane

46 Verniers
47 Knob for regulating the stiffness of the forward-backward movement
48 Pinion head for moving the microscope slide forward-backward
49 Pinion head for moving the microscope slide right-left

Stage for polished specimens

51 Stage plate, movable by hand in a horizontal plane
52 Bridge; after releasing the two screws it can be exchanged for another having a different opening
53 Plate with foam-plastic cushion as rest for the polished specimen. Is pressed by a spring against bridge (G 52)

G Stage Ensemble

The stage ensemble consists of a pinion box (G 1–6), firmly connected with the lower part of the carrier, to which are attached the stages screwed to stage carriers (G 11) as well as the condenser carrier (G 24) for work with transmitted light.

The Pinion Box

The pinion box contains a coarse and a fine adjustment. The two pinion axes are coaxial and operated by two pairs of knobs (G 3 and 4), a pair on each side of the box. On the coarse adjustment a brake (G 5), for regulating the stiffness of movement, is mounted near the right end of the axis. Turning the knurled ring (G 5) in direction of the arrow gradually tightens the movement. The brake should not be drawn up too tightly. Complete immobilization of the axis is impossible.

The coarse adjustment acts on a dovetail, located on the front side of the pinion box. The dovetail is rigidly connected with clamping strip (G 2). Stage and condenser carriers are readily attached to and detached from it (page 46).

The fine adjustment runs on roller bearings which have many advantages over ball bearings. It moves the entire pinion box up and down by about 2 mm. The range of movement is indicated by two white lines on the right side of the pinion box. The index line on the carrier should always lie approximately midway between these two lines.

An interval of the scale on the fine adjustment corresponds to about a 2 μ (= 0.002 mm.) movement in height of the specimen.

Stiffness of the fine adjustment can be regulated in instruments having serial numbers beginning with 55 042. If the stage sinks and the specimen goes out of focus, it only is necessary to slightly turn the right-hand fine adjustment knob (G 4) clockwise while holding the left-hand one stationary.

The Stages

Any of our stages for the large Microscope models can be mounted on the stage carrier (G 11). For ULTRAPHOT II we supply above all the rotating gliding stage (G 35) or the circular rotating and centering mechanical stage (G 42). A rotating stage is always recommendable, because a specimen mounted on it can be suitably oriented in the photograph.

The large rotating polarizing stage is employed if the ULTRAPHOT II serves as Polarizing Microscope (page 92). It is screwed firmly to the stage carrier and is adjusted at the factory so that its axis of rotation coincides exactly with the optical axis of the Microscope. A special rotating centering gliding stage (G 51) is provided for the examination of polished specimens. With its aid the specimen is easily oriented.

All of the rotating stages run on ball bearings. The circular mechanical stage (G 42), the gliding stage (G 35), and the special stage for polished specimens (G 51) are inserted in a centering piece (G 14) screwed to the stage carrier. Two centering screws (G 12) operating against the pressure of a spring bolt (G 15) provide for moving the stage by 2 mm. in all directions from its central position. The axis of rotation of the stage can be brought into the center of the image at any time.

See page 49 for centering of the stages.

The gliding stage has a base plate (page 48) which is mounted rotatably in the centering ring. The rotation can be clamped with screw (G 31). The stage plate (G 35) is connected with the base plate by a thin film of grease. It is moved in two coordinates over the base plate with the aid of a guide frame and screwed against rotation. Stop screws limit the range of movement. It amounts to 12.5 mm. in all directions from the central position.

The stage should be greased about every six months to retain its smooth functioning. Suitable grease (Cat. No. 47 33 91) accompanies every stage.

See page 48 for greasing of the stage.

The circular rotating and centering mechanical stage rotates, like the gliding stage, on two ball bearings within the centering ring. The centering ring fits into the centering piece (G 14). The rotation can be clamped with screw (G 41). The microscope slide is fastened in a holder (G 43) which is moved transversely by a spindle ending in knob (G 49). Knob (G 48) serves for the forward-backward movement. To prevent unintentional forward-backward movement of the slide while carrying out a transverse movement, the former must have adequate tension. It can be regulated with screw (G 47). The adjustment is approximately correct if the movable plate (G 44) no longer sinks of its own weight while the

stage is held in a vertical position with the slide holder horizontal.

Brake screw (G 47) is n o t a clamping screw. It must not be drawn up too tight, since that would only destroy the mechanism but never completely clamp the stage plate.

The stage is provided with two scales and verniers which can be read to 1/10 mm. These serve for quickly relocating a specific spot on a microscope slide. A presupposition for this is that the stage is centered, i. e. that its axis of rotation coincides with the optical axis of the Microscope, and that in each case the slide sits squarely in its holder. If a spot is encountered on the slide which later is again to be found, the coordinates of this spot are read on the two scales and recorded, e. g. 15.7 and 118.4. The recorded spot will subsequently again be in the field of view of the Microscope if the slide is mounted as before on the same (centered) stage and the coordinates are adjusted to the recorded values.

As is customary in searching a slide, it is advantageous also here to employ a low-power objective, since precision of the scale readings is limited.

The stage for polished specimens (G 51) – like gliding stage (G 35) – is provided with a stage plate which glides, with interposition of a film of grease, on a rotatable base plate seated in a centering piece (page 74).

The Condenser Carrier

This part is so constructed that the receptacle for the condensers at the same time acts as centering device with two centering screws (G 28) and a counterspring (G 29). The condensers are precisely adjusted in height with a rack and pinion movement operated by knob (G 27). The stiffness of this movement can likewise be regulated. For this purpose screw (G 23) is gently turned back and forth until the desired stiffness is obtained. Turning clockwise increases the stiffness, couterclockwise decreases it.

Two swing-out filter holders (G 26 and 30) are mounted below the condenser receptacle.

Path of rays (Fig. 2 and 3)

With the exception of the illuminators themselves, the illuminating apparatus is acommodated in the lower half of the instrument. It is so designed that any of the three illuminators simultaneously mounted on the instrument can be used for illumination with transmitted or incident light. A mirror rotatable about a vertical axis located at the intersection of the optical axes of the three illuminators serves for directing the emitted light rays in the desired direction. The mirror is adjusted with the setting knob (A 19) located closely above the right illuminator. The correct position in each case is marked by click stops and numbers (see table 5).

The mirror reflects the light on both sides. Therefore one of the lateral illuminators can be used for transillumination at the same time that the other serves for epi-illumination.

In the position for transillumination the light rays (Fig. 2) are conducted downwards into the base of the instrument and then into the illuminating apparatus of the Microscope by means of two additional, permanently adjusted mirrors. In addition, the base of the instrument contains a diaphragm which is operated from the outside by means of a knurled disk (A 24), a fixed auxiliary lens, and an auxiliary lens which can be swung in and out. The latter is swung out when working with the Compound Microscope (lever [A 23] on "Micro"). In this case the diaphragm regulates the size of the **luminous field.** The auxiliary lens is swung in for the illumination of large object fields in taking low-power photographs with LUMINARS (lever [A 23] on "Luminar"). In that case the fixed auxiliary lens acts as a long-focus condenser, the collector opening on the illuminator as non-variable luminous-field diaphragm, and the diaphragm (A 24) as **aperture** diaphragm. Diaphragms under the specimen are used (table 10, page 66) instead of an additional luminous-field diaphragm in front of the collector opening, which would lend itself to operating mistakes.

In the position for vertical-illumination (Fig. 3) the light rays are deflected upwards and enter the "illumination tube for incident light" by means of a fixed mirror. Besides auxiliary lenses this tube contains the centering aperture diaphragm for incident light (Fig. 64, page 97).

Table 5
Setting Knob for rotatable mirror to establish mode of illumination (A 19)

Position for	Right illuminator	Rear illuminator	Left illuminator
Transillumination	4	1	2
Vertical illumination	2	3	4

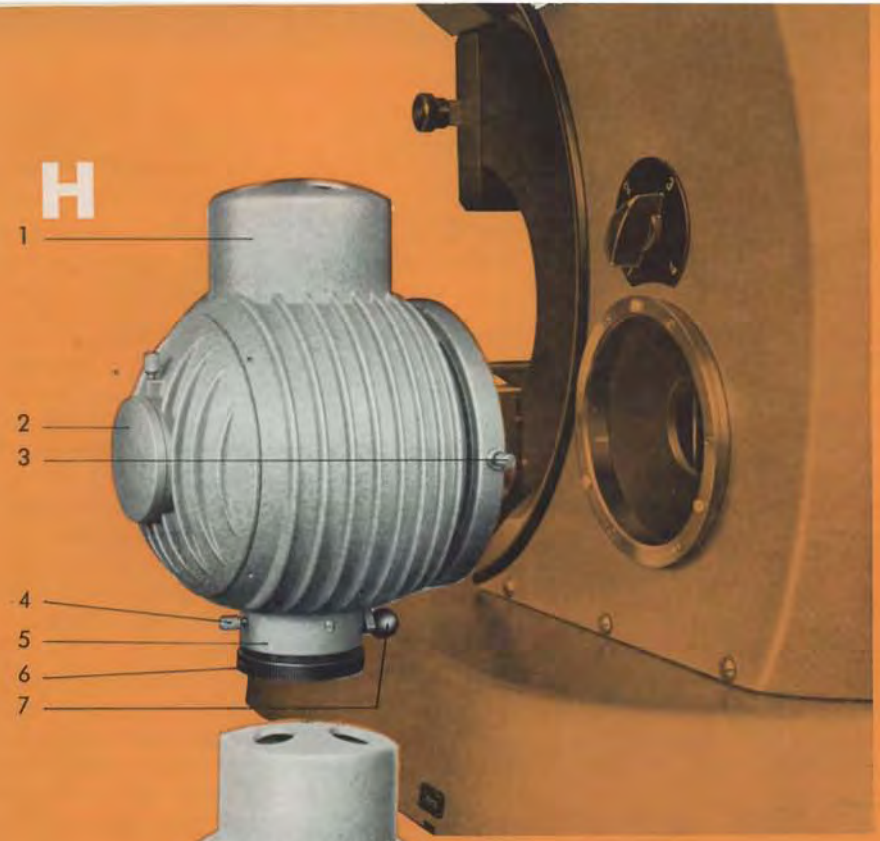

12

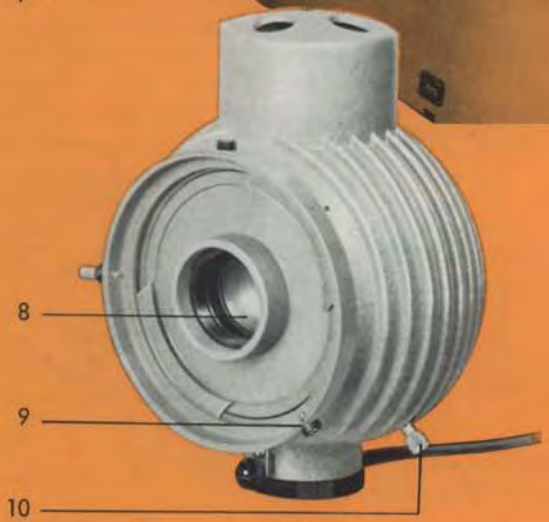

Illuminators

1 Lamp housing
2 Cover
3 Clamp for attaching the illuminator
4 Clamping screw for holding the lamp carrier (H 6) at the height found during adjustment (page 51)
5 Lamp holder
6 Lamp carrier
7 Knob for swinging the diffusion disk in and out
8 Collector
9 Three-point attachment for mounting the lamp housing
10 Screw for lateral adjustment of the light source

Table 6
Light Sources and their Characteristics

Light source	Cat. No. of spare bulb	Voltage Volts	Current Amp.	Power consumption Watt	Luminous density Stilb	Color temperature °K	Luminous area mm.
Low-voltage filament bulb	38 02 15	12	8	100	1500	3150	4×3.7
Carbon arc lamp	Carbons see Table 7	~	10		8000	4000	4 ⌀
		=	6		16000		
High-pressure mercury lamp HBO 200	39 16 03	$\sim 53^{+4*)}_{-3}$	3.4–4.4	200	25000		2.5×1.3
		$=61 \pm 4^{*)}$	3.1–4.0				

*) Exceeding these tolerances considerably shortens the life.

Illuminators

The following light sources are available for use on the ULTRAPHOT II:
A low-voltage filament bulb 12 V, 8 A,
a high-pressure mercury lamp HBO 200,
a high-pressure xenon lamp XBO 162 (in preparation), and
a microscope carbon arc lamp.

The low-voltage filament bulb and high-pressure mercury lamp are used most frequently. The pertinent data concerning these light sources are assembled in Table 6.
The low-voltage bulb as well as the mercury and xenon lamps are each held in a special socket which is installed in a lamp carrier (H 6). Every lamp carrier can be used in the lamp housing (H 1). It is inserted from below into the lamp holder (H 5); in so doing a slot provides for correct orientation. At the correct height the lamp carrier is clamped with screw (H 4).

The adjusting screw (H 10) beside the lamp holder serves for lateral displacing of the light source, in addition it can be adjusted in height by moving up and down in the holder (adjustment, page 51).

A diffusing disk is installed in the lamp housing (H 1). It is swung in front of the light cource by knob (H 7). A three-point attachment (H 9), for mounting the lamp housing on one of the ring dovetails (A 20–21) of the stand, is arranged centrally about the two-lens collector (aperture 0.62) (H 8).

If only one illuminator is used, it may be attached optionally to any of the three ring dovetails. If two illuminators are used, it is appropriate to mount them right and left. The illuminator which creates the greatest amount of heat, e. g. an HBO 200, belongs on the left-hand side.

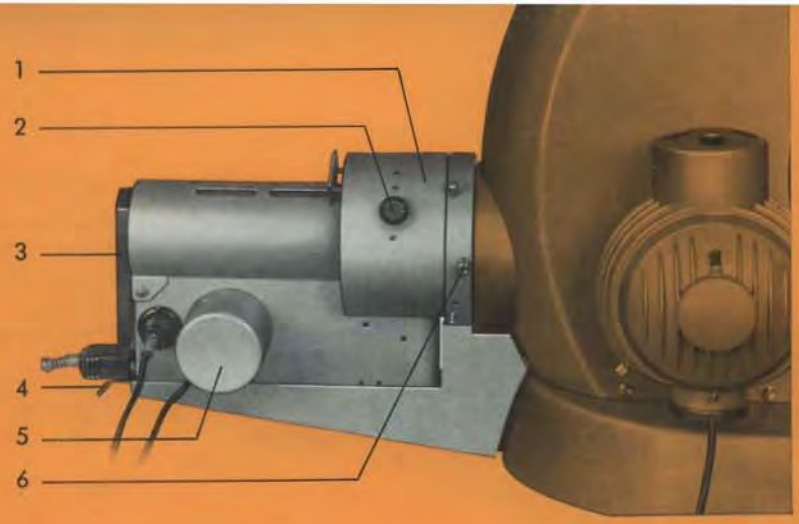

K

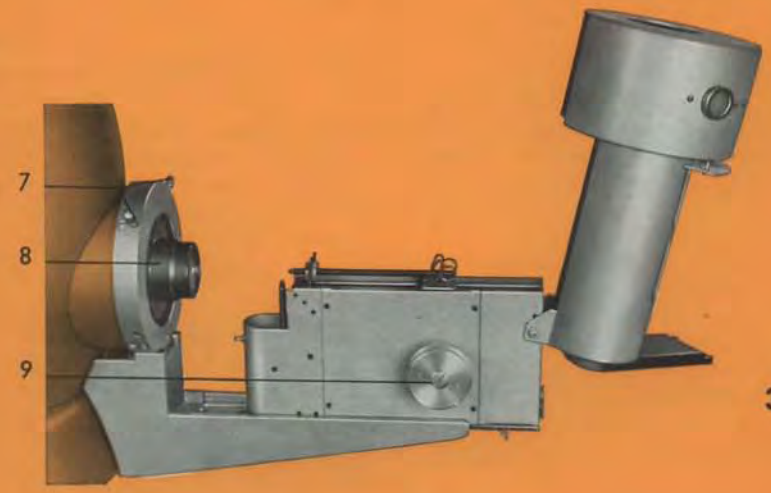

3

Carbon Arc Lamp

1 Cover

2 Ground-glass disk for observing the arc

3 Handle, to prevent swinging back the cover as long as the lamp is connected to the power supply

4 Spring catch; after depressing it the lamp housing can be pulled out backwards. A space of at least 60 cm. behind the work table is required for manipulation of the arc lamp

5 Housing of the servo-motor for the carbons

6 Clamping screw for holding the arc lamp on the ring dovetail (A 20)

7 Centering screws for the collector (K 8)

8 Collector for the arc lamp. Behind it lies the cooling cell which is filled with distilled water. Its window can be removed for cleaning the cell

9 Knobs for adjusting the position of the carbons at the arc gap

Halide-metal CSI 250 W Lamp

This mercury lamp with additions of metal iodide has high efficiency in the longer wavelength region and an attenuating effect in the blue range. This lamp radiates white light which is appropriate for color photomicrography and polarized-light microscopy. Due to its large, homogeneous radiant area and its high luminance, this source is particularly well suited for all types of microscopic work requiring intense light. It is used for photomicrography, for projecting microscopic specimens, for work with heavily stained specimens and illumination methods in which a large portion of the available light is absorbed.

For color photomicrography with artificial-light film, we recommend the Lifa filter R 12 (manufacturer: Lichtfilterfabrik, Augsburg; in the United States, Kodak Wratten filter).

This lamp operates only on AC. Its light flickers in rhythm with the double line frequency and is therefore not suitable for cinematography.

Due to its high operating pressure, this lamp must be operated only when its housing is closed.

To start the lamp, depress the starting key on the choke until the ignition hum stops (approx. 4 seconds). It serves no purpose to keep the key depressed for more than 10 seconds. Hot lamps must be allowed to cool off for a short while.

Before the bulb is inserted into the lamp housing, the diffusion disc should be swung out so the bulb will not hit it. This can be checked after the round cover at the back of the lamp housing has been removed. During operation, however, the cover must be firmly closed.

Table 7
Carbon Arc Lamp

Supply voltage	Terminal voltage Volts	Current of the lamp Amp.	Resistor		Carbons		
			max. Ohm	Catalog No.	horizontal	vertical	Catalog No. 100 pairs
= 110	60	6	11.5	46 86 20	180×6 H	115×6 D	46 72 40
= 125–220			35	46 86 25			
~ 110	50	10	9	46 86 21	180×6 D	115×8 D	46 72 45
~ 125–220			18	46 86 26			

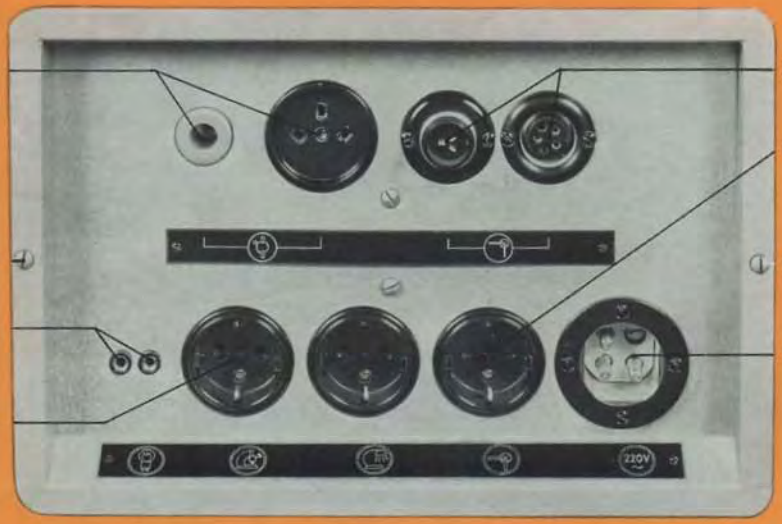

L

14



K

Instrument Table

The ULTRAPHOT II is always delivered by us together with an instrument table. It resembles a desk. The table top affords sufficient work space, four drawers provide abundantly for storing the manifold accessories (Figs. 15–17, page 38). A fifth drawer, which is generally locked (by two screws in rear), contains all the required electric connecting devices with exception of the resistor or rectifier for the arc lamp. On the front panel of the drawer a voltmeter, an ammeter, switches and regulators are installed, on the rear panel the plugs for all electrical connections are located.

1 Outlets for connecting the lamp socket (H 6) of the high-pressure mercury lamp HBO 200
2 Fastening screw for drawer, same as (L 7). These screws are released if the drawer is to be pulled out, only after plug (L 8) is pulled
3 Connection for lamp socket of the low-voltage bulb 12 V
4 Socket for cable from the stand (A 16), carries 220 V AC
5 Connection for the screw plugs of the automatic carbon feed for the arc lamp
6 Connecting socket for resistor for the carbon arc lamp, or for rectifer, if it is to be connected with 220 V AC
7 Same as (L 2)
8 Socket for power-supply cable 220 V AC. The outlet must be grounded
10 Regulator for distance between carbons of the arc lamp
11 Ammeter for operation of the high-pressure mercury lamp HBO 200
12 Ignition key, to be briefly depressed if lamp HBO 200 does not ignite after switching on (L 13)
13 Closing switch for lamp HBO 200
14 Pilot lamp, indicates that switch (L 15) is on
15 Main switch
16 One of the four sockets for scale lamp 12 V 35 mA (Catalog No. 38 02 14)
17 Voltmeter for low-voltage bulb which can be operated at under-voltage, rated voltage of 12 V, or briefly at over-voltage up to 15 V
18 Switch and voltage regulator for the low-voltage bulb

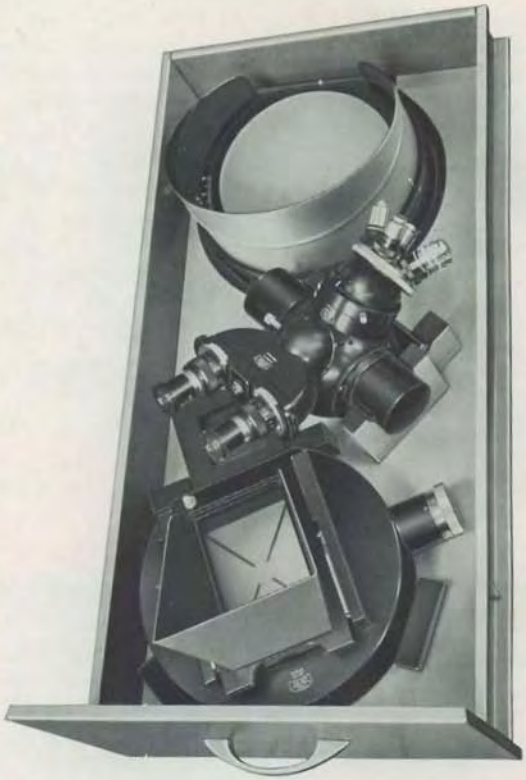

15

Drawer (Fig. 15) accommodates the Projection Head (D), the Tube Head (E) with attached tube (E 3), and revolving nosepiece (E 9), as well as the 9×12 cm. (4×5") Photo Head (B).

Drawer (Fig. 16) accommodates the objectives, eyepieces, filters, focusing magnifier, nosepieces, and the vertical illuminator. A readily accessible compartment is reserved for 9×12 cm. (4×5") plate and film holders.

Drawer (Fig. 17) accommodates a stage with its carrier, the condenser carrier, as well as the accessories for low power photographs.

Unpacking and setting up the ULTRAPHOT II

A room as quiet and free of vibrations as possible should be selected for setting up the instrument. Certain vibrations are dampened by rubber feet on the base; however, considerable expenditures would be required to eliminate all vibrations which can occur in a room subject to great vibration.

It is advantageous if the room can be darkened. At least the instrument should be so placed that the operator does not face bright surroundings and that no bright light strikes the instrument, especially the focusing screen (B 7).

First the instrument table is set up in the selected location. The drawers are tested whether they slide easily and whether their locks function smoothly. They will operate perfectly only if all drawers are properly pushed in to the stop. When unlocking with the safety key, the lock bolt automatically snaps out. Before depressing the lock bolt, care should be taken that the key does not lie in one of the drawers locked by it.

For transportation, all detachable parts excepting the Photo Head (stage on stage carrier, condenser carrier, Tube Head, and illuminators) have been removed from the metal cover (A 16) and the stand (A 18). The mirror carriage is screwed on by means of a metal angle bar (A 30) and its roller bearing disengaged by wooden wedges (A 26). Also the switching lever (A 23) is secured for transportation by a red screw. This protection, of course, must be removed.

Experience has shown that our manner of packing, wrapping in an abundance of paper and bedding in an excelsior cushion, is superior to shipment in a special packing case. Therefore the latter is not used. Before packing, all openings in the instrument are closed with their respective covers or carefully stopped with Styropor plugs. This effectively prevents entry of packing material into the interior. As a further protection against dust, the entire package is enclosed in a plastic bag. The other parts are packed in a similar manner.

If occasion should arise to again ship the apparatus, e. g. back to the factory for repairs, **we urgently recommend to pack it in the same manner.**

Without fail:

1. secure the mirror carriage (A 2) and the switching lever (A 23) in the same manner as we did when making shipment,
2. close all openings with the covering parts and materials originally used, which should be carefully preserved, and
3. protect the instrument with a plastic bag.

If this is not done, there may be damage during transportation and severe soiling of optical parts in the interior. Their elimination would entail considerable expense, to be met by the shipper.

The care taken in unpacking the instrument and its individual parts should be commensurate with the high value of this precision instrument. Special care should be taken not to use pinion heads and other operating elements as handles. Assembly of the apparatus should begin only after all individual parts have been unpacked and checked with the packing list.

First the base (A 22) of the instrument, carrying the stand (A 18) with attached 9×12 cm. (4×5") Photo Head (B) and the metal cover (A 16), is put in its place on the instrument table. Then the red screw holding the switching lever (A 23) and the blocks of the mirror carriage (A 26) and (A 30) are removed.

The further assembly is appropriately undertaken in the following steps which will, at the same time, familiarize the user with the various manipulations required in attaching or removing interchangeable parts:

1. After releasing lever (A 25) the Photo Head is pushed upwards and removed.
2. Disengagement wedges (A 26) and the retaining angle bar (A 30) of the mirror carriage marked with the red lacquer are removed by releasing screws (A 29 and A 31). Check whether by turning knob (A 17) the mirror carriage can be moved forwards and backwards to the stops. The movement is regulated by us so as to run rather stiff.
3. Reinstall the Photo Head.
   This is possible only if the mirror carriage (A 2) is not moved too far forwards. Correspondingly, a too far forward position of the mirror carriage also prevents removal of the Photo Head.

Attaching the separately packed parts

Inserting the bulbs into the lamp housings

Before attaching the lamp housing (H 1) to the metal cover (A 16) of the ULTRAPHOT II, the lamp socket (H 6) after releasing clamping screw (H 4) is pulled out of the holder (H 5).

The low-voltage filament bulb 100 W remains in the lamp housing for transportation. Before use, it is examined once more for cleanness. Smudges (fingerprints) are removed with a clean cloth, preferably moistened with alcohol as a solvent. Bulb and socket are then carefully reinserted into the holder (H 5). The socket can only be inserted if the longitudinal slot in its cylinder is so oriented that it can glide over the guide pin extending into the interior of the holder. Provisionally the socket (H 6) is inserted up to the stop.

To insert a new filament bulb, the lamp housing (H 1) is detached and the lamp socket (H 6) pulled out of its holder as described above. To remove the bulb it is held by its head, pressed into the socket, and removed from the bayonet by turning left. To insert a new bulb, the two different-sized bayonet blades must lie in the corresponding recesses of the lamp socket. The bulb is pressed in and turned right to the stop.

The mercury lamp HBO 200 is removed from the original factory-sealed package, inserted into the bayonet socket of its carrier, and connected by the two free ends of the feed wires (Fig. 18). In these manipulations care is required not to break the lamp. Before insertion into the lamp housing, this lamp also is to be carefully freed from any grease and other traces of smudge. Insertion is the same as with the filament bulb. Again attention is to be paid to correct orientation of the longitudinal slot. Special care is required not to injure the laterally projecting arm of the ignition electrode. Otherwise, the manufacturer's instructions accompanying the bulb apply.

Before operating the high-pressure mercury lamp HBO 200 for the first time, it is necessary to adjust the power-supply unit in the table drawer (L) to the correct current. This is indicated on each burner package or in the accompanying instructions. The procedure is as follows:

1. Break the power supply for the instrument by pulling the plug out of socket (L 8).
2. With a screwdriver release the two screws (L 2) and (L 7) on the rear of the drawer.
3. Pull out the drawer.

4. With the red screw in the base plate of the power-supply unit, the choke is set on I or II, depending on the designation of the lamp as "L_1" or "L_2". The same procedure is employed when replacing burners.



18

Attaching the illuminators

The illuminator with the low-voltage filament bulb 100 W belongs on the right ring dovetail (A 21), the illuminator with the high-pressure mercury lamp HBO 200 on the left ring dovetail. The carbon arc lamp fits only the ring dovetail (A 20) on the rear of the instrument.

1. Unscrew the cap of clamping screw (H 3) far enough that the spring bolt can be sufficiently depressed.

2. Apply the illuminator to the ring dovetail in such a manner that the spring bolt rests against the bevelled edge and recedes when pressing the illuminator towards that edge.

3. Apply the contact face of the illuminator to the ring dovetail so that the two projecting contact points (H 9) likewise rest on the bevelled edge of the dovetail.

4. Turn the illuminator so that the lamp holder is exactly vertical and block the spring bolt (H 3) by vigorously drawing up the screw cap. Now the illuminator should be immovably attached.

5. Establish electrical connection of the illuminators and stand to the plugs on the rear panel of the instrument table (page 36). Connect the instrument table with the outlet of the 220 V AC supply line by means of socket (L 8) and the accompanying cable. A suitable step-up transformer must be employed if the supply line has a different voltage. Connection to direct current is not permissible.

6. Check whether the lamps operate properly. Switch on the main switch by moving lever (L 15) from 0 to 1. Pilot lamp (L 14) must light up. If not, check whether the instrument table is connected with the electric supply line. If necessary also inspect the main fuse.

–1. **Filament bulb.** Switch on by turning switch and regulating knob (L 18). With progressive turning of the knob the filament bulb must burn with ever increasing brightness. At the same time, the illumination of the voltmeter (L 17), indicating the voltage at which the filament bulb is operating, must light up. Besides illuminating the scale, this light also indicates that the filament bulb is switched on.

The operating voltage of the filament bulb should always be kept as low as possible. That saves the bulb and prolongs its life. Its rated voltage is 12. If need be it can be briefly overloaded up to 15 V. For color photographs it should invariably be operated at 12 V.

–2. **High-pressure mercury lamp.** Switch on by turning switch knob (L 13) from 0 to 1. Usually the burner ignites at once. This is indicated by the deflection of the pointer of the ammeter (L 11). At first it indicates a somewhat higher current than specified on the package in which the burner was delivered. During the warm-up period the correct current is gradually established. In general this takes 2 to 3 minutes. Here too, the illumination for ammeter (L 11) lights up when the mercury lamp is switched on.

If the lamp should not ignite at once, the ignition key (L 12) is briefly depressed.

–3. **The carbon arc lamp** is always fastened on the back the ULTRAPHOT II housing. With interposition of a resistor the carbon arc lamp can be connected to either **direct** or **alternating current.** Connection to direct current has the following advantages:

The arc lamp burns more quietly.

The current consumption and consequently development of heat is less.

The luminous densitiy of the crater is considerably higher.

For these reasons it is advisable to employ a dry rectifier if only alternating current is available.

The rectifier (Catalog No. 38 29 02) is for connection on its primary side to a 50/60 cycle alternating current of 110–125–150–220–240 V. It delivers a direct current of 4 or 6 amperes. It is set on 6 A for operating the arc lamp. The required resistor is located in the rectifier.

The control device, in the instrument table, for the carbon feed must invariably be connected to a 220 V alternating current of 40–60 cycles. The supplied DC voltage may never be less than 100 V, otherwise the burning of the arc lamp is unsteady.

Inserting carbons in the arc lamp

1. Depress spring catch (K 4) and pull the lamp back to the stop.
2. Pull the electric plug and swing handle (K 3) upwards, and likewise the cover (K 1) of the housing.
3. Bring the two carbon holders forward resp. upwards to the stop by turning regulating knob (K 9) to the left.
4. Clamp the vertical carbon with aid of the accompanying spanner into its holder.
5. Retract the carbon holders backwards resp. downwards to the stop by turning the regulating knob to the right.
6. Insert the horizontal carbon from the back through the carbon guide ring and clamp its butt end in the carbon holder.
7. Turn the regulating knob to the left until the conical ends of the carbons almost touch, at equal distance from the intersection of their axes (Fig. 19).
8. Lower the housing cover (K 1) and handle (K 3), push the arc lamp in to the stop, and reinsert the electric plug.
9. Connect the arc lamp by means of the two screw plugs to the arc-control device in the drawer of the instrument table (L 5).

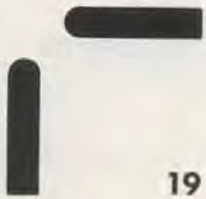

19

Igniting the arc

Switch on the arc lamp by depressing the black end of the switch on the plug below handle (K 3).

If properly connected, the carbon feed begins to work until the carbon tips meet. The behavior of the carbon tips is observed on the ground-glass disk (K 2) located on the lamp housing.

By slightly and jointly turning the regulating knobs (K 9) backwards the carbon tips are separated somewhat and the arc strikes between them. With direct current it is not the arc which acts as light source, but the glowing crater at the end of the horizontal carbon. If this is not the case, the plug below handle (K 3) must be reversed.

By turning the regulating knobs (K 9) the carbons are brought into the position shown in Fig. 19. They should be maintained in this position by the automatic carbon feed mechanism. For that purpose the regulating knob (L 10) for the carbon separation is adjusted so that the responding relay barely reacts with a change of the arc voltage.

The regulating mechanism can keep the carbon tips in precisely the once established location only if the carbons are consumed uniformly. This hardly ever is the case, due to inhomogeneities resulting from manufacturing conditions. Therefore, when using a carbon arc lamp, it is necessary from time to time to check the positions of the carbon tips and, if necessary, correct them with the regulating knobs (K 9).



20



21



22

Attaching the stage and condenser carriers

1. Set the clamping lever (G 22) into its uppermost position. Apply the right guide rib of the **condenser carrier** (G 21) to the bevelled right side of the dovetail (G 2) near its middle and swing the carrier to the left until the spring bolt snaps in (Fig. 20).

2. With the clamping lever (G 22) in middle position, where it lightly engages, slide the condenser carrier downwards until it meets the stop (Fig. 21).

3. Turn the clamping lever downwards until the condenser carrier is firmly held (Fig. 22).

4. Inserting the **condenser.**
   Tilt it slightly (Fig. 23) and with its conical holding ring press the spring bolt (G 29) outwards. Next, place the condenser flat on the contact surface and rotate it until the spring bolt engages the notch in the holding ring.



23

5. From above, by means of its clamping device (G 11), attach the **stage carrier** together with the stage to the dovetail (G 2). To do so the clamping lever (G 13) is brought into its uppermost position. First the lower right of the guide rib is set behind the right bevel of the dovetail, then the spring bolt at the left, and finally the upper part of the guide rib is placed behind the right bevel of the dovetail (arrow in Fig. 24).

6. Lower the stage carrier to the stop on the condenser carrier and turn the clamping lever (G 13) downwards until stage carrier is firmly held. With transillumination it is important that condenser carrier and stage carrier are always in good contact with their stops. If this is not the case, "unexplainable" adjustment errors can arise. Condenser carrier (G 21) is not required for vertical illumination and can be removed from the instrument.

7. Finally, the condenser is moved upwards to its stop with pinion (G 27).



24

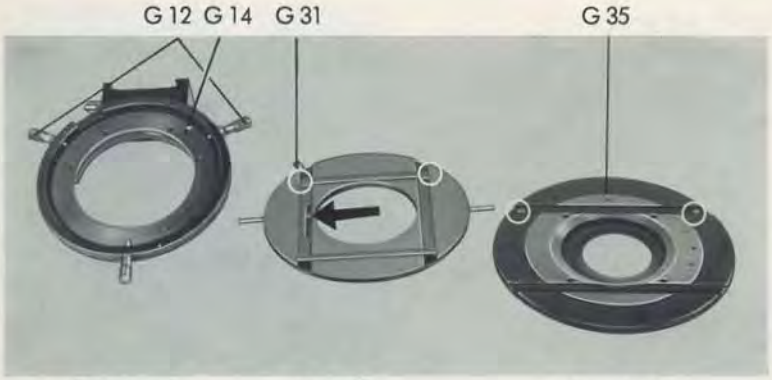

Centering piece Base Plate Stage plate

25

Greasing the gliding stage (Fig. 25)

To insure satisfactory functioning of this stage under all magnifications, it should be relubricated semianually with the accompanying grease (Catalog No. 473391). The procedure is as follows: The centering screws (G 12) are turned back and the base plate with adhering stage plate is lifted out of the centering piece while pressing against the spring bolt (G 15). Then the two plates are pulled apart and their gliding surface as well as the guide frame thoroughly cleaned, if necessary using xylol. After drying, a very thin film of the grease is applied with a finger to the gliding surfaces, their grooves, as well as to the guide frame. The less grease used, the better. Next, the guide frame is replaced in the base plate. It lies correctly if the stop screw (arrow in Fig. 25) in the gluide groove of the base plate lies in the recess of the guide frame and limits its movement.

Replace the stage plate (G 35) on the base plate and guide frame, so that the guide groove with its two limiting screws of the stage plate lies over the projecting part of the guide frame having small notches on both sides (circular marks in Fig. 25).

Move the two plates back and forth over one another under moderate pressure in order to uniformly distribute the grease. The stage plate must not glide too easily over the base plate. If that should be the case, there is still too much grease between the gliding surfaces.

Finally return the adhering plates to the centering piece and at least approximately center them in order that the object stays in the field of view as the stage is rotated.

Centering the stages

1. To locate the optical axis of the Microscope, an eyepiece with cross lines is placed in the tube. If that is not available, the image of the closed centered luminous-field diaphragm can be used for marking the center of the field of view (Fig. 45 C, page 63).

2. Mount a slide on the stage having numerous small particles evenly distributed, e. g. evenly dispersed dust particles, and focus with an objective 10× or 16×.

3. If the stage is rotated, its approximate center of rotation is readily recognized, even if it is located outside the field of view. By operating the two centering screws (G 12), the center of rotation is brought approximately into the center of the field of view. In general such an approximate centering suffices.

4. A still more precise centering is easily obtainable by repeating the procedure. To be sure, it cannot be permanently maintained. Rather it must be established anew after every change of objectives, and naturally also after every removal and reattachment of the stage. This is because small deviations of about 1/100 mm. are unavoidable in centering the objectives or in attaching the stages. However, in the microscopic field of view stretches of 1/1000 mm. are readily visible.



26



27

Attaching the Tube Head and the Tube

If use is to be made of the 9×12 cm. (4×5"). **Photo Head,** it has to be **attached before** mounting the Tube Head. This is necessary because the protruding Projective extends into the shutter housing (B 8 and B 15) of the Photo Head.

The Projective of the 35 mm. Photo Head extends into the opening (after removal of the cover) on top the Tube Head. Therefore, the latter must be attached **before** the **35 mm. Photo Head** is mounted.

1. **To attach the Tube Head** (E) clamping screw (A 7) is unscrewed up to the stop.

2. With the Tube Head turned somewhat towards the left, the left edge of the two bevelled sides of the attachment plate is applied to the counterstrip of the receptacle (Fig. 26).

3. The Tube Head is slightly raised until the upper edge of the attachment plate touches the upper strip of the receptacle.

4. The attachment plate of the Tube Head is swung completely into the receptacle.

5. The Tube Head is allowed to descend, down to the stop. In so doing, a projection on the right edge of the attachment plate engages a projection on the receptacle and prevents the Tube Head from accidentally falling off.

6. Clamping screw (A 7) is drawn tight; in so doing it is helpful to press the Tube Head into the receptacle with the left hand.

7. When **attaching the inclined binocular tube** (E 3), the knurled screw (E 15) is turned out far enough so that the spring bolt on the inside of the ring dovetail bed, blocked by it, can be completely pressed back.

8. The ring dovetail of the tube is pressed against this bolt (Fig. 27) until it glides behind the two opposite contact surfaces, after which screw (E 15) is drawn tight.

Before using the ULTRAPHOT II it is necessary to adjust the light source and to calibrate the automatic exposure device for the film material employed.



28 incorrect



correct **29**

Adjusting the light sources

1. Switch on the light source and turn setting knob (A 19) so that its light passes through the light-exit opening in the base of the instrument (Table 5, page 31).
2. Attach objective 2.5×, 4×, or 6.3× to the revolving nosepiece and focus. Set OPTOVAR (E18) on 1.25. Push beam-splitting slide (E 17) into middle position (red ring) and open the camera shutter by lowering cocking lever (B 9) to its horizontal position. A bright spot appears on the focusing screen, probably not sharp nor lying in the center.
3. Set diaphragm (A 24) about on "5" and lever (A 23) on "Luminar".
4. Raise the stage to the top with pinion head (G 3) and focus the condenser with pinion head (G 27) until a sharp image of the diaphragm is formed on the focusing screen (B 7). If this image is not in the center of the focusing screen (Fig. 28), it is brought there by using the centering screws (G 28) of the condenser.

   Centering is facilitated if the size of the diaphragm is adjusted so that it barely extends beyond the ends of the clear diagonal strips of the focusing screen when it lies symmetrically between them (Fig. 29).
5. Swing the diffusing disk out of the beam with knob (H 7). A portion of the image of the light source may appear in the aperture of the diaphragm image as shown in Fig. 28.



30

6. If, when using the filament bulb or the mercury lamp, no part of the image of the light source appears, then the diaphragm is opened wide to locate it, and it is adjusted in horizontal direction by turning adjusting screw (H 10), in vertical direction by moving lamp socket (H 6) up and down after releasing clamping screw (H 4), until the image lies at the center of the screen. Fig. 30 shows part of the spiral of the filament bulb horizontally centered, diaphragm again closed, Fig. 31 shows the sprial completely centered; Fig. 32 shows the completely centered arc between the electrodes of the mercury lamp.



31



32

7. The diffusion disk is again switched into the beam with knob (H 7). Both the filament bulb and the mercury lamp should regularly be used with swung-in diffusion disk. Only with very high magnifications is it occasionally permissible to remove the diffusion disk from the beam in order to increase the illumination intensity.

8. Adjustment of the carbon arc lamp is the same as in sections 1–5. Then the image of the crater is brought into the center of the focusing screen by operating the two centering screws (K 7).

Holders for 4 x 5" film pack, roll film, and magazines

The ULTRAPHOT II can readily be rearranged for the use of such holders. To do so, the two guide strips (Fig. 33), each attached to the Photo Head with three screws, must be dismounted and screwed to the frame of the focusing screen (Fig. 34 A).

1. First the frame of the focusing screen (B 2) is removed from the Photo Head by vigorously compressing the two retaining clips (B 3) and pushing the frame upwards and out.

2. The screws on both guide strips (331) and (332) are removed, the strips turned about their longitudinal axes, the screws inserted into the holes from the back, and the strips laid on the detached frame as in Fig. (34 A).

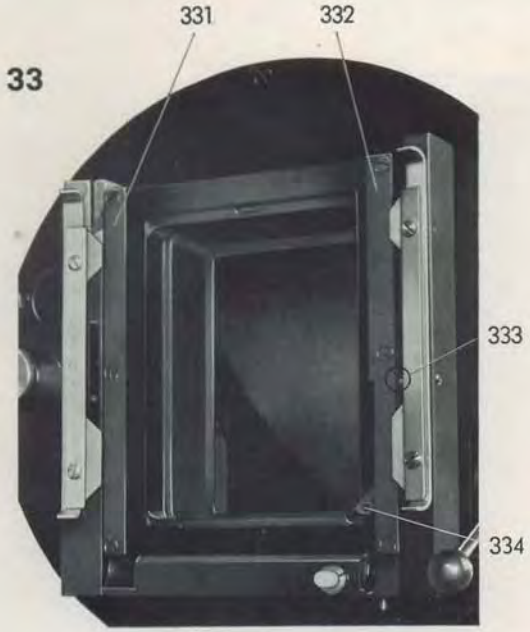

33

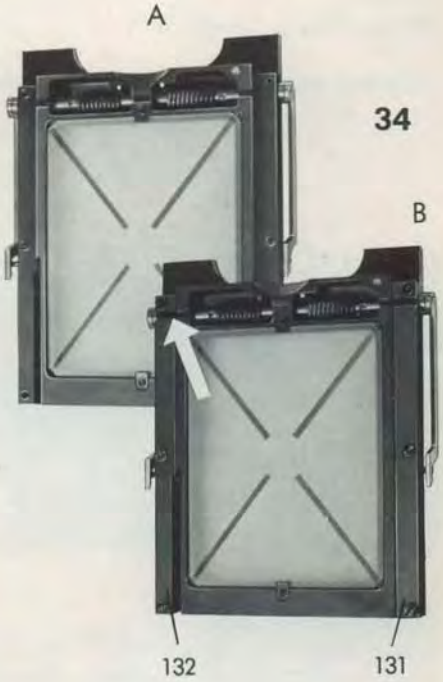

34

Strip (332) comes on the left, strip (331) on the right side of the frame. There they are screwed fast so that the flat grooves of the strips (arrow) lie at the top. The recess on the strip now lying on the left of the frame may not interfere with the cocking lever (334).

3. The focusing screen (Fig. 34 B) is then again attached to the Photo Head and pressed far enough downwards that the retaining clips (B 3) snap in behind the pin (333).

4. After focusing the image, the 4×5" double holder is inserted between the frame (B 2) of the focusing screen and the Photo Head. With holders that do not permit this, the frame is removed from the Photo Head (as in section 1) and the holder held with bolts (B 4) (Fig. 35).

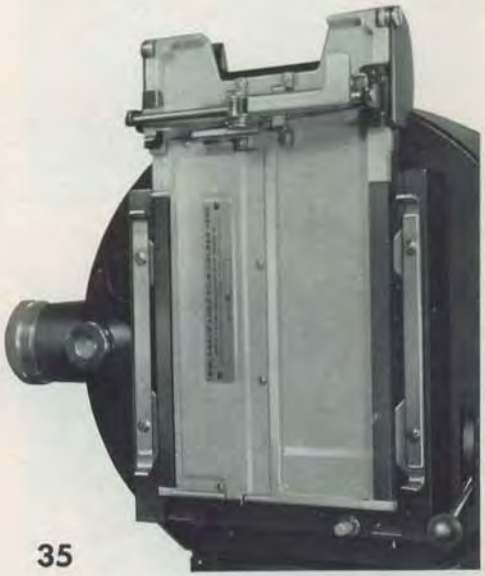

35