West Germany

D-7082 Oberkochen

Axiophot Photomicroscope

Transmitted and
Reflected-light fluorescence

Operating instructions

1

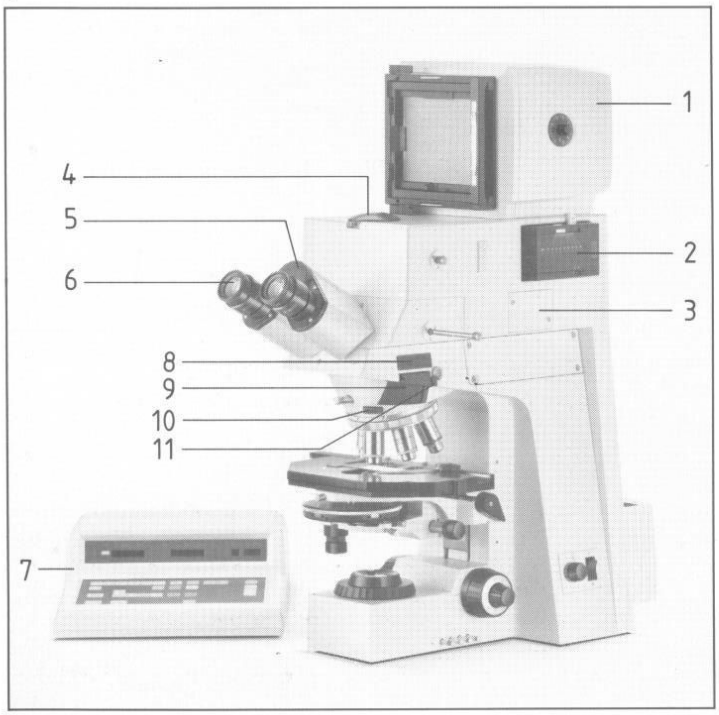

2

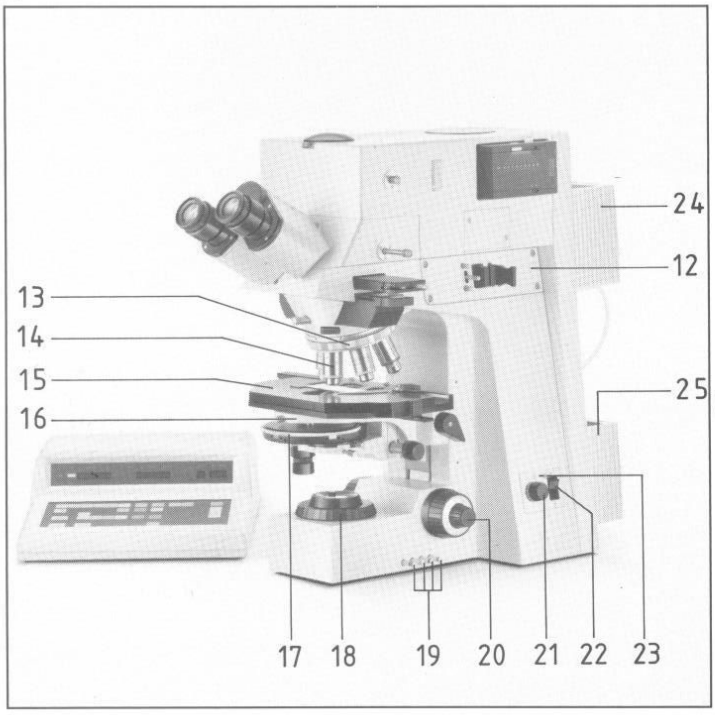

Camera components

1 4″×5″ camera
2 35 mm film cassette Axio Mot
3 Camera system
4 Port for TV camera
5 Binocular tube
6 Eyepieces
7 Camera control panel

Stand head, stand head carrier with reflected-light system FI

8 Slot for analyzer and Bertrand lens slide
9 Slot for Optovar slide and reflector slide FI
10 Slot for auxiliary objects
11 Slot for reflected-light polarizers
12 Reflected-light system FI (for reflected-light fluorescence only)

Nosepieces, objectives

13 Nosepiece
14 Objective

Stage components

15 Specimen stage
16 Stage carrier with condenser carrier
17 Condenser

Stand base

18 Luminous field diaphragm
19 Filter magazine
20 Coaxial coarse/fine focusing control

Lamp power supply and illuminators

21 Power switch
22 Toggle switch to change between halogen reflected-light fluorescence and transmitted light
23 Power signal lamp
24 Reflected-light fluorescence illuminator
25 Transilluminator

Microscope stand, camera system and control panel are parfocalized and mutually aligned. All components bear equal serial numbers and are not interchangeable with the components of other instruments.

Contents

	Page
Microscope adjustment in brief (Practical microscopy with the operational instrument)	5
Description of instrument (Components and operating controls of the operational instrument)	
1.0 Lamp power supply	6
2.0 Illuminator	7
3.0 Stand base	8
4.0 Specimen stage	9
5.0 Condenser	10
6.0 Image-forming components (objectives, nosepieces, eyepieces, magnification changer, Bertrand lens slide, DIC accessories, tubes)	14
7.0 Fluorescence equipment	17
8.0 Camera components	18
9.0 Camera control panel	20
Phase contrast microscopy	25
Differential interference contrast (DIC) microscopy	26
Fluorescence microscopy	28
Darkfield microscopy	29
Photomicrography	
35 mm B/W	30
35 mm color	31
Large format	31
Fluorescence	31
Compensation of reciprocity failure	32
Exchange of instrument components or parts	
Condenser	33
Phase stops and/or DIC prisms in condenser turret	34
Fluorescence reflector	36
Stage	37
Large-format camera attachment	37
Spare part ordering specifications	38

Special notes

- The 6 to 10-digit numbers, e.g. 451827, are ordering numbers of instruments or instrument components.
- Caution!
  The instruments shall not be used in explosion-hazardous locations.
- The instruments shall be changed and/or repaired only by the manufacturer or his authorized representative.
- Specifications subject to change.

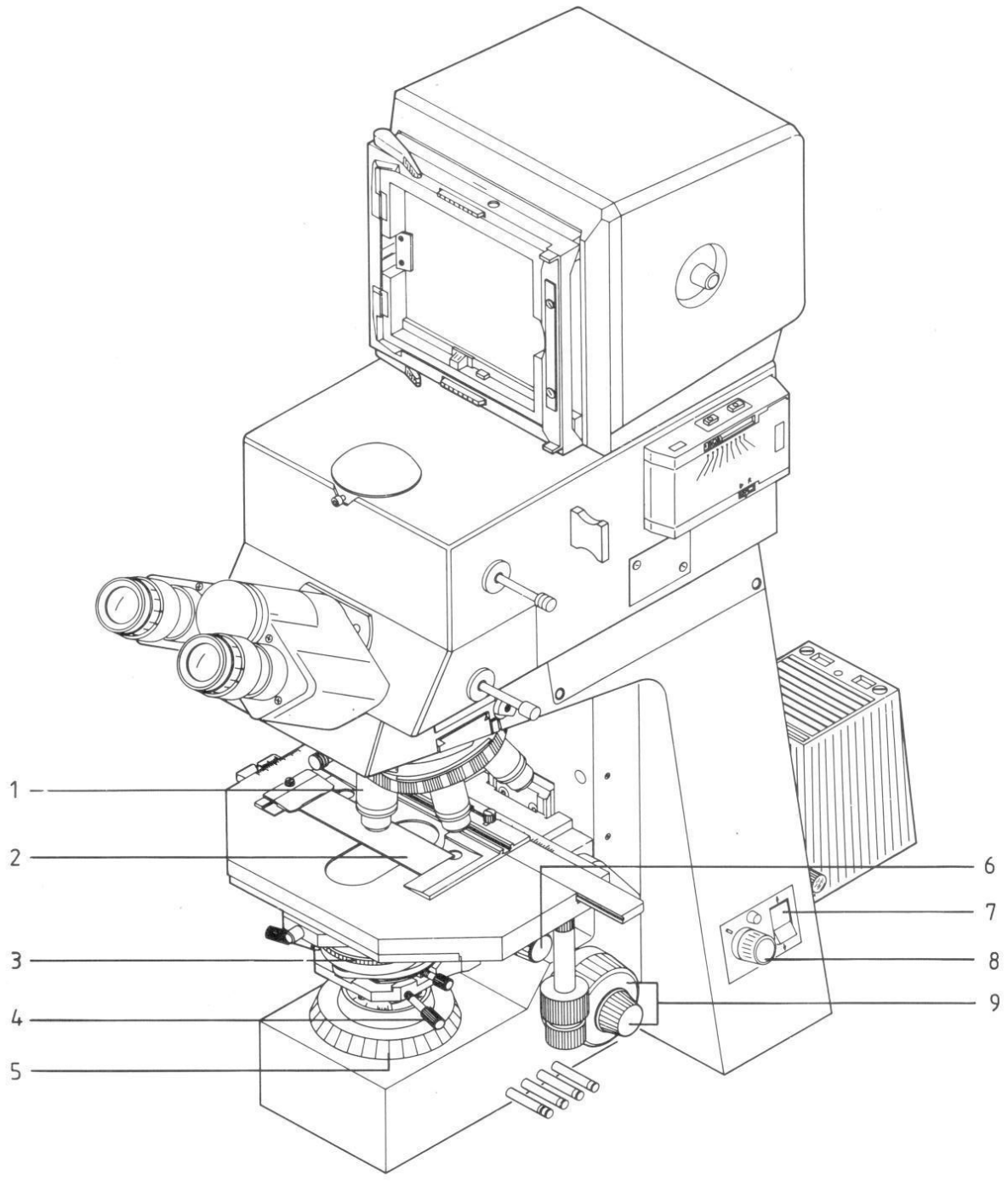
1
2
3
4
5
6
7
8
9

Microscope adjustment in brief (Brightfield)

Note: Framed numbers like [1.1] refer to the description of the instrument starting on page 6.

- Check data on nameplate (instrument back) and local mains data for coincidence. Plug in microscope power cable. Select lower (or only) illuminator with switch (7). Power-on with (8). Set to 3-4 V.
- Put on a high-contrast specimen (2) (coverglass face up!).
- Turn in 10× objective (yellow ring) (1) on nosepiece, check 0-positions on the eyepiece scale. With (6) move condenser to topmost position (front lens not swung out).
- Set index of condenser turret to H (brightfield) and close the diaphragm about half with (3).

You should now see light spots (the exit pupils) behind the eyepieces. (If not, check whether the tube has been set to "nur Foto" with [8.1] or [8.2] .)
When you look into the tube you will see a bright circle (the eyepiece stop) with each eye. By turning the two eyepiece tubes to your PD you will merge the two circles into one.

Further steps of Köhler illumination adjustment:

- Focus the specimen with coarse/fine focusing control (9). (If your eyes have different powers and for work without eyeglasses →[6.6]).
- Close luminous field diaphragm (5) moderately; it will become unsharp (A).
- Focus the diaphragm image by lowering the condenser slightly with (6) (B).
- Move the diaphragm image to the center of the field of view with screws (4) (C), and
- open luminous field diaphragm (5) until it just disappears from the field of view (D).

The contrast is adjusted with the condenser diaphragm (3), depending on the specimen. If you are not certain how far to stop down: ca. 2/3 of the rear element of the objective (it is visible at the tube bottom without eyepiece in the tube) should be illuminated if a specimen is of moderate contrast (E).
Field of view and objective aperture change, of course, with each objective exchange, so that the last-mentioned steps must be repeated.
As soon as a low-power objective images more than the condenser can illuminate the condenser front lens must be swung out, either automatically by lowering the condenser, or by a lever. For a full description of the procedure see page 10.

4

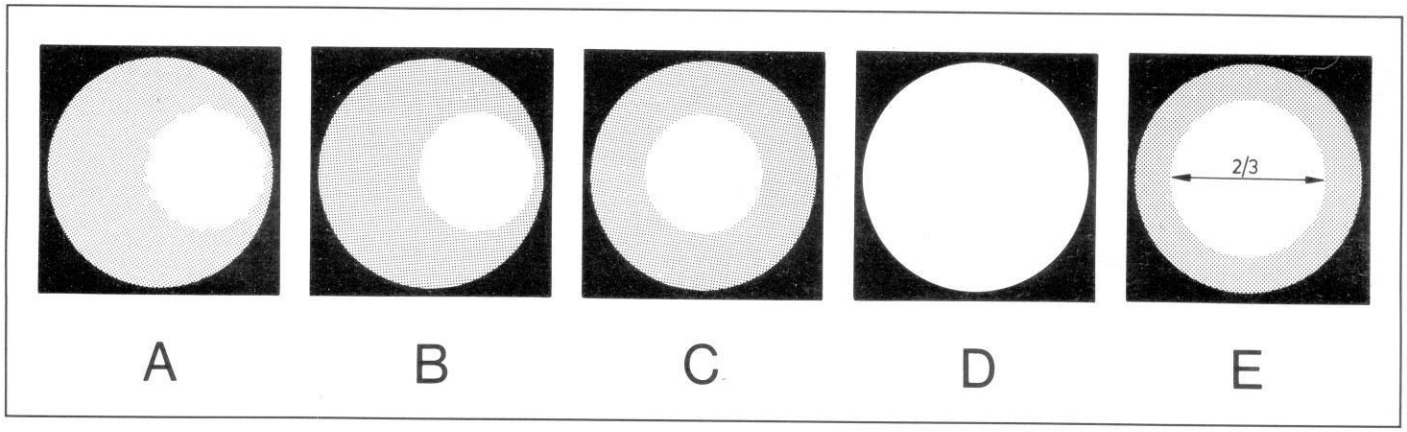

Special note
Almost all screws you need are 3 mm (M 3) or 1.5 mm (M 1.5) socket-head screws for which the hex socket wrenches with the red handles are supplied.

5

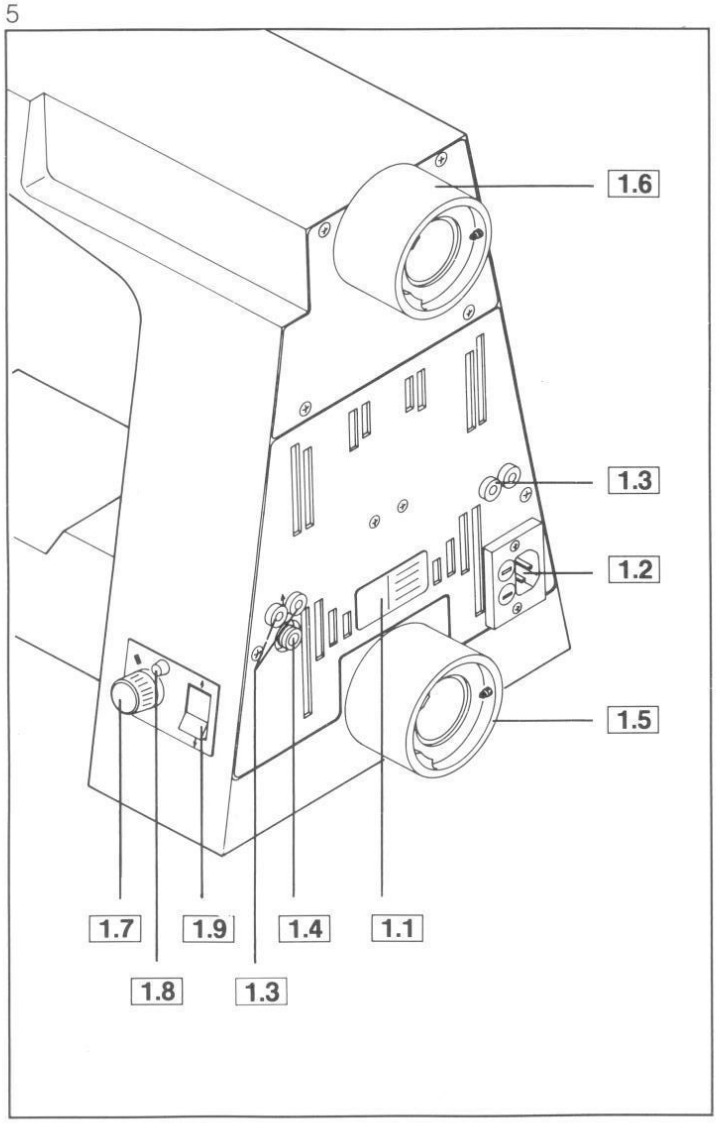

1.0 Lamp power supply

1.1 Integral 12V 100W lamp power supply.
Data on nameplate:
220 . . . 240 V or
110 . . . 127 V AC
50 . . . 60 Hz input voltage.
Stabilized output voltage: 0 . . . 12V AC.
Power consumption max. 170 VA.
The instrument is radio-screened and complies with VDE and UL regulations.

1.2 Power switch and, next to it, the fuses.
They are easily exchangeable after removal of the inserts with a screwdriver.
Spare fuses:
220 V +/–: T 3.15 A SB; No. 127.026
110 V +/–: T 6.3 A SB; No. 127.029

1.3 Sockets for 12 V/100 W halogen lamp; arrows indicate transmitted and reflected light.

1.4 Socket for control line to set the lamp to 3200 K independent of the position of switch 1.7 , which facilitates color temperature setting for photography.

1.5 Transilluminator port.
It contains a tube with heat-reflecting filter and diffusion disk for uniform illumination. This tube can be removed to observe the lamp coil in the pupil for lamp centration.

1.6 Reflected-light illuminator port.
Holder for 42 mm dia. filters is empty in fluorescence microscopy.

1.7 Power switch with lamp voltage setting potentiometer supplies 12V AC in stop position. The adjusted voltage can be read on the index.

1.8 Power signal lamp.

1.9 Toggle switch to change between transmitted and reflected-light illumination according to the arrows. (The change is possible with instrument power-on.)

2.0 Illuminator 100

The standard equipment includes a 12V 100W halogen filament lamp with socket and collector which connects to sockets 1.3 according to the arrow.
For high-performance fluorescence it is equipped with an HBO 50 mercury lamp with socket and 3-lens collector, which connects to a separate power supply (392642).

2.1 Light exit with dovetails to mount the illuminator on the microscope:
1. Loosen screw 1.5 or 1.6 sufficiently.
2. Insert dovetails of inclined illuminator in recess opposite the clamping screw, lower the illuminator on to the seating surface and secure it by tightening the screw.

The stand cover must be fitted on the microscope back before mounting the illuminator.

6

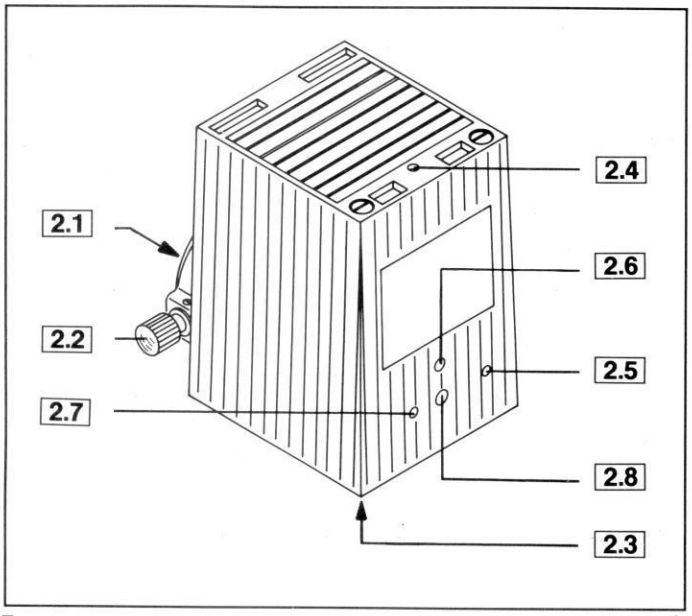

7

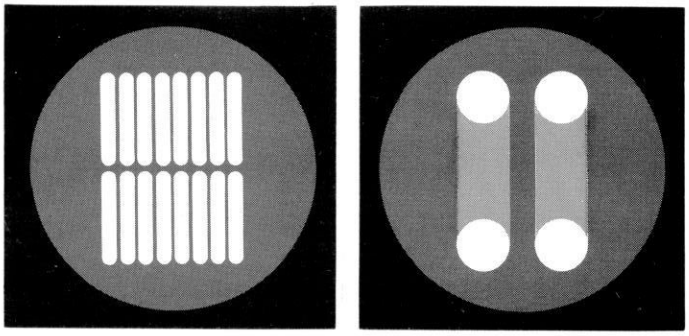

2.2 Knob for collector adjustment. The collector can be removed when this knob is pulled out (the pin of the knob engages a notch of the collector). The collector contains in front a holder for a 42 mm dia. heat-reflecting filter. The holder must be empty if the illuminator is used for UV blue fluorescence excitation.

2.3 Clamping screw of lamp socket (concealed, at the bottom of the housing).

2.4 Vertical lamp adjustment

2.5 Lateral lamp adjustment

2.6 Vertical adjustment of mirror image

2.7 Lateral adjustment of mirror image

2.8 Focusing of mirror image

The lamp is factory-centered. Should centering be necessary, proceed as follows:
1. Detach illuminator from microscope, switch on lamp and project image of coil on suitable surface (e.g. a wall at 1 m distance) by adjusting 2.2 .
2. If image and mirror image are other than in the left opposite Fig. correct with adjusting elements 2.4 to 2.8
3. Take out tube 1.5 , swing out all filters of magazine 3.2 , mount illuminator and adjust specimen (see page 5) with condenser 0.9 (with front lens) and 40× objective or similar one.
4. Without eyepiece the pupil with the coil images can be seen at the bottom of the tube. The coil images should evenly cover the pupil. Make corrections as said above.
5. Insert tube 1.5 , check pupil image again and optimize the adjustment with collector 2.2 .

With an HBO 50 lamp proceed as under 1. and 2. above, bu use the cathode focal spot and its mirror image instead of the coil (see right opposite Fig.). For the control in the pupil (items 3., 4. and 5. above) see 7.0 (page 17).

Important note:
Remove the collector before you take out the HBO 50 lamp socket (see 2.2).

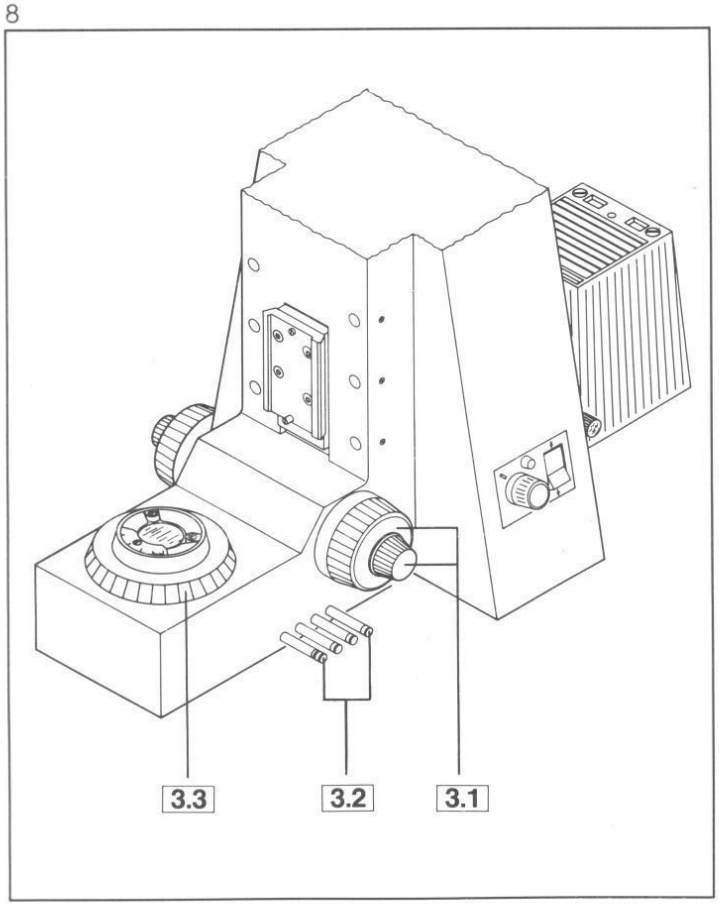

3.0 Stand base

3.1 Coaxial coarse/fine focusing control. It acts on a plate with dovetails which carries the stage carrier with the condenser carrier. The stage is lowered when the outer part of the control is turned towards the user. Overall travel (including fine focusing control): 25 mm. One turn of the coarse focusing control corresponds to ca. 2 mm travel; gear ratio of fine focusing control: 1:10. Index line on coarse focusing control can be used for a rough measurement of the object thickness:
1 scale division corresponds to ca. 2 µm.

3.2 Filter magazine in the illuminating beam path with 4 pushbuttons, from front to back:

- Black and dark-gray ring: 32 mm dia. neutral density filter, ca. 0.015
- Dark-gray ring: neutral density filter 0.06
- Light-gray ring: neutral density filter 0.25
- Blue ring: conversion filter 3200/5500 K

The brightness can be graded by the neutral density filters used singly or in sets. The transmittance of a filter set is determined by multiplication (e.g. $0.06 \times 0.25 = 0.015$, i.e. 1.5% transmittance).
The conversion filter converts artificial light of 3200 K into daylight of 5500 K.

If several filters are to be used at a time, the corresponding pushbuttons must be pressed simultaneously. Pressing the foremost button removes all filters from the beam path.

Exchange of filters in the magazine should be made by the maintenance service. (The bottom plate is removed. A filter – secured by a retaining ring – is accessible if all others are swung in).

3.3 Luminous field diaphragm. It is adjusted by a knurled ring. The (removable) dust cover glass accepts a 32 mm dia. filter. (This plane is not imaged in the image.)

9

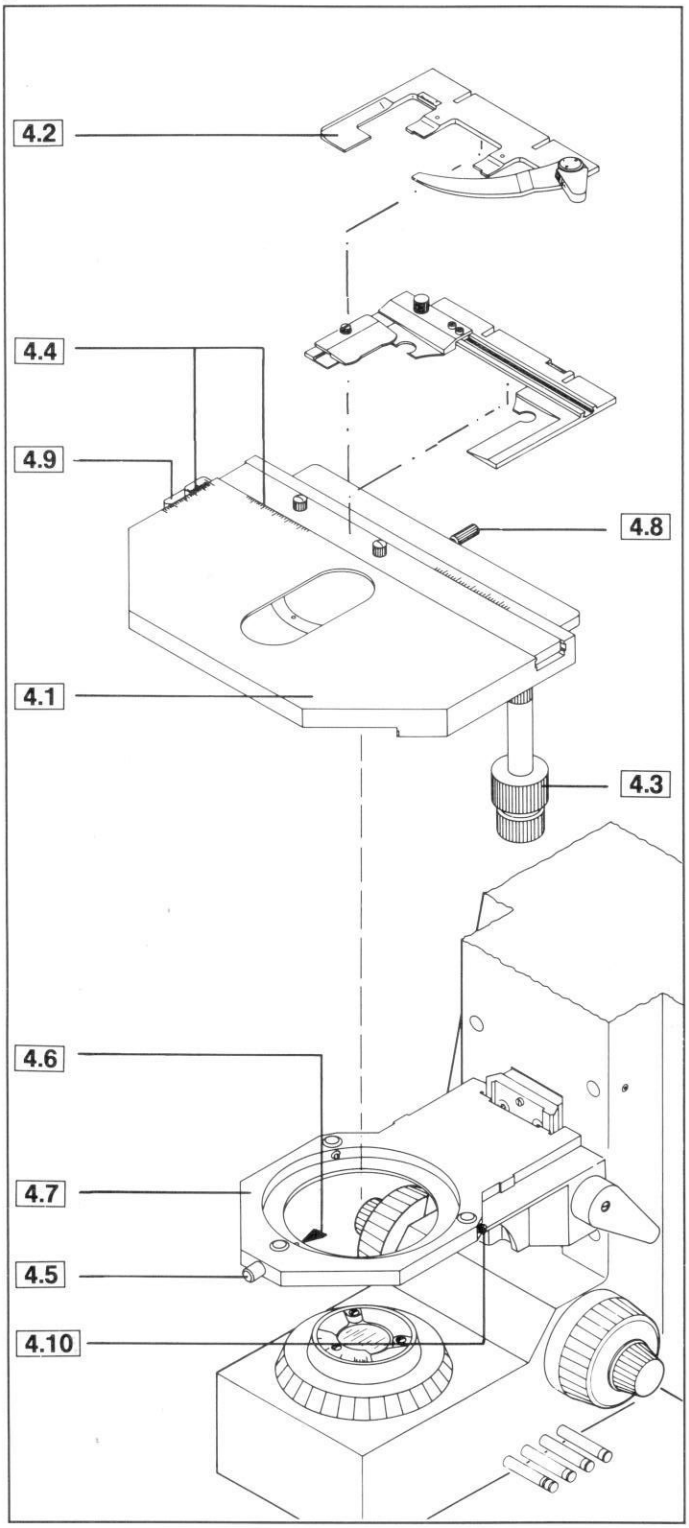

4.0 Specimen stage

4.1 Rotary centrable mechanical stage with controls either to the rear left (453501) or right (453502 4.3) is standard outfit.

4.2 Specimen holder for standard (26×76 mm) or 26×45 mm specimen slides (after loosening 2 knurled screws exchangeable for an adjustable specimen holder for 2 adjacent specimen slides or slides of other dimensions).

4.3 Coaxial controls for a 50×75 mm travelling range of the stage.

4.4 Graduations and verniers for the re-location of specimen areas or features.

A mechanical stage used as rotary stage (to turn a specimen for photography, to optimize contrast in DIC, etc.) must be mounted in stage carrier 4.7 turned through 180°. Loosen screw cap
4.5 . Pull stage forward (against spring pin 4.6) and take it (first at the back) out of stage carrier
4.7 . Turn stage through 180° and re-mount it: Press back spring pin 4.6 with the notch in the dovetails at the stage bottom; you can now put the stage down also at the back. Tighten screw cap 4.5 . Loosen clamping screw
4.8 . You can now turn the stage through ca. 100°.

4.9 Handle to turn the stage without accidentally moving the specimen.

The stage is factory-centered, which means that a feature once adjusted remains in the image center when the stage is turned, and does not migrate. Should it be necessary to re-center the stage: loosen screw cap 4.5 , plug small hex socket wrench into
4.10 . Correct migrations during stage rotation until the stage is correctly centered. Tighten 4.5 .

Other stages: Stage carrier 4.7 also accepts a special circular stage for polarizing microscopy.
Scanning stages are firmly mounted on carriers of their own.

10

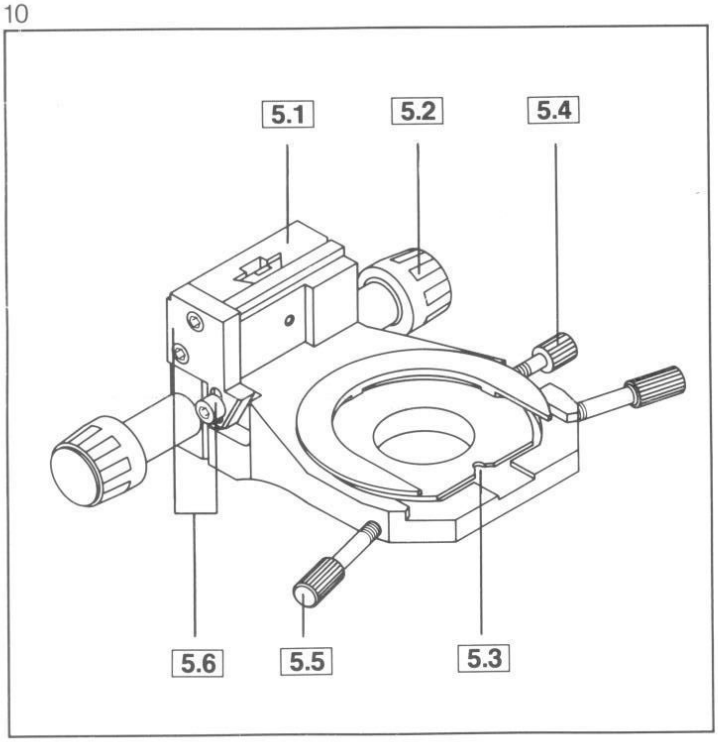

11

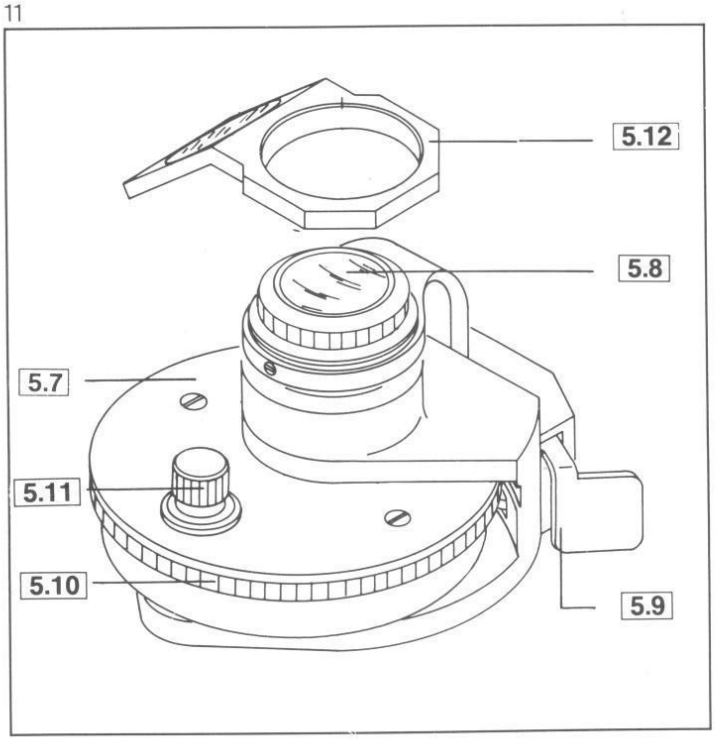

5.0 Condenser in

5.1 condenser carrier with:

5.2 Controls on both sides for vertical adjustment (max. 34 mm). The stiffness is factory-adjusted and should be changed only by the maintenance service.

5.3 Orientation notch for condenser

5.4 Clamping screw of condenser (used only for condenser exchange).

5.5 Two centering screws for the luminous field diaphragm image when adjusting the illumination (see page 5).

To prevent a specimen from being pressed out by the condenser the vertical condenser movement is limited by stop screw
5.6 which is adjusted as follows:

1. Adjust specimen (use a thick specimen slide)
2. Image the luminous field diaphragm (see page 5)
3. Move the condenser up by a small amount (diaphragm image becomes unsharp)
4. Loosen stop screw 5.6 with red-handle wrench – the stop pin will fall down – tighten it again. The specimen is secured.

The available condenser systems meet the high demands on the versatility of a large research microscope. Standard condenser is

5.7 Condenser system (445350) with brightfield insert.

5.8 Front lens, aperture 0.6 or 0.9.

5.9 Bilateral lever to swing the front lens in or out (for objectives 2.5× and 5×

5.10 Knurled ring for aperture iris diaphragm with aperture scale on top.

5.11 Fixing screw. When loosened and lifted the brightfield or any other insert may be removed. Condenser turrets must be pressed back for insertion.

Illumination of large object fields (objectives 2.5× and 5×): Without imaging of the luminous field diaphragm (Köhler illumination) diffusion disk
5.12 can be plugged on the front lens (pointing to the left). If the front lens is swung out and the diffusion disk is swung in you need not lower the condenser. The aperture diaphragm should be fully open, which is of advantage for routine work requiring quick change between low-power and detail investigations.

12

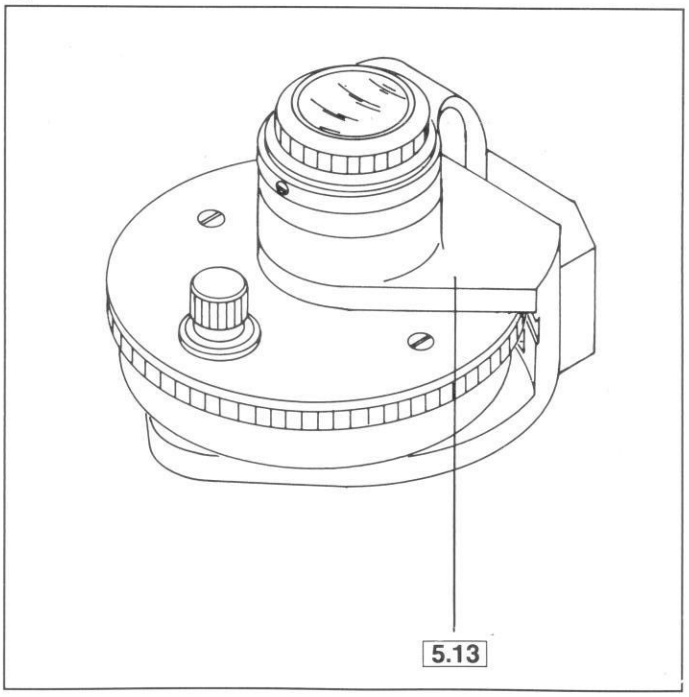

13

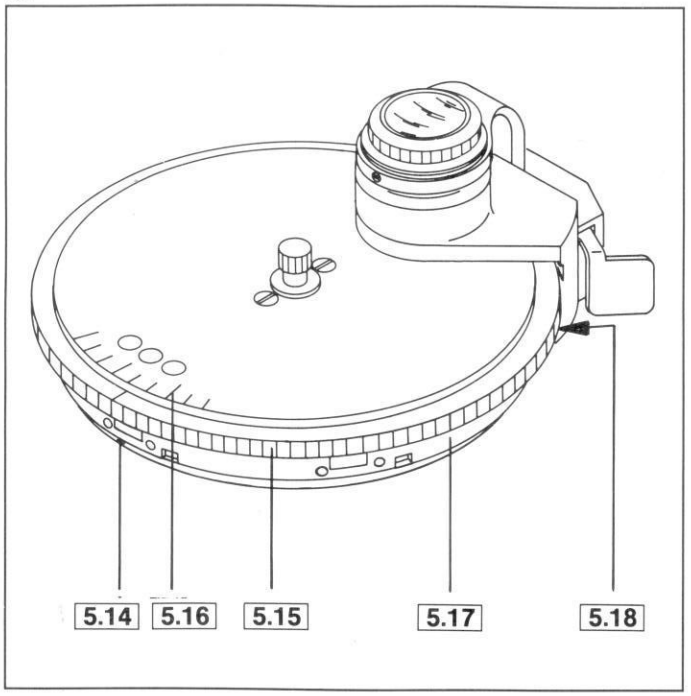

14

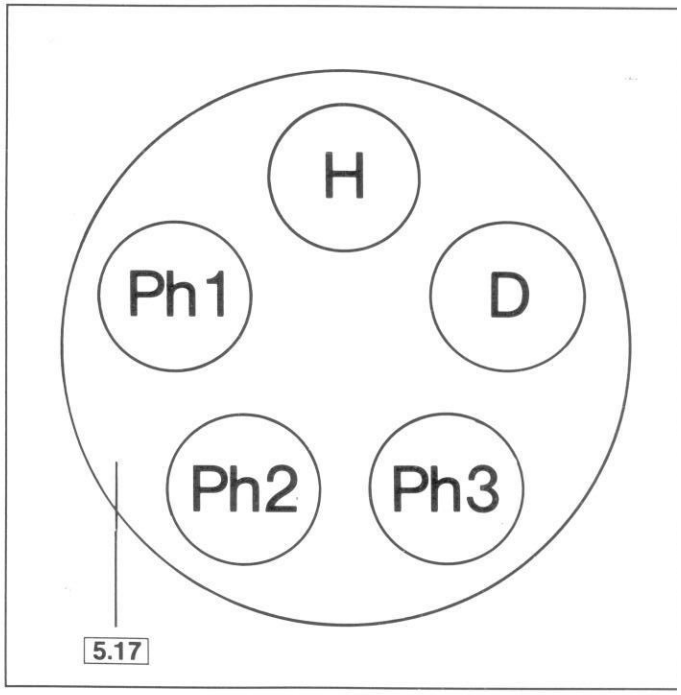

5.13 Condenser system (445351). It corresponds to 5.7, but the front lens is automatically swung out when the condenser is lowered. Lowering it further swings the front lens in again; it remains in this position when the condenser is moved up.

The 5 positions of the condenser turret are indicated by index
5.14 and allow quick change between different illumination and contrast-enhancement methods.

5.15 operates the aperture diaphragm, and the aperture is read on
5.16.

5.17 Condenser turret HD Ph (445366), provided for
- Brightfield (H)
- Phase contrast 1 (Ph 1)
- Phase contrast 2 (Ph 2)
- Phase contrast 3 and darkfield (Ph 3, D)

The initial centering of annular phase stops and darkfield diaphragms is made with the supplied 2 wrenches through the centering openings
5.18. (The condenser system (445350) has these openings before the right and behind the left lever 5.9.)

15

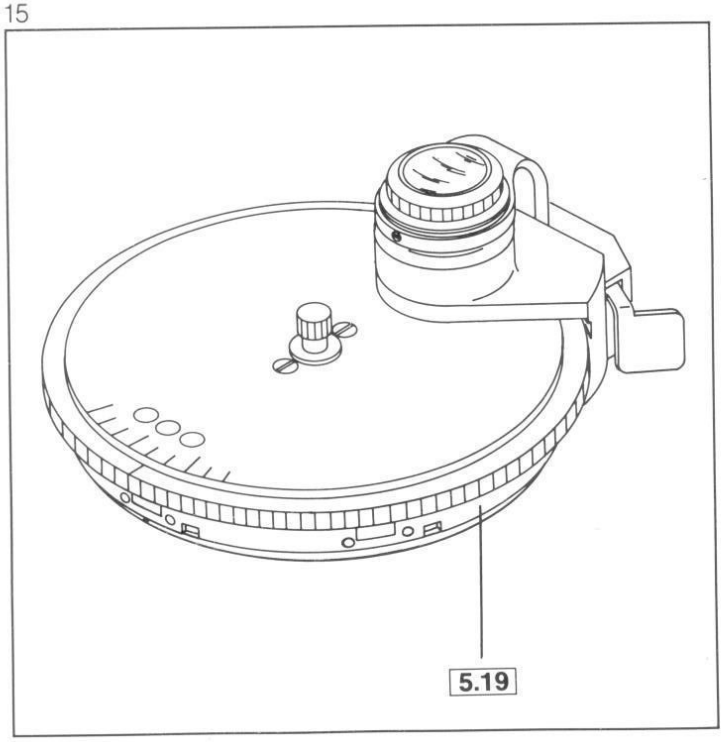

17

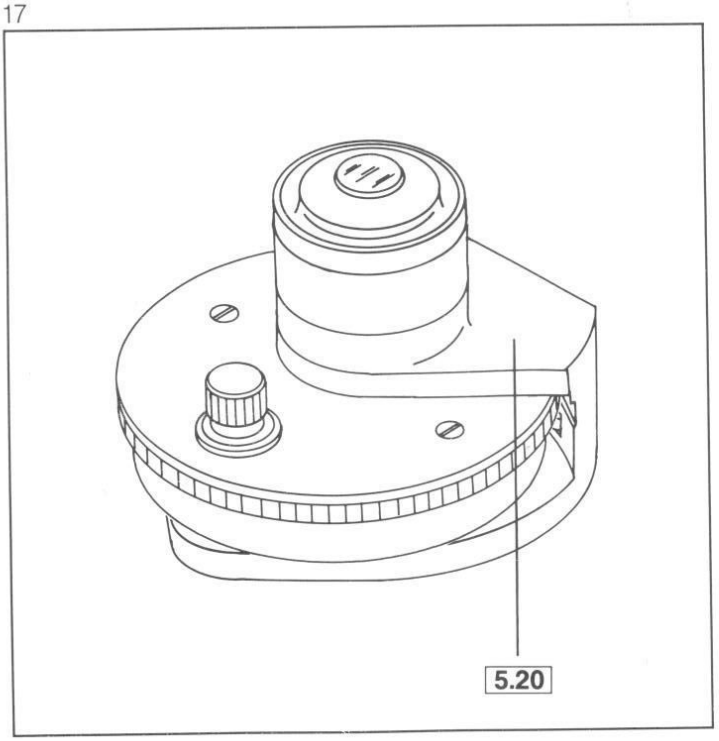

16

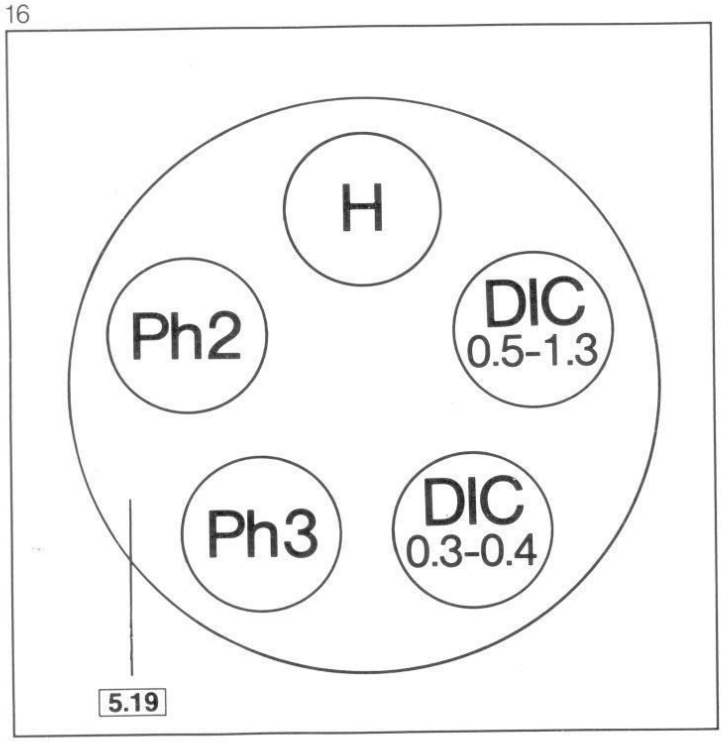

5.19 Condenser turret HD Ph DIC (445365) with standard equipment for:

- Brightfield (H)
- Phase contrast 2 (Ph 2)
- Phase contrast 3 (Ph 3)
- DIC .3 – .4
- DIC .5 – 1.3

The operating controls are like 5.17 .

5.20 Condenser system (445353 + 445357) for maximum illuminating aperture (1.4). There must always be oil between its front lens and the bottom of the specimen slide. The front lens is invariable but can be unscrewed to illuminate the fields of objectives 2.5×, 5× and 10× (the aperture will then be 0.24). This condenser system is suited either for brightfield or for brightfield and DIC.

18

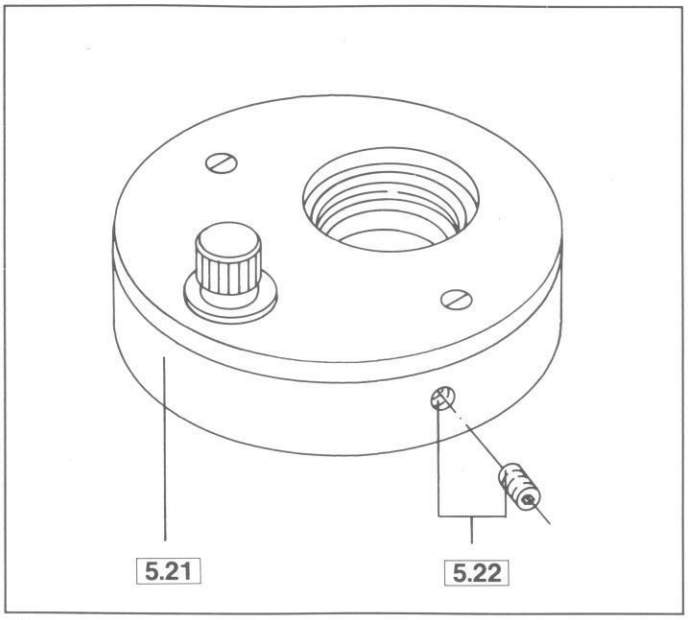

19

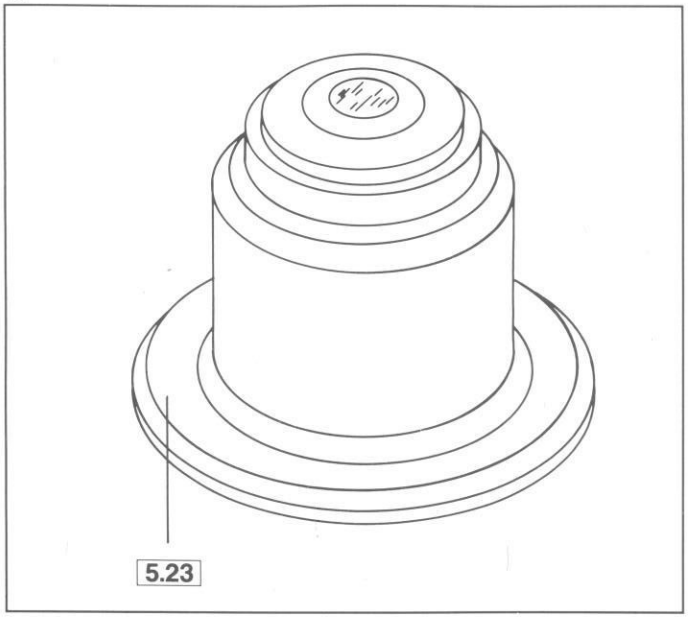

5.21 Darkfield insert (445363) fits in all condensers with 0.9 front lens and contains a darkfield diaphragm.
It has no iris diaphragm but can be centered instead with **5.22** .

5.23 Ultra condenser 1.2/1.4 oil (445315) for maximum apertures in darkfield. The objective aperture should be lower than 1.2, and stopping down with the objective iris diaphragm possible.

Concerning DIC: All optical elements and optic-containing components with ordering numbers or aperture values in red are virtually strainfree (Pol equipment) and therefore particularly well suited for DIC.

Optical condenser data

Without front lens (swung out or unscrewed)
all condensers (except darkfield condensers)
for objectives 2.5× . . . 10× have a
- numerical aperture (NA) of 0.24
- working distance (WD) of 23 mm
- luminous field of max. 11 mm dia.

The values in the table below apply to condensers with front lens:

NA		WD	Luminous field dia.	for objectives
0.6	0.6	6.8 mm	4 mm	10 . . . 100×
0.9	0.9	0.8 mm	2.8 mm	10 . . . 100×
1.4	oil 1.4 air 0.9	0.4 mm	1.9 mm	20 . . . 100×

With 10× objective in critical illumination you should work without front lens.

For the equipment of the condenser with phase contrast and other diaphragms see the table on page 34.

6.0 Image-forming components

6.1 Objectives, the most important elements of a microscope, must be kept meticulously clean, especially their front lens surfaces. (For cleaning breathe on the surface and wipe over it with a cotton wad. For a thorough cleaning see brochure 41-100 "Microscopy from the very beginning".)
The numbers and symbols engraved on the objectives, e.g. Plan-Neofluar 20×/ 0.50; ∞/0.17 signify: 20× = (individual) magnification, 0.50 = numerical aperture, ∞ = image distance, 0.17 = coverglass thickness in mm, for which the objective is computed.
(Individual) magnification multiplied by the eyepiece magnification (generally 10×) results in the microscope magnification. (The factor 1.25 or 1.6 must be considered if an Optovar 6.8 is used.)
NA × 1000 (500 in the above example) is the highest useful magnification; no more details will be revealed above this value. The numerical aperture is important in darkfield illumination for the choice of the darkfield diaphragms.

20

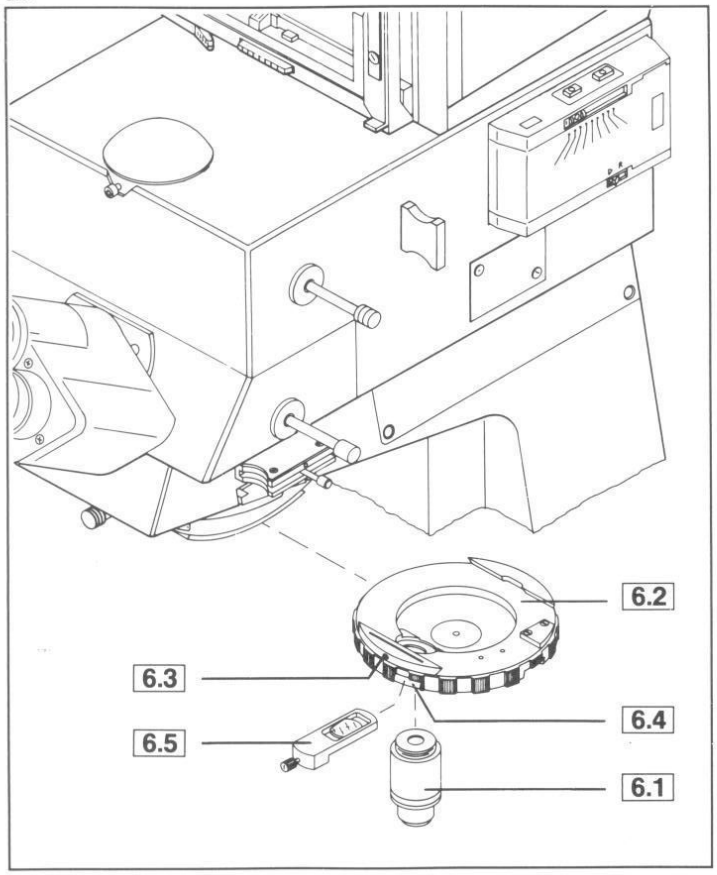

∞ reminds the user that these objectives cannot be used on microscopes with objectives bearing the number 160.
The coverglass thickness 0.17 mm must be the more observed the higher the numerical aperture of the objective. Certain objectives can be adjusted to different coverglass thicknesses (correction mounts): Find out, by means of a high-contrast specimen feature, in which position of the correction mount optimum sharpness is achieved (re-focusing will always be necessary).
Immersion objectives are insensitive to differences in the coverglass thickness.
Because of their short working distances 20× and higher-power objectives have spring mounts to protect the specimen. To prevent specimens from being contaminated by oil if the nosepiece with immersion objectives is turned, these can be "locked in" when the spring mount is in topmost position (don't forget to disengage them from "lock-in" position!).

The air between the coverglass and an immersion objective is replaced by a liquid, generally a special oil. Some training is needed to achieve a bubble-free layer. Some microscopists prefer to turn the objective from the side into the oil drop on the coverglass, others recommend to lower the objective from "lock-in" position of the spring mount. It is recommended to always control the exit pupil, preferably with the Bertrand lens 6.12, a procedure which instantly reveals any bubbles. If the bubbles have not disappeared even if the objective has been turned in several times, clean the specimen and repeat the procedure.

6.2 Nosepiece. After loosening screw
6.3 it can be moved to the right and taken off (e.g. to check the front lens for cleanliness). (It cannot be detached if 6.17 is not empty).

A microscope equipped for DIC, too, features in the knurled ring of the quintuple nosepiece
6.4 slots for the
6.5 DIC slides. They must snap in when inserted (designation face up). (See also DIC adjustment on page 27.) Even if you are not working in DIC, you may leave the DIC slides in their slots (dust cover), provided the polarizer beneath the condenser is swung out.

21

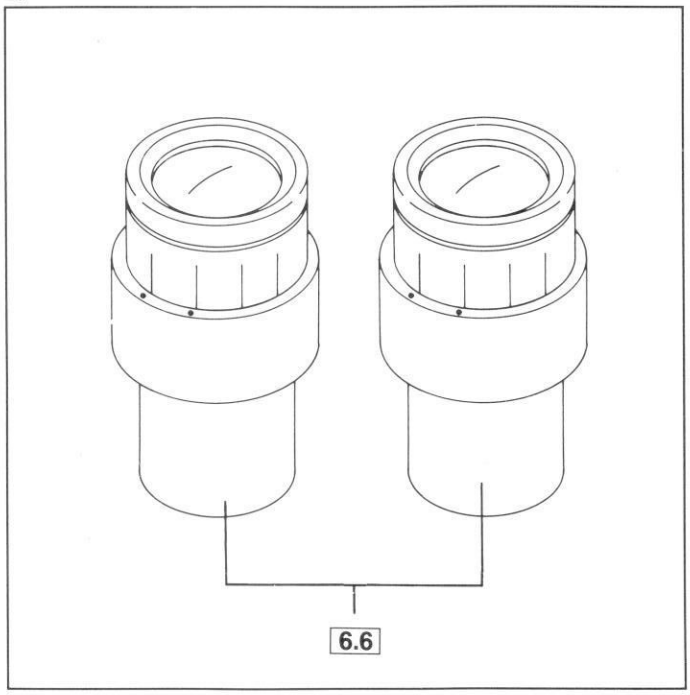

22

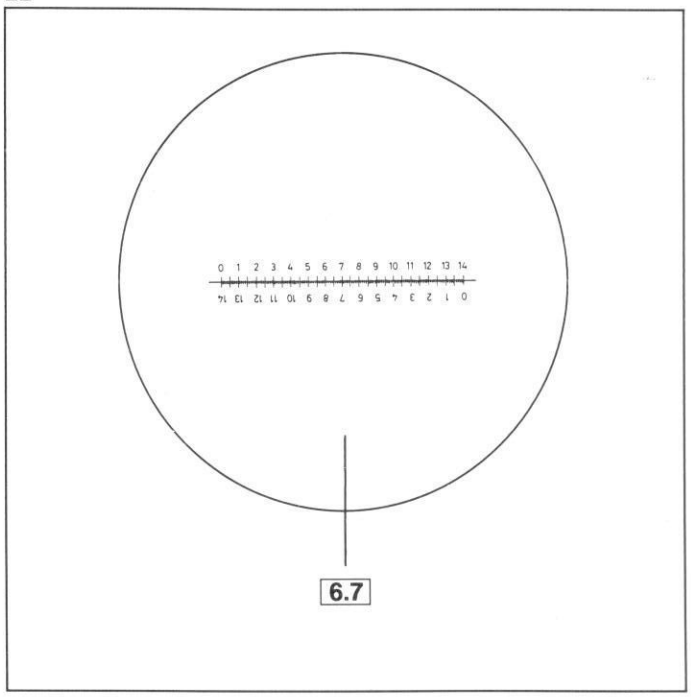

6.6 Eyepieces with 10× magnification and field-of-view number 25 or 16× magnification and field-of-view number 16 produce angular fields of 54°, are equally well suited for eyeglass wearers (Br), and carry an exchangeable rubber ring to protect eyeglasses (folding eyecups are available under ordering number 444801). Both eyepieces are focusing eyepieces (foc). The eyepiece position is secured by a screw which engages a notch in the eyepiece tube. This is important especially for reticles. The diopter scale of the eye lens is set to 0 (white dot) for emmetropic users and eyeglass wearers. If your eyes have different powers or you want to work without eyeglasses, turn in the camera focusing reticle [9.23] and adjust the focus for each eye. If you have a "cylinder" in your eyeglasses you should always wear them for microscopic work. For critical work, especially at low magnification, it is recommended to plug a telescope attachment on the eyepiece for focusing on the camera focusing reticle and on the specimen.

6.7 Reticles in the eyepiece diaphragm plane are for measurement. They fit only in focusing eyepieces. The slight displacement of the image they cause is considered by the zero position on the diopter scale indicated by the red dot. Exchange of reticles should be left to specialists because of the high demands on cleanliness and exact alignment. (The lower part of the eyepiece can be unscrewed; the scale-bearing surface of the reticle must face down!)

6.8 Optovar slide (451990) with the factors 1× (middle), 1.25× and 1.6×, for quick magnification change fits into

6.9 if spring pin

6.10 was pulled out, which provides for the stops in the middle and at either end.

23

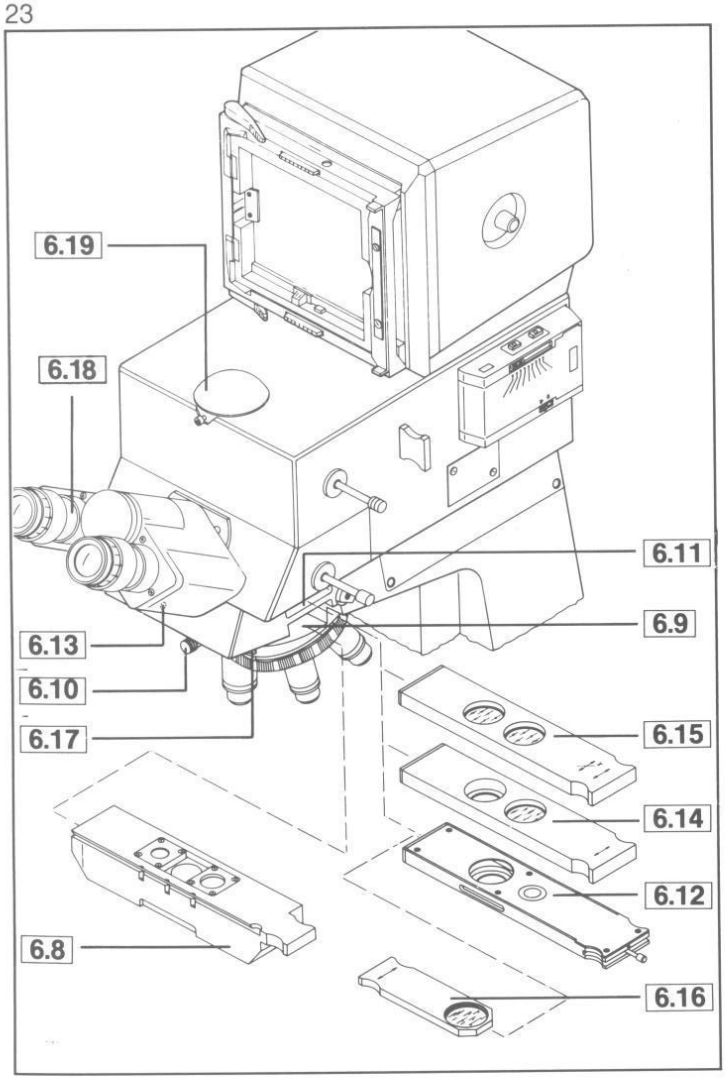

6.11 Slot for

6.12 Bertrand lens slide (453670) for convenient observation of the objective pupil, especially for phase-stop centering. Loosen screw 6.13 on the stand so far that the slide can be inserted, and tighten it so far that it moves smoothly between the stops. The Bertrand lens which is focused by a lever is brought into the beam path when the slide is moved to the left.

Accessories for DIC

Slot 6.11 accepts the Bertrand lens slide 6.12 for bright-field/phase contrast microscopy, but analyzer 6.14 (453655) or a slide with additional analyzer with lambda-plate 6.15 (453656) for DIC. A white line ensures correct orientation.
To change quickly between Bertrand lens (Ph) and analyzer (DIC) we offer both in a set: 6.12 (453670) and 6.16 (453665); the analyzer in the Bertrand lens slide can be swung in and out to the left, offering:

- free light path (slides pulled out to the left and right)
- analyzer in beam path (left slide pushed in)
- pupil observation (right slide pushed in)

6.17 Slot for auxiliary objects and compensators.

6.18 Binocular tube 25 of Axiophot It is firmly mounted on the camera module. PDs between 55 and 75 mm are adjusted by turning the tube halves in or out. Write down your PD if the tube is used by several persons.

6.19 Port for TV or special camera. TV and cine cameras with C mounts are fitted with standard C adapter (452995), without eyepiece. The adapters are parfocalized with the integral reticle.

7.0 Fluorescence equipment

7.1 Attachable fluorescence illuminator with 3-lens collector and HBO 50 mercury lamp* supplied from a separate power supply are standard outfit.

7.2 Three filter slots. A slide is generally inserted in the last to either interrupt the beam path (fully inserted), bring a red-attenuating filter BG 38 in the beam path or providing free beam path (middle position). The other two slots accept filter slide A with one unoccupied and one filter position (18 mm dia.) for an additional exciter filter. A heat-reflecting filter KG 1 (it does not influence UV excitation) is invisible from the outside.

7.3 Lever of luminous field diaphragm.

7.4 Screws to move luminous field diaphragm.

7.5 Reflector slide 3 FI fits like Optovar magnification changer 6.8 in brightfield, and, like 6.8 has 3 positions; the middle position will be left free for brightfield or phase contrast observation, the others accept suitable exciter-filter/chromatic-beam-splitter/barrier-filter sets. For details see pages 28 and 36.

* If you think that the lamp needs adjustment proceed as follows:
1) Open light-tight slide 7.2 and set reflector slide to blue excitation (e.g. filter set 09).
2) Unscrew objective and check the light source image on a piece of paper ca. 20 mm beneath the empty nosepiece opening in accordance with page 7.
3) Should corrections be necessary proceed as described on page 7.

24

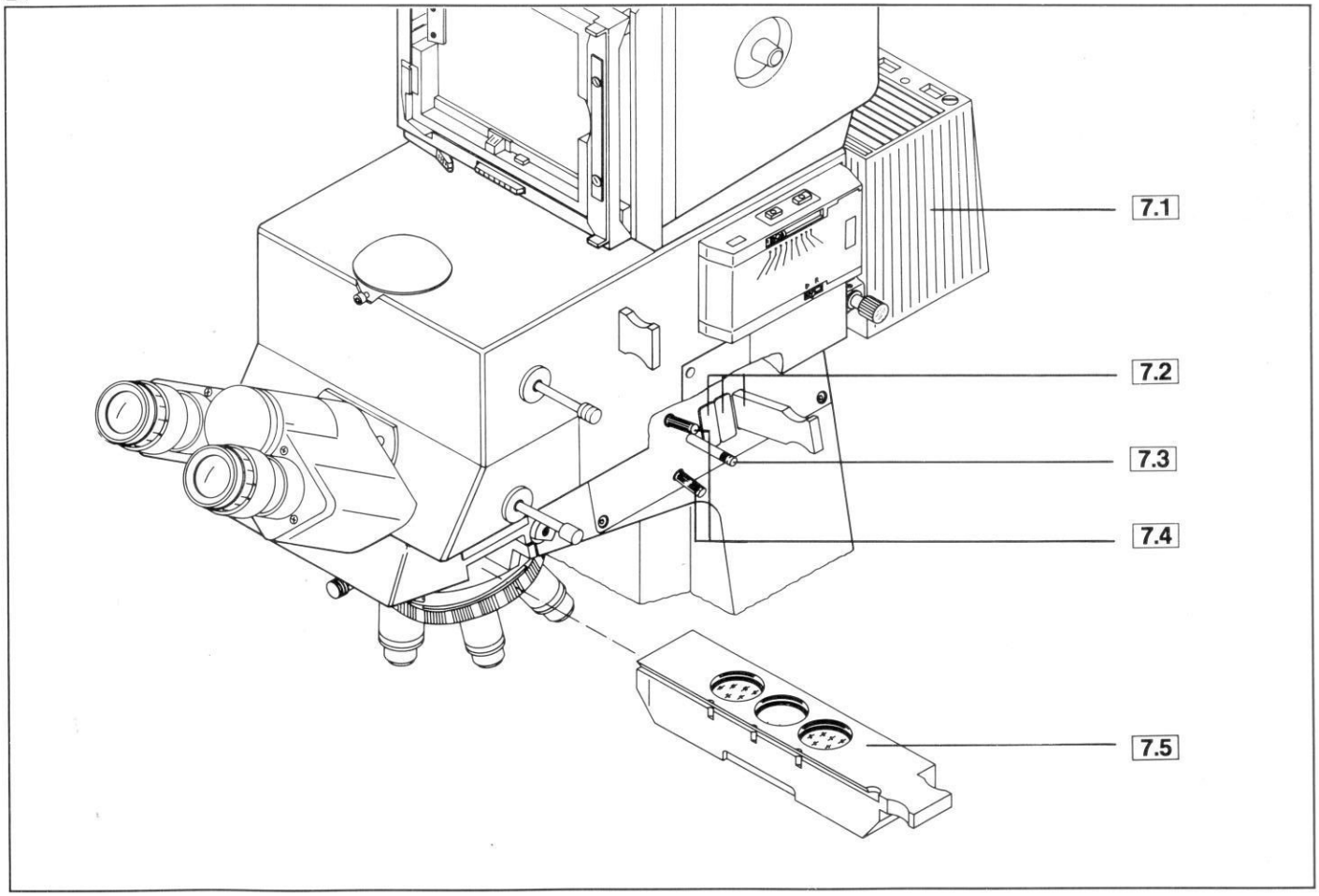

8.0 Camera module

The integrated camera module is the most outstanding feature of the Axiophot.

The most important technical features:
Two 35 mm and one large-format camera with automatic exposure control, and (35 mm cameras): automatic film advance, automatic trailing of newly loaded film and automatic rewinding.

25

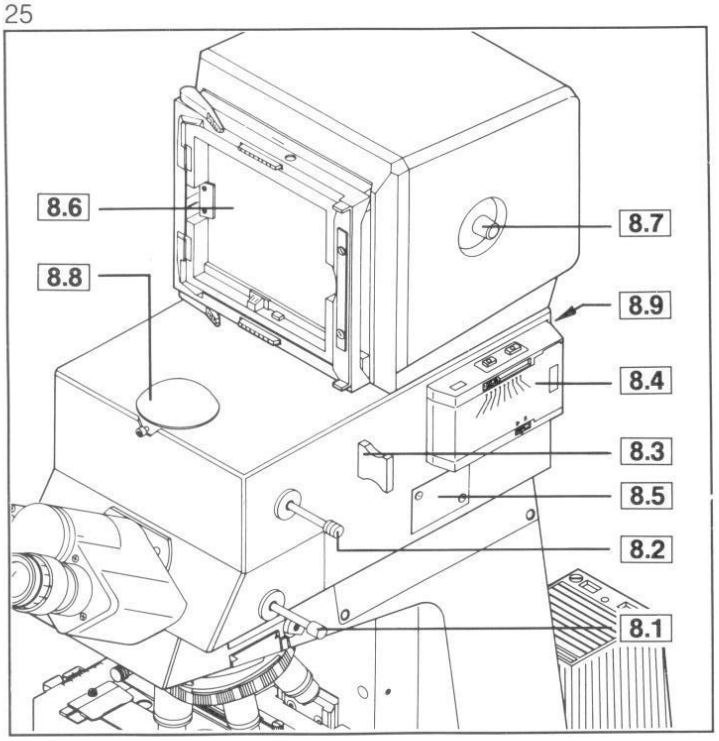

26

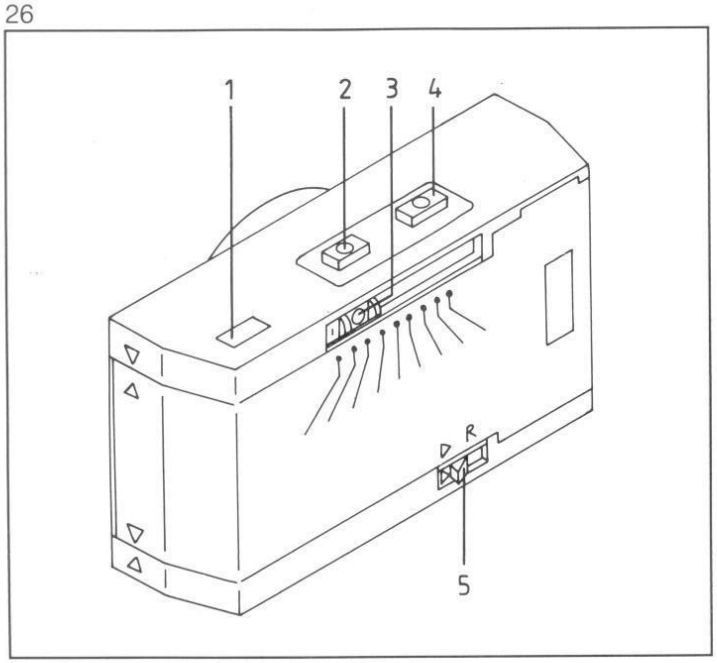

Decimal display of exposure time, down counting during exposure.
Exposure automatically extended for longtime exposures (compensation of reciprocity failure) in 9 steps.
Spot or integral measurement optional.
The automatic exposure time can be fixed for reference exposures.
Multiple exposure.
Exposure adjustment within a range of max. 3 shorter and 2 longer exposure values, with a minimum interval of 1/3 exposure value.
Automatic exposure series with pre-selected corrections, for test series, etc.
Binocularly visible luminous frame of variable brightness.
Each negative can be imprinted with data and scale bars.

The 35 mm film cassette Axio Mot uses normal cartridges 135 (visible in window), the 4″×5″ camera back accepts sheet film cassettes, Polaroid sheet film and filmpack cassettes (545 and 550) as well as roll film cassettes on plate for international camera back.
Image scale on film = objective magnification multiplied by:
2.5 for 35 mm film
10 for large format 9×12 cm/4″×5″

8.1 Beam splitter I
Pushrod pushed in: observation only (100% of the light to the tube)
Pushrod pulled out to 1st stop: 20% of the light for observation
80% to beam splitter II
Pushrod pulled out all the way: no observation through the tube
100% of the light to beam splitter II

8.2 Beam splitter II
Pushrod pushed in: all the light relayed to the cameras
Pushrod pulled out to 1st stop: 50% to the cameras,
50% upwards
(e.g. for TV)
Pushrod pulled out all the way: all the light relayed upwards
(for TV, etc.)

Standard positions:

Observation alone

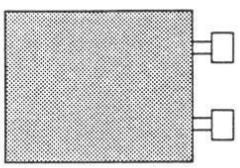

Observation and photography

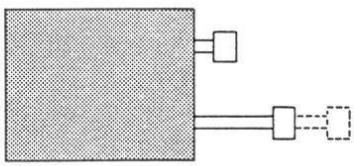

8.3 Scale carrier containing scale bar with length. Both are imprinted on the negative if the carrier is pushed in all the way. A separate scale carrier is required for each objective scale (visual control is possible only on the large-format groundglass).

27

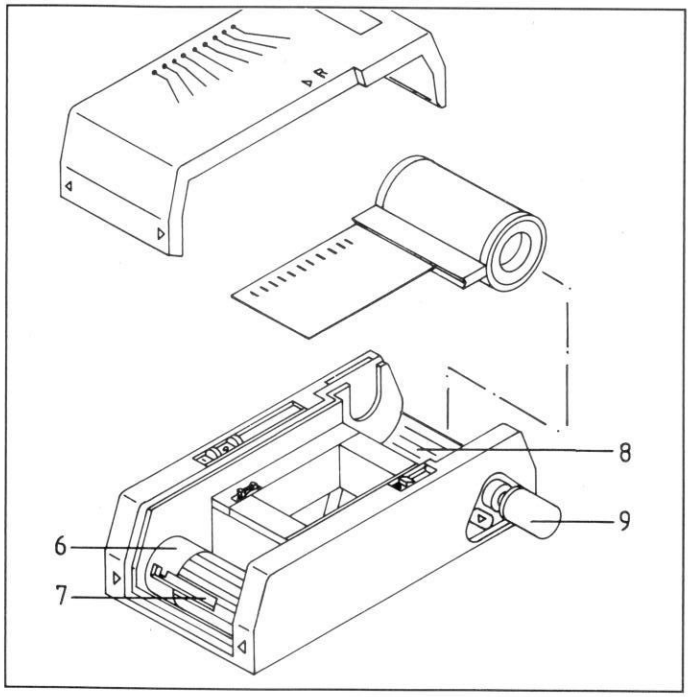

28

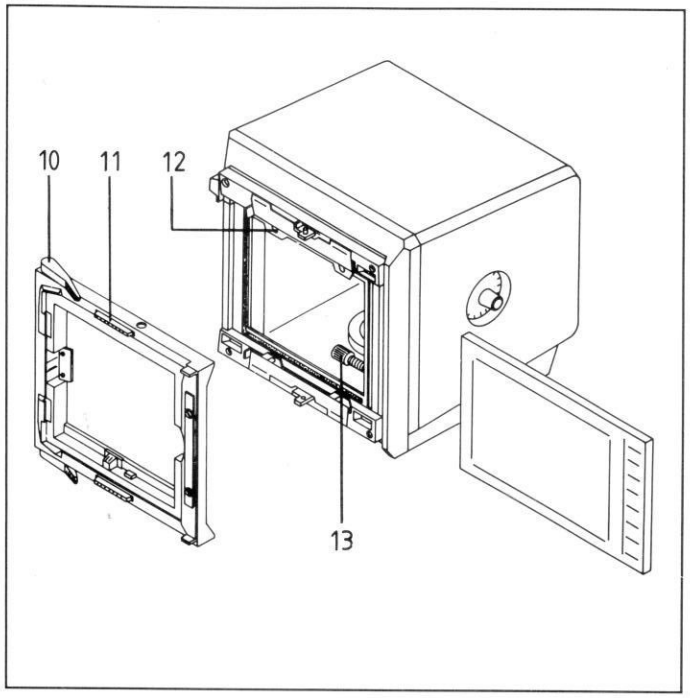

8.4 35 mm film cassette Axio Mot. To detach it from the instrument press key (4) (Eject) and pull off the cassette. Setting the film speed: (3) can be shifted when (2) is pressed. The adjusted ASA value is automatically transferred to the control panel.

Loading the film: move lock (9) (bottom) in the direction of the arrow. The cartridge is ejected, the back can be removed. Load cartridge in (8), press down (9), insert film leader in slot (7); the sprocket teeth must catch the perforation; tighten film by turning the take-up spool (6) outward (possible only if rewind slider (5) is set to R, which is done automatically); let left side of camera back engage (arrows) and lock in its right side. Mechanical counter (1) is set to S (Start).

Mounting the cassette: hold the cassette on the sides and attach it to the port. With control panel power-on (camera selector to this specific port) the leader is advanced automatically; the counter is set to 0.

Rewinding the film: operation of slider R (5) automatically rewinds the film. Automatic resetting when mounting the camera back. When the film is taken out and the camera back put on, slider R returns automatically to normal film advance position.

8.5 Replacement of filament lamp for luminous frame illumination.

8.6 Large-format groundglass and cassette holder. Cassettes for international camera backs are slid behind the large-format groundglass which can be lifted with lever (10). To take off the groundglass: press (11) and move it to the right; mounting is made accordingly. Most cassettes are not held by the groundglass but clamped with bolts (12). Microprojection for small audiences: on control panel: [4″×5″] ; [T] ; [START] opens the shutter for observation; pushing [START] again closes it.

8.7 Film speed setting of large-format camera: if [4″×5″] lights, the adjusted ASA value is displayed on the control panel.

Knurled screw (13) for the positioning of data on different film formats becomes accessible to the lower right after removal of groundglass [8.6] . Control of positioning on the groundglass (ASA 25: it lights for 1 s).

8.8 Port for TV camera, see [6.19] .

8.9 Connection of camera control panel, see page 20.

9.0 Camera control panel

9.1 Power input. The voltage setting (white pin pointing to one of 4 voltages) must coincide with the local mains voltage.
A change is made as follows:
- Put a small screwdriver or similar tool in the recess (1) between jack and fuse plate and lift out plate.
- To the right in the small slot at the black part you can now pull out a square board (2). The adjusted voltage is indicated on the board opposite the black plastic part (3). The other available voltages are imprinted on the remaining 3 sides.
- Shift the plastic part (3) so that it engages the recess opposite the new voltage.
- Slide the board into the slot, legend facing to the left. Put on the fuse plate; the white pin will now indicate the correct voltage.
  The right fuse must be inserted (see page 38).

9.2 Power switch.
Settings with power-on:
- Camera selector refers to the last-used camera
- The corresponding values of counter (COUNT), ASA, reciprocity code number (RECI) are stored or automatically set (ASA, COUNT).
- Automatic exposure control (integral measurement) 9.8 . 0 is set automatically with Exposure Adjustment 9.13 .

9.3 4-pin socket for microflash (in preparation)

9.4 2-pin socket for remote control (in preparation)

9.5 3-pin socket for halogen lamp setting to 3200 K (control line to 1.4)

9.6 Connection to camera system 8.9 .

9.7 Camera selectors: 35 R 35 mm cassette to the right, 35 L 35 mm cassette to the left, 4″×5″ large-format camera 9×12 cm/4″×5″. The following values remain stored for each camera port:
- ASA (film speed setting)
- RECI (reciprocity code number)
- COUNT (frame counter setting)

29

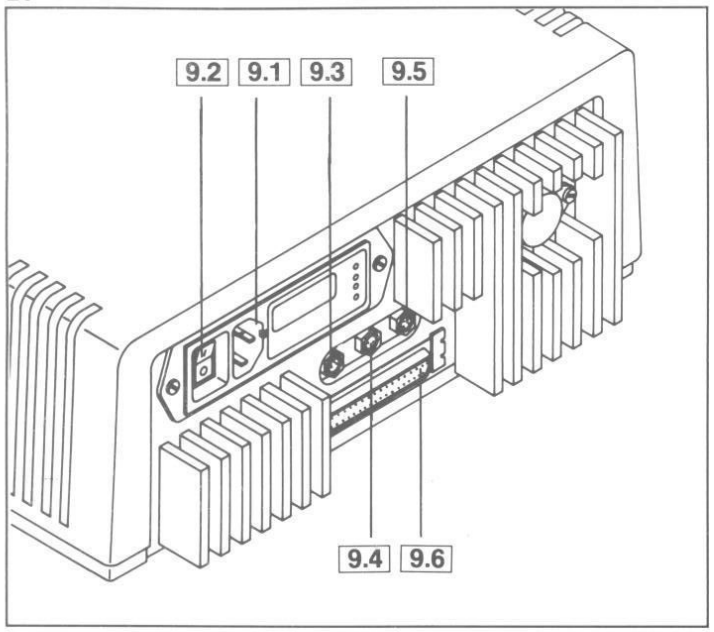

30

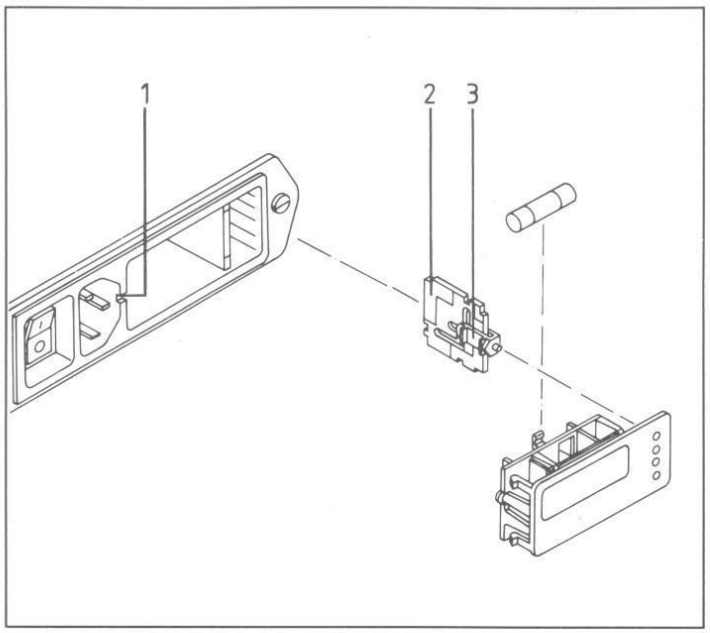

31

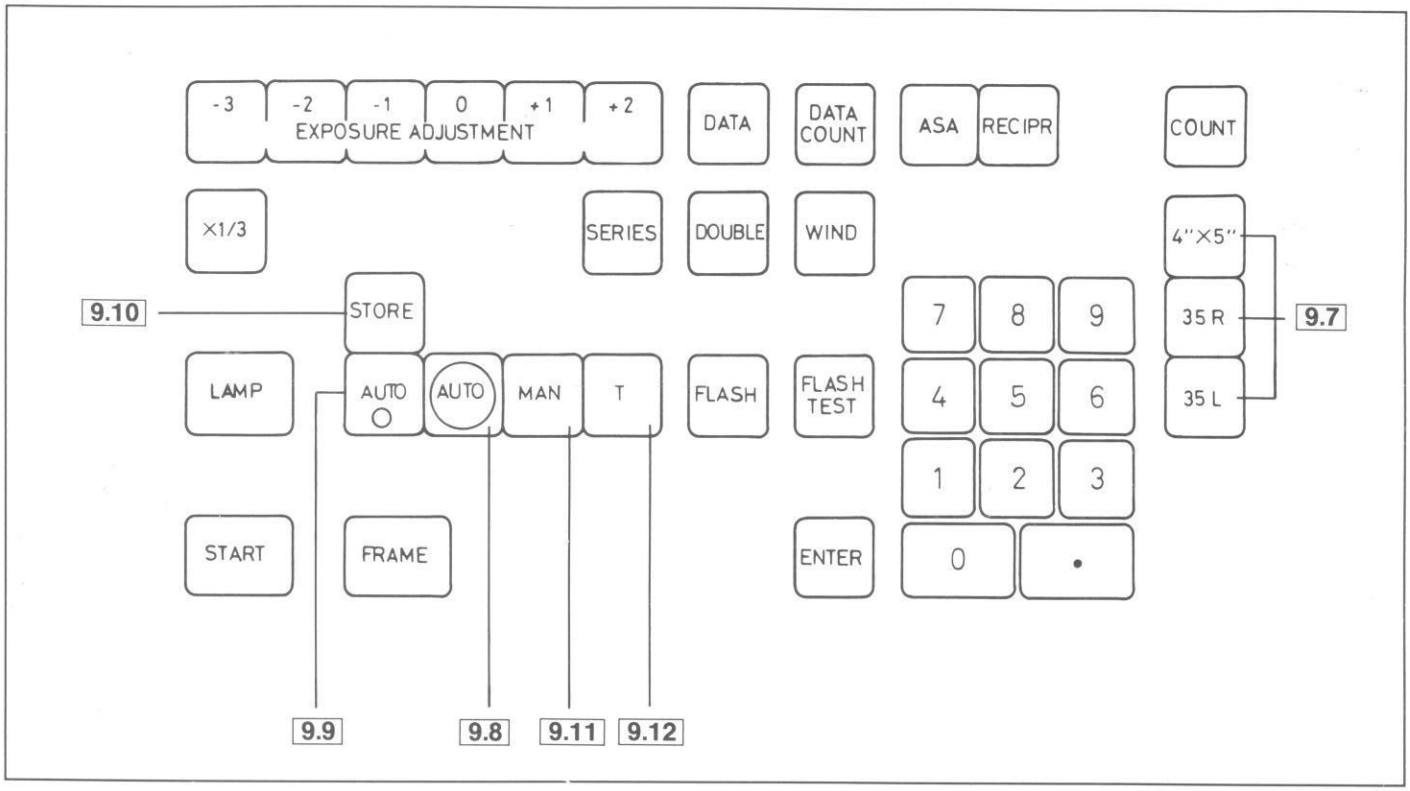

9.8 Exposure measurement. AUTO automatic; normal exposure measurement: integral (area) measurement using a circle of ca. 22 mm dia. in the 24×36 mm image field. It is operative automatically with instrument power-on because it is generally optimal.
For exceptions see → 9.9 .

9.9 Exposure measurement. AUTO automatic; point measurement using ca. 1% of the total image area which corresponds to the circle in the center of the crosslines of reticle → 9.23 .

Used if the object is surrounded by extended dark areas. Integral measurement would then cause too long exposure times (darkfield illumination, polarization and fluorescence). The reverse case may also occur.

9.10 STORE stores the exposure time if
1. after a spot measurement (→ 9.9) the object is to be moved from the center for photography,
2. extended specimen areas are to be covered by a series of exposures; without storage of the exposure time differences in the area coverage of the object would cause different exposures and, for example, different brightness of the background,
3. different intensities are to be represented by multiple exposure (→ 9.20), e.g. in multiple fluorescence.

9.11 MAN referring to manual, non-automatic exposure. The digit field lights when the key is pushed; select the exposure time and enter it with ENTER .

9.12 T (Time). The shutter opens when T is pushed and you release with START . Pushing START again closes the shutter. 9.30 displays the shutter speed in whole seconds. Used for longtime exposures and to relay the light to the groundglass of the large-format camera.

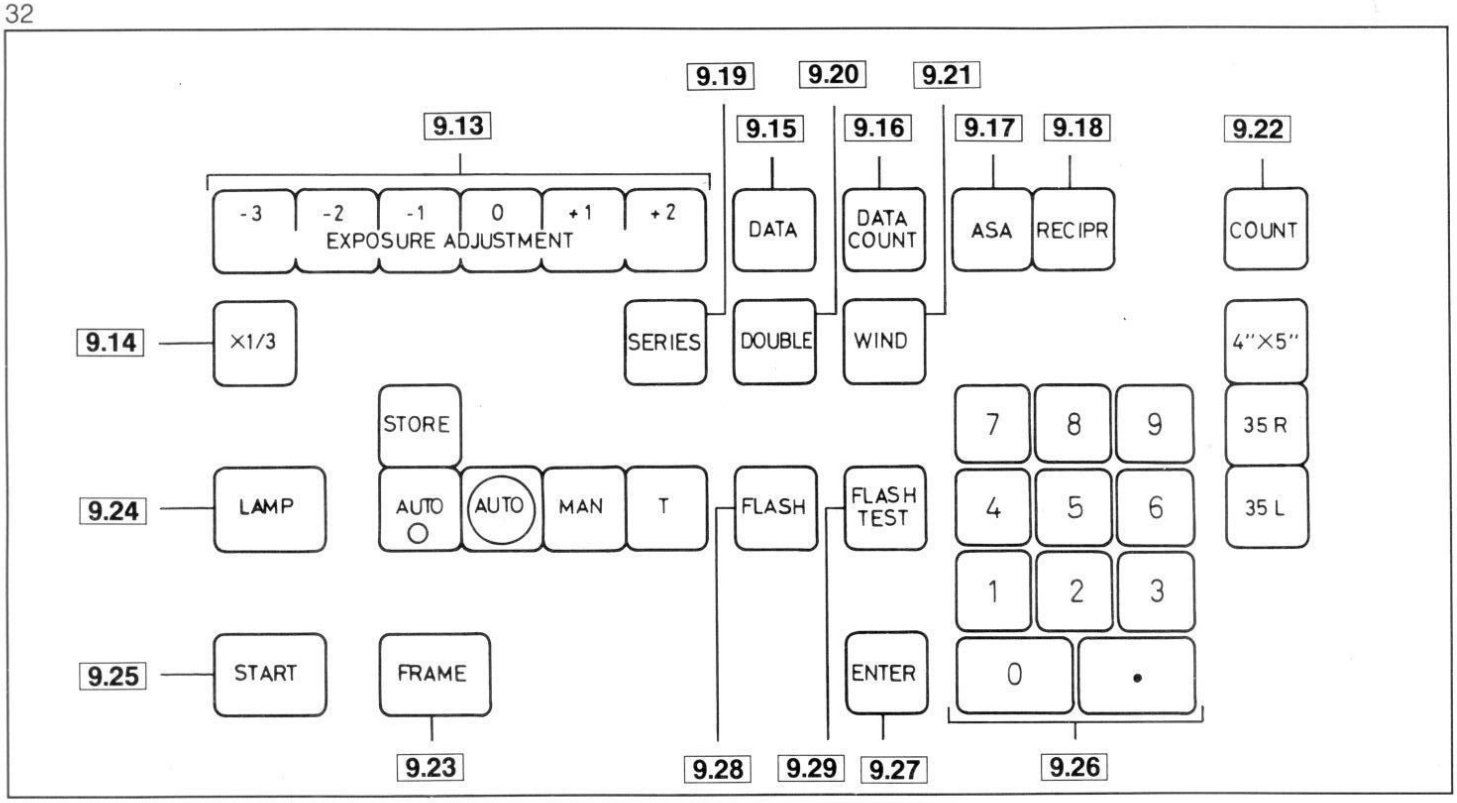

9.13 Exposure adjustment to correct the exposure in whole steps. 0 signifies that no correction is necessary, and [0] is automatically set after instrument power-on. [+1] signifies that the exposure will be 1 exposure value longer than suggested by the automatic control (double exposure time; negative will be darker, slides and Polaroid pictures brighter). Analogously, [−1] signifies automatically adjusted exposure time x 1/2, [−2] x 1/4, [−3] x 1/8.

Applications:

1) Automatic exposure control converts the brightness of an object into mean brightness of the image, because the instrument cannot identify an object as snow or dark forest, for example. The exposure adjustment prevents snow, for example, from becoming too "gray" in the slide because of underexposure. Referred to microscopy it means that a bright object will be bright also in the image if the exposure time is doubled with [+1] . Minus values must be adjusted for dark objects. For fluorescence exposures see page 31.
2) It may be necessary to use the exposure adjustment for any or all of the following reasons: special development, long storage, or exceptionally intensive filtering (to which the light sensor may not be adapted).
3) If you are uncertain whether critical object features are optimally projected or printed, use also longer and shorter exposure times besides the one suggested by the automatic system, a procedure which is facilitated by the possibility of automatic exposure series [9.19] .

9.14 [x1/3] Exposure adjustment in 1/3 steps. When this key is pressed the steps given under [9.13] are reduced to 1/3 of the indicated value ([−1] signifies that the exposure time is 1/3 step shorter).

9.15 [DATA] for the 4"×5" camera. A number or sequence of numbers input after pressing this key, followed by [ENTER] is imprinted on the large-format negative (see also [8.7] !)

9.16 [DATA COUNT] . Like [9.15] , but 1 is added to each input number for consecutive numbering of exposure series.

9.17 [ASA] for the 4"×5" camera gets ASA display into [9.34] instead of DATA.

9.18 [RECIPR] for compensation of reciprocity failure. The sensitivity of emulsions decreases if the illumination intensity drops to values which require exposure times of 1 s or more (reciprocity failure). If no compensation is made, long exposure times will result in underexposures. The control panel makes the compensation automatically.
The decrease in sensitivity is not the same for all emulsions, and automatic compensation is therefore graded in 9 steps. Which code number applies to the film you use is said on page 32.
Input of the code number: [RECIPR] ; digit field lights; key in code number; [ENTER] .

9.19 [SERIES] . For automatic exposure series with different exposure adjustment values (see also point 3) under [9.13]). [SERIES] (flashing); input exposure adjustment values in desired sequence; [ENTER] . The exposure series is started with [START] .

9.20 [DOUBLE] . Double-exposure key.
[DOUBLE] before release with [START] stops automatic film advance after exposure.

Applications:
1) Multiple exposure of one and the same object feature with different illumination methods or fluorescence filters, etc.
2) Multiple exposure to imprint scales, marks, overlayed nets, etc.
   NB: The exposures will superimpose each other at least in some areas; shorten the single exposures e.g. with -1.

9.21 [WIND] for blank exposures, and interrupting a current exposure.

9.22 [COUNT] . Frame counter setting. 0 is set automatically when a new 35 mm film is loaded; counting parallel with the mechanical counter of the cassette. To set 0 for 4″×5″ camera and in cases other than film start: [COUNT] ; [ENTER] . *)

9.23 [FRAME] . The photo reticle is displayed as luminous frame. The display disappears automatically during exposure. The frame brightness is variable to comply with the image brightness. Key held down: the brightness changes continously; key released: the actual setting is fixed.

33

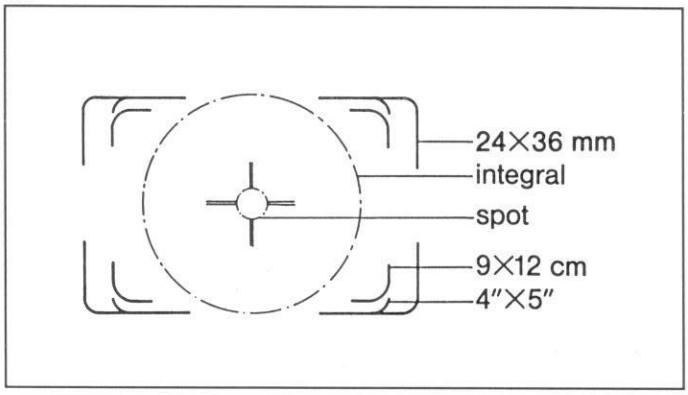

9.24 [Lamp 3200 K] . The lamp is set to color temperature 3200 K required for color photography. The conversion filter 3200 K → 5500 K is required in addition for daylight color film. A neutral density filter must be in the beam path to avoid dazzling. Pressing the key again cancels the 3200 K setting.

9.25 [START] releases exposure (and ends it in case of [T]).

9.26 Digit field. It is displayed when the keys [MAN] , [DATA] , [DATA COUNT] , [RECIPR] , [COUNT] are pressed for keying in. Press [ENTER] for input.

9.27 [ENTER] . For input after [MAN] , [DATA] , [DATA COUNT] , [RECIPR] , [COUNT] and [SERIES] + [EXPOSURE-ADJUSTMENT.] .

9.28 [FLASH] is provided for further upgrading.

9.29 [FLASH TEST] is provided for further upgrading.

*) When a 35 mm film cassette Axio Mot has been exchanged for another one on one and the same camera port, input the frame number of the mechanical counter with [COUNT] .

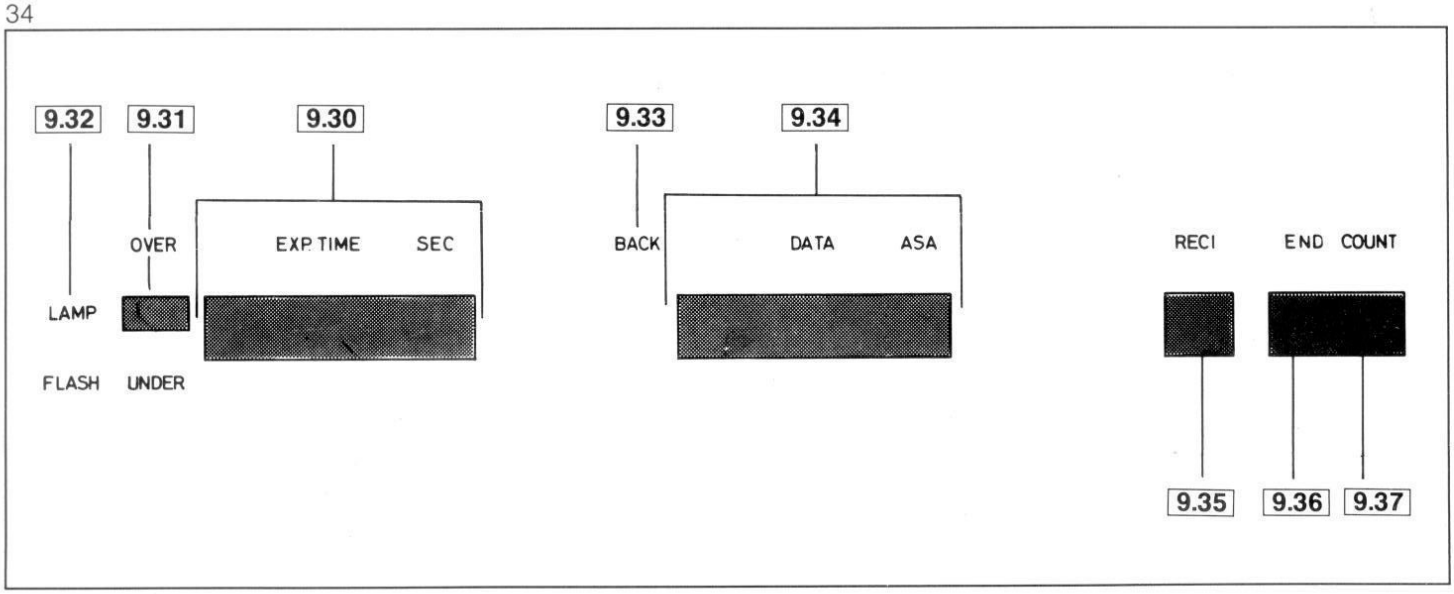

Display elements

9.30 Decimally displays either the exposure time measured by the automatic system with all adjustments, the manually input or the stored exposure time. The display runs towards 0 during exposure. During time exposure (T → 9.12) whole seconds are counted as from 0.

If the exposure time is within the range of the automatic system the green field of
9.31 will light. OVER indicates that the brightness is too high (provide neutral density filter), UNDER that it is too low or no light in the photographic beam path.

9.32 LAMP lights when Lamp 3200 K → 9.24 is pressed.

9.33 BACK is provided for the data back of the 35 mm cassette (in preparation).

Depending on which key is pressed

9.34 displays the operational number imprint of the large-format or the ASA value of the operational camera.

9.35 Reciprocity code number of each camera port input with → 9.18 .

9.36 END lights if the film must be exchanged.

9.37 Counts the frames consecutively, separately for each camera.

Flashing keys will remind you of something, to make or end an input, etc. If the camera selector key flashes it signifies that no cassette is attached or no film loaded.

It is applied mainly to increase the contrast of unstained specimens.

Required equipment
- Objectives (1) designated Ph. They may be used in brightfield as well.
- A condenser (5) with turret (2) with Ph positions.

Additional adjustment
The phase rings in the objectives are of different size, and marked Ph 1, Ph 2 and Ph 3 on the objective (1). The turret (2) bears the same designations Ph 1 etc. for combination with the suitable objective. (Ph 1 is for 10× objectives only; condenser 5.19 , page 12, therefore, has only the positions Ph 2 and Ph 3.)

Perfect phase contrast is achieved if dark ring in the objective and bright ring in the condenser exactly coincide, which is controlled with swung-in Bertrand lens (6) and focusing with the lever (7) to the right. (Without the Bertrand lens the control is made like that of the condenser diaphragm (page 5), without eyepiece).

If the two rings do not exactly coincide (centration), correct with the centering screws accessible through openings (4) (Fig. 36).

Special notes
More than in brightfield meticulously clean glass-to-air surfaces of the specimen (fingerprints?) are necessary in phase contrast. The diaphragm ring (3) of the condenser is without function because the Ph openings do not contain iris diaphragms.
The diaphragms in the Ph positions of the condenser belong to the front lens of a specific condenser; they must be exchanged if the front lens is exchanged (see table on page 34).

36

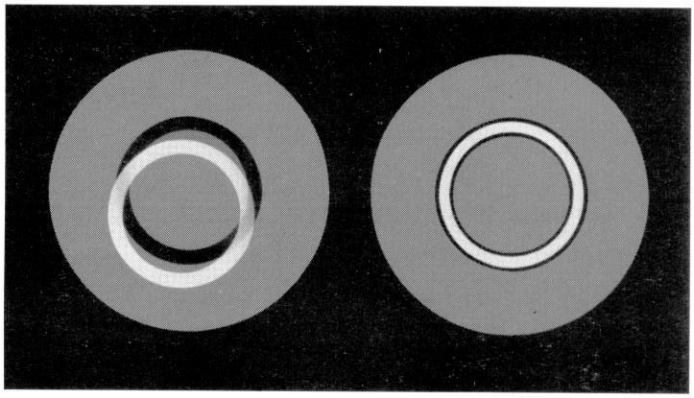

35

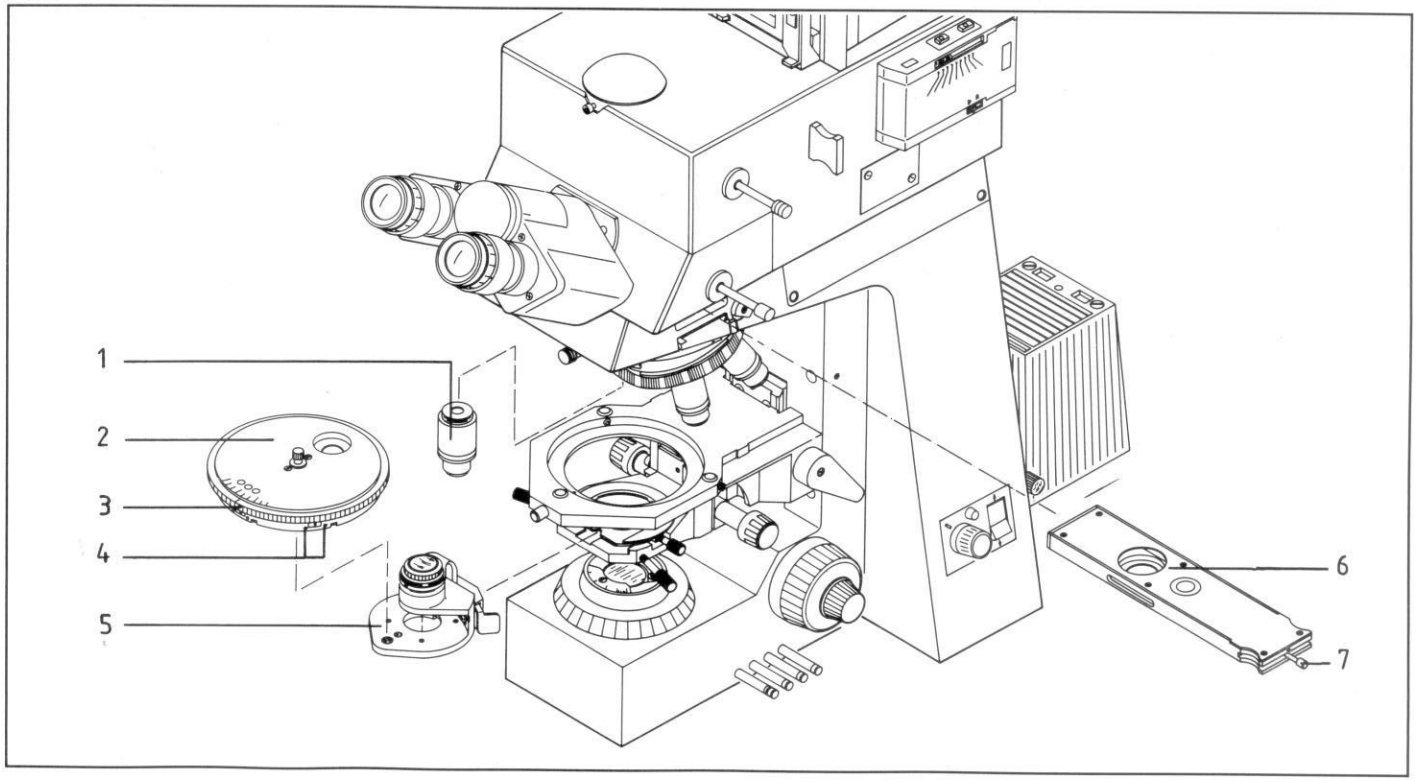

37

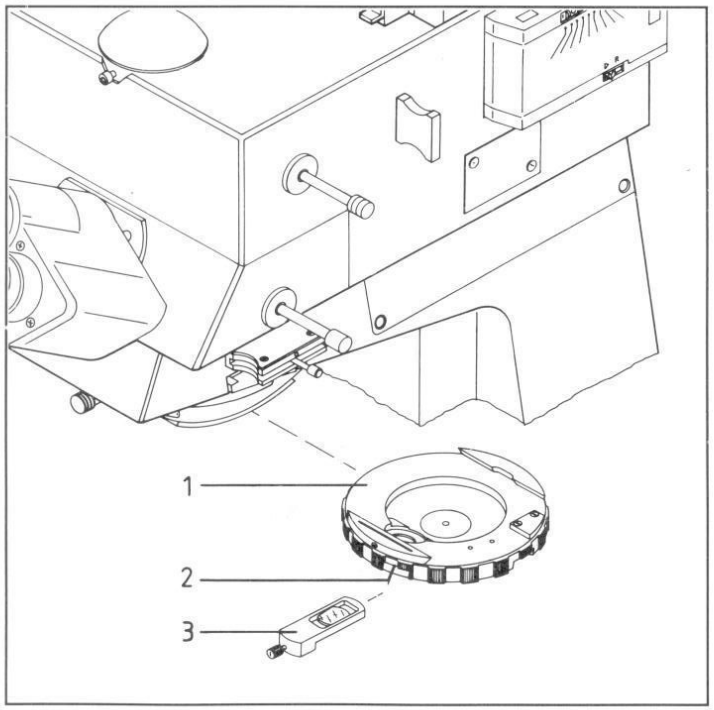

39

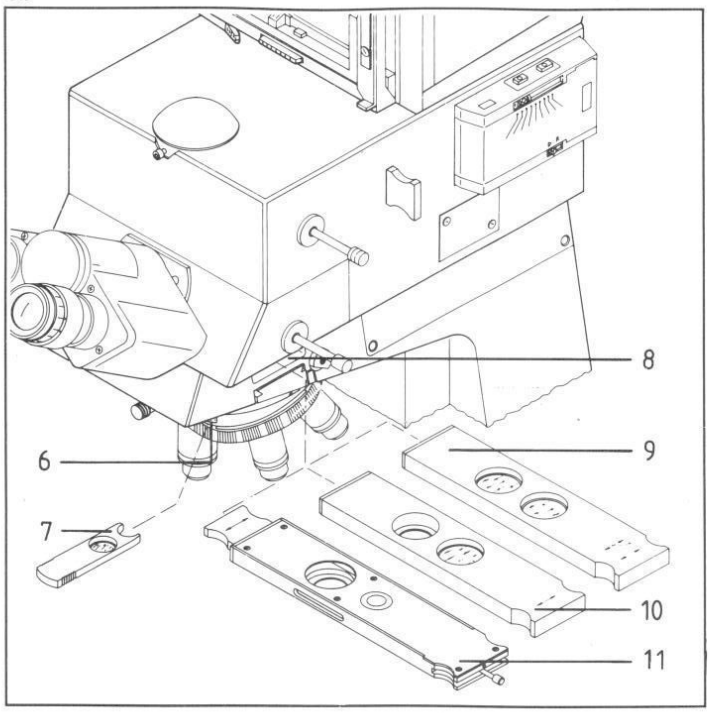

38

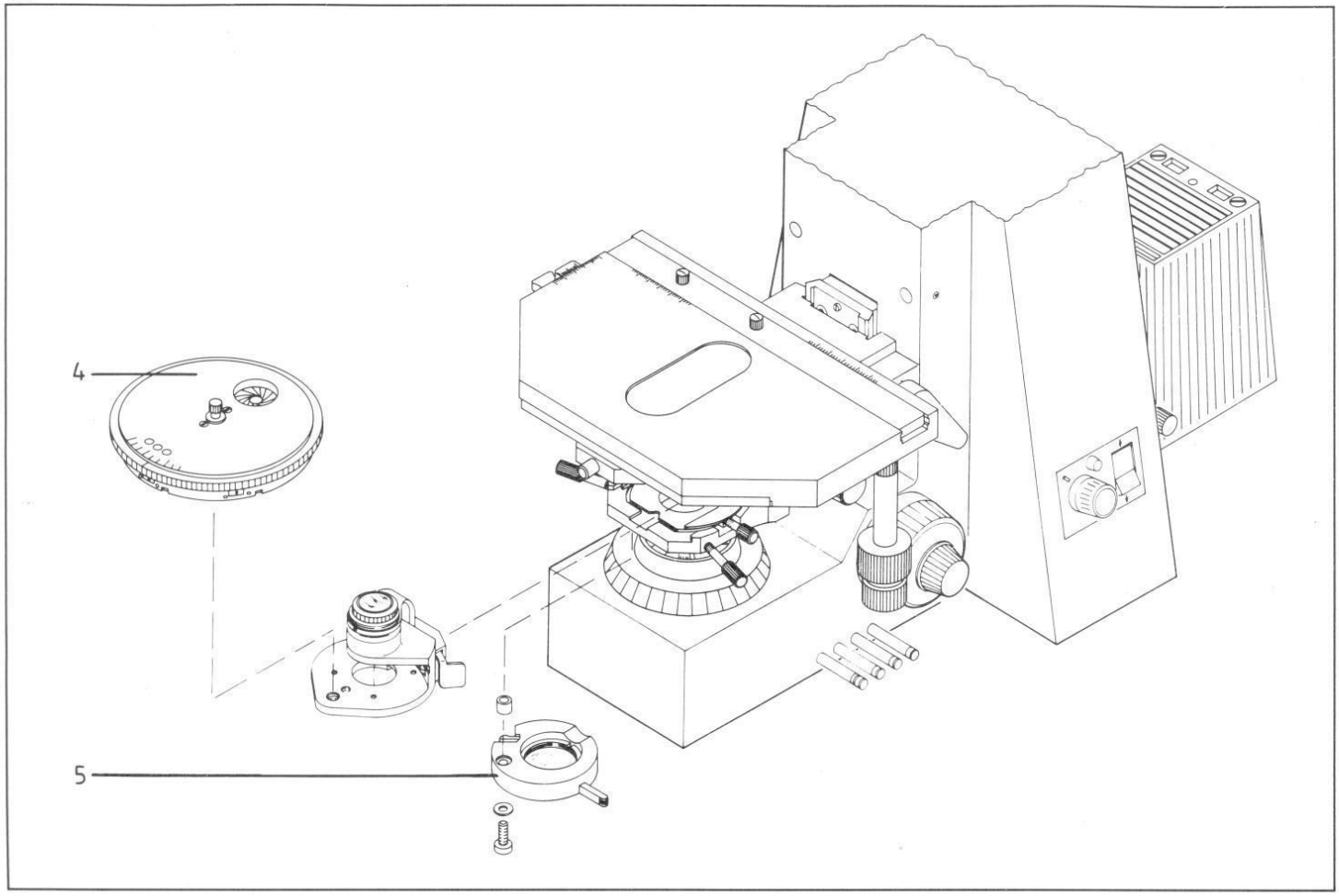

It is applied, for instance, if a specimen is too thick for phase-contrast examination so that specimen layers outside the focal plane impair the brilliance of the image, or if the halo which is typical of phase contrast is disturbing for the observation of small features.

Required equipment
- No special objectives
- A special nosepiece (1) with slots (2) for (3)
- DIC slide bearing on its top surface magnification and aperture of the objective for which it is intended
- A condenser turret (4) with DIC positions
- A polarizer (5) which is swung in beneath the condenser
- An analyzer (10) which is slid into (8).

Additional adjustments
Similar to the 3 (or 2) Ph positions of the condenser there are 2 DIC positions, one for objective apertures 0.3 . . . 0.4, the other for apertures 0.5 . . . 1.3.
Possible combinations
- objective 10/0.30 – condenser position .3/.4
- objective 20/0.5
- objective 40/0.75
- objective 100/1.30

} condenser position .5-1.3

The DIC positions are provided with iris diaphragms. Open them completely at first. To enhance the contrast they can be slightly closed, which is generally the last step of adjustment.

With the knurled screw of the DIC slides (3) in the nosepiece optimum contrast is adjusted.

Special notes
In DIC the contrast is generated by a (pseudo) relief. For linear structures it depends on their orientation: in "light-shadow" direction it will be extremely low, in a direction at right angles thereto the highest. Specimen rotation is therefore of advantage for adjustment, for which purpose a mechanical stage used as rotary stage is recommended (see page 9).

To ensure reflex-free illumination, luminous field and aperture diaphragms should not be opened wider than for Köhler illumination (see page 5).

As DIC uses polarized light, "optically active" elements between polarizer and analyzer will interfere, e.g. mica plates which are sometimes used for histological sections, or plexiglass culture chambers with a bottom of synthetic material (chambers with glass bottom are available).

Analyzer with lambda plate (9) (453656) or auxiliary object lambda (7) (473704) in slot (6) instead of normal analyzer (10) (453655) will generate color DIC.

For combined DIC/phase contrast work exchange the normal Bertrand lens slide for the one with analyzer (11).

The prisms in the condenser DIC positions belong to the front lens of a specific condenser; they must be exchanged when the front lens is exchanged (see table on page 34).

Required equipment

- No special objectives; Plan-Neofluar objectives for UV excitation
- Special reflected-light illumination (see page 17).

Procedure

- Adjust the selected specimen feature in transmitted-light brightfield or phase contrast with reflector slide (4) in middle position (free light path), and lower illuminator with halogen lamp. Switch on the mercury lamp but block its light path with slide (1).
- Switch off transilluminator (or reduce its brightness considerably), remove all filters in magazine from the beam path, select the left or right position of the reflector slide depending on the type of excitation, and free the light path with (1).
- Because a condenser aperture diaphragm would not affect the contrast, etc. in fluorescence, only a luminous field diaphragm is provided. With lever (2) close it so far that it becomes visible in the image, center with (3), and open it until the field of view is free.

Special notes

Start fluorescence adjustment with a 20× objective and a strongly fluorescent specimen. Corresponding specimens are available, but you may also prepare them yourself; a diffusion specimen with anthracene crystals is quite popular. To check the illumination you may even use the specimen label.

The reflector slide contains several filter sets for different tasks. Each set comprises 25 mm dia. exciter and barrier filters enclosing a chromatic beam splitter of 26×26 mm. For more information see page 36.

If you want to know more about fluorescence microscopy please refer to our brochure K 41-005 "Worthwhile facts about fluorescence microscopy".

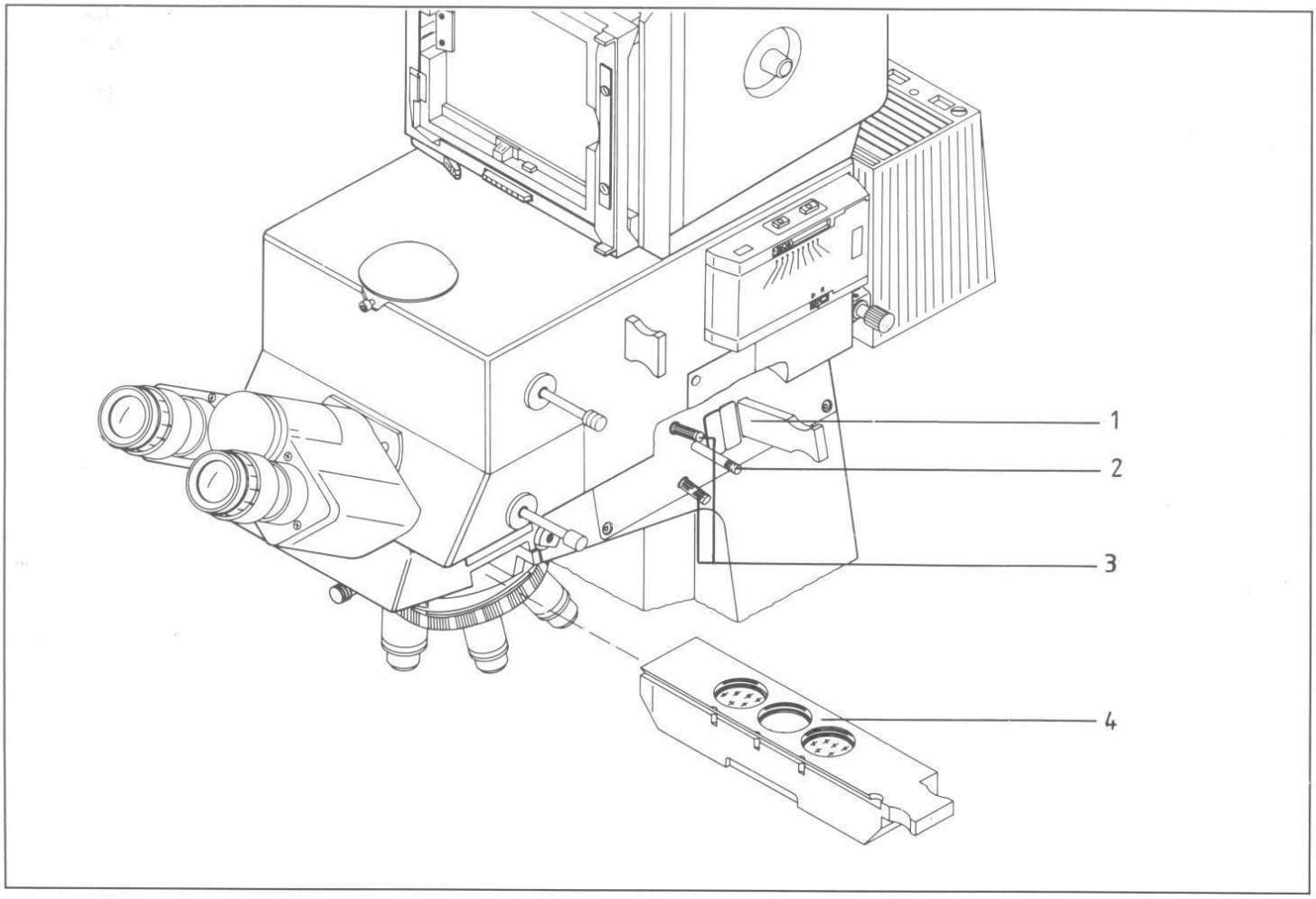

It is applied
- to examine exceptionally small objects or object features such as treponemas, spirochaetae, flagellated bacteria, etc., or emulsions, if the contrast supplied by phase contrast is insufficient
- if the specific colors of natural (unstained) objects are well visible (living organisms in water like algae, unicellular organisms, lower animals).

Required equipment
- Special objectives (with integral iris diaphragm) only for higher magnifications, but
- a condenser with central stop whose NA is higher than that of the objective used.
  Further details are given below.

Necessary adjustments
- Illumination adjustment like in brightfield. The luminous field diaphragm must be imaged and centered. If the vertical adjustment of the condenser is incorrect there will be an annular luminous field instead of an unsharp diaphragm image. With a dry darkfield condenser
  1. center the luminous field diaphragm without darkfield insert (brightfield),
  2. put in darkfield insert and correct with 5.22 .
- Check the objective pupil for complete extinction. With the ultra condenser there may be a light ring in the pupil which is eliminated with the iris diaphragm of the objective. The background of the eyepiece image must be absolutely dark; this is also influenced by the position of the luminous field diaphragm, especially at the edge of the field of view.

Special notes
Darkfield requires cleaner specimens than other methods; especially grease films (fingerprints) will lighten the background.
The critical adjustment of the ultra condenser is facilitated by pre-centering with a low-power objective. Use a specimen with uniform feature distribution, e.g. a blood smear for initial adjustment; the luminous field becomes visible only where particles light up, but the darkfield specimen ultimately examined may be "empty" over wide areas.

Darkfield illumination with various objectives

Objective		Illumination using
Plan-Neofluar	Plan-Apochromat	
10/0.30	10/0.32	Ph stop 3
16/0.50		0.44-0.56
20/0.50	20/0.60	
25/0.80		darkfield stop
40/0.75 w/iris	40/1.0 w/iris	0.75-0.9
40/0.75	40/0.95	
	40/1.0	
	63/1.4 w/iris	ultra condenser
80/0.95		1.2-1.4 (oil)
100/1.3 w/iris	100/1.4 w/iris	

41

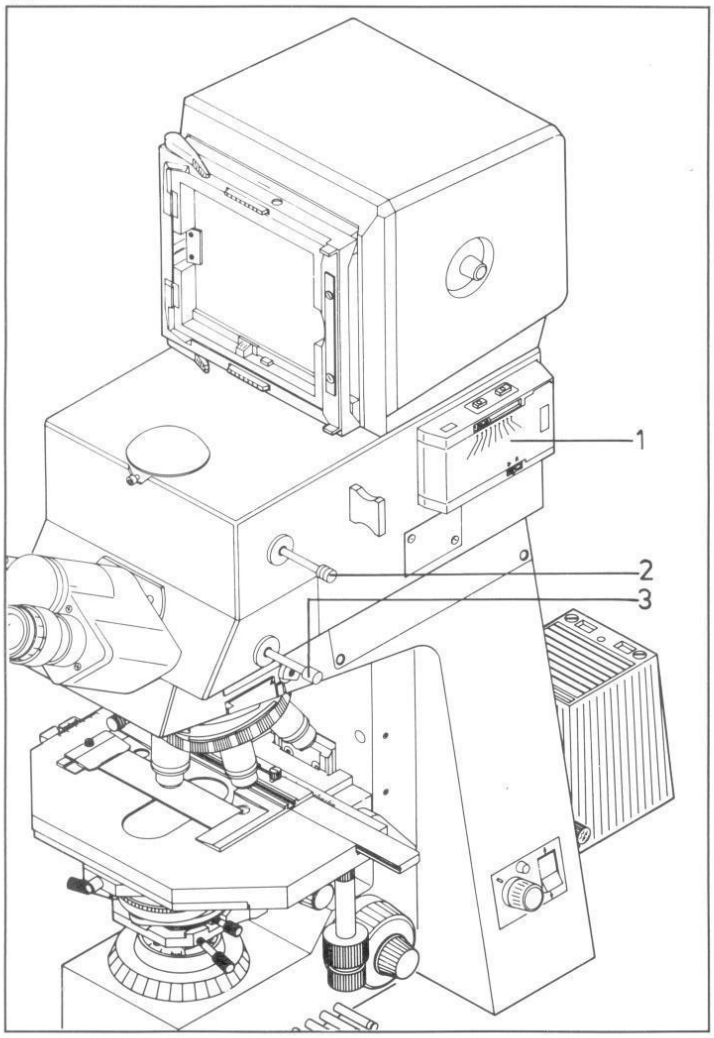

35 mm B/W

The Axiophot is adjusted for observation (see page 5). Beam splitters (2) and (3) are set to observation and photography. Cassette (1) is loaded with film (film types see on page 32) and mounted, and the film speed set on the cassette.

On the control panel you have

- input the camera port: [35L] or [35R] .
- input the RECI value of the chosen film type (see page 32): [RECIPR] ; e.g. [1] ; [ENTER] .
- set the frame counter to 0: [COUNT] ; [ENTER] . (Omitted with newly loaded film)
- switched on the luminous frame: [FRAME] , both, outlines and object are in focus; for low magnifications use a telescope attachment to make this adjustment.

Displays on the control panel

- The green signal lamp lights; if OVER lights instead: reduce brightness; if UNDER lights: is light path free?
- Exposure time (EXP.TIME) (integral for automatic exposure measurement and exposure adjustment 0)
- RECI value
- ASA value

Exposure: Press [START] . The luminous frame disappears, automatic exposure is made, the luminous frame is visible again, film advance, mechanical (cassette) and electrical counter (control panel) continue counting.

42

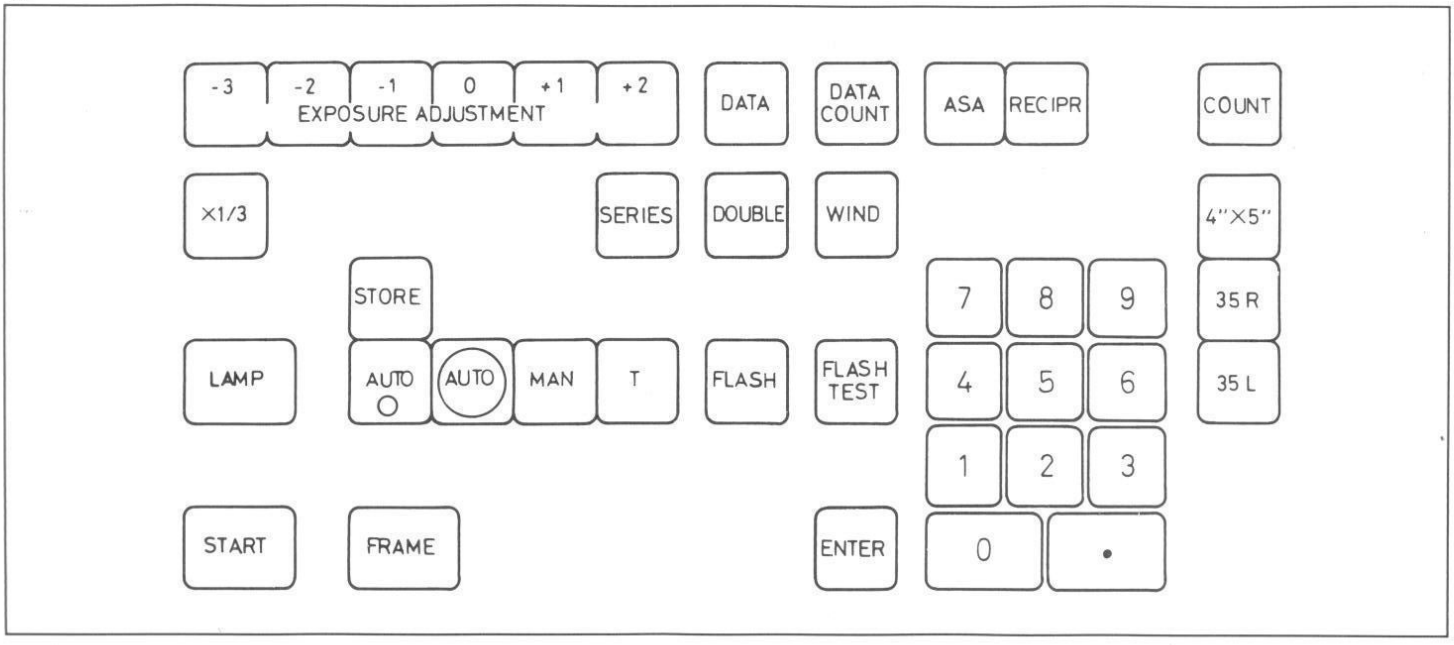

35 mm color

In addition to the above, remember for color photography: Color reversal films (slide films) are available for daylight (5500 K) and artificial light (3200 K). The color temperature values must be accurate to within ca. 100 K for correct color rendition. If the 12V 100W halogen filament lamp is set to color temperature 3200 K, its brightness is so high that undervoltages will be used for observation. With key Lamp 3200 K on the control panel the voltage is changed before each color exposure. One or several neutral density filters must be in the beam path to attenuate the light; they have no influence on the color temperature.

Reversal films for artificial light (3200 K) are generally recommended for photomicrography. If daylight film is used, swing in the conversion filter which increases the color temperature from 3200 K to 5500 K (flashlight has daylight color temperature).

Large-format photomicrography

similar to 35 mm B/W, but
- camera selector: 4"×5"
- DIN/ASA setting on dial
- RECI setting like 35 mm B/W
- load cassette, pull out cassette slide and push it in after exposure.

Color film: think of the color temperature (see 35 mm color).

In fluorescence

it applies, contrary to general photomicrography, that:
- Fluorescence light is neither daylight nor artificial light, but generated in the specimen itself. Daylight film generally supplies the best results in color photography, but there are exceptions to this rule.
- The low brightness requires long exposure times which, in turn, requires high-speed films. The coarser grain of such films is hardly disturbing, because it occurs especially with mean luminance which hardly exists in fluorescence images; there is either dark background or bright details. Consequently, no objections to the use of films of 400 ASA and more.
- The dark or even black background will often – even with spot measurement – be part of the measuring field of the automatic exposure control, which will cause overexposure. Use EXPOSURE ADJUSTMENT in such cases. The ratio of bright-to-dark areas is easily estimated in the spot measuring field 9.23 :

43

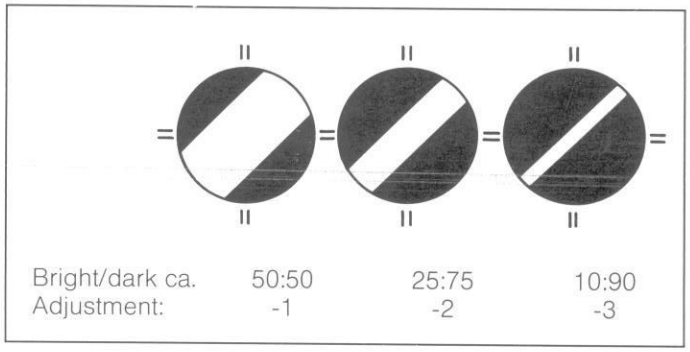

(If a typical measuring field of a specimen is to be removed from the image center for photography, the exposure time can be stored with STORE .)

- Because of the high contrast the "exposure range" is quite extensive, since brilliant structures clearly stand out on dark background even if the exposure times are different. If the exact rendition of the fluorescence colors is important, it is recommended to take a series of exposures with different exposure times.
- Fluorescence colors tend to fade, especially if the exciting radiation is intensive and of high energy. The specimen can be protected by reducing, at least temporarily, the intensity of the illumination used for observation by neutral density filters. (The darker the room the better you will see at low brightness, a fact which is often forgotten.) Think also of the light-tight slider if you interrupt your work. Carry out the preparatory work on specimen features in the field of view which will later not be used for photography and so save the others from damage by excessive radiation.

An exactly adjusted luminous field diaphragm is important also insofar as it prevents energy from reaching specimen features outside the field of view or photographic field.

Compensation of reciprocity failure

Use the advantage of this compensation for exposure times which are longer than 1 s. (For an explanation see [9.18] on page 23.) The code numbers for the most frequently used film types, which you must input with [RECIPR] on the control panel are listed below.

You can find this value yourself for film types which are not listed:
With automatic exposure control make a series of test exposures with an exposure time shorter than 1 s, reduce the brightness with neutral density filters or similar means until you arrive at several seconds exposure time. Take a number of exposures with the RECI settings 1 to 9. After development you can find out the longtime exposure which best complies with the first one. Its RECI value will be the code number for this specific film type. It will be set whenever you use this film type and independent of the exposure time.

44

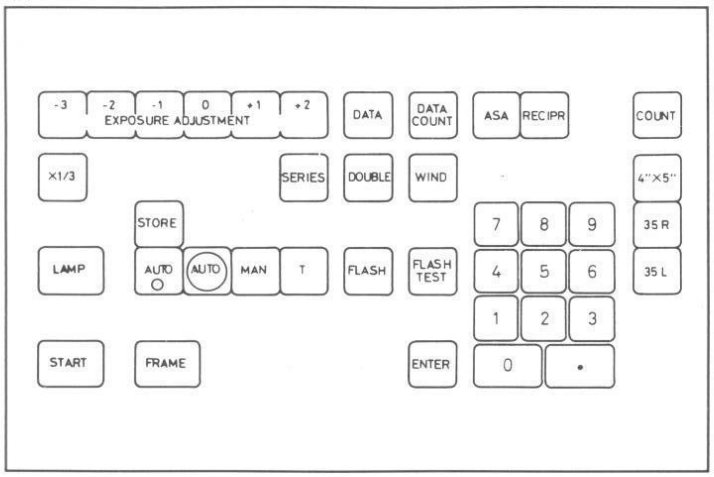

No test exposures are necessary if the film manufacturer indicates the extension of the exposure time, e.g. "+2 values for 10 s". +2 values signify a 4 × longer exposure time, i.e. 40 s. Adjust your microscope so that the automatic system indicates 10 s with RECI set to 0 (here, you may for once use the aperture diaphragm to reduce the brightness). When changing the RECI values you will quickly find the one which best approximates 40 s. This would then be the code number for your film, 8 in the above example.

The film manufacturers often recommend correction by filtering which should be observed for color films.

Compensation of reciprocity failure for some frequently used film types

Film type	Code number
AGFACHROME RS 50, 100, 200	5
AGFACHROME RS 1000	4
EKTACHROME 50	4
EKTACHROME 64, 400	6
EKTACHROME 160	5
EKTACHROME sheet film 6118	1
POLACHROME CS	5
POLAROID 58, 668	7
AGFAPAN 25	6
AGFAPAN 100, 200, 400	8
AGFA ORTHO 25	1
ILFORD PAN F	4
ILFORD HP5	6
KODAK PLUS-X, TRI-X	9
KODAK Technical Pan 2415	3
POLAROID 51	3
POLAROID 52, 552, 55	1

45

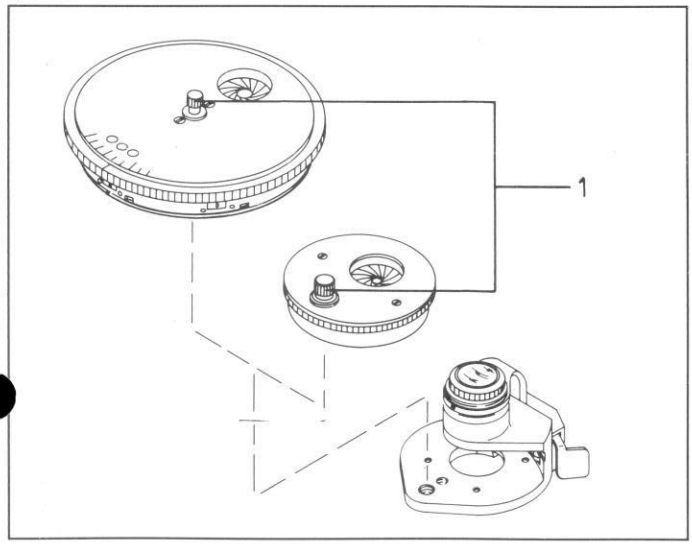

Should minor exchanges be necessary on your microscope and no service technician available, the following hints may be helpful.

Condenser exchange

Not the entire condenser must be exchanged but only inserts to convert a brightfield condenser into a phase-contrast, DIC- or darkfield condenser. Loosen screws (1) and lift the insert out. The normal condenser must be completely exchanged for an ultra condenser or the condenser system 1.4. Lower the condenser as far as possible with (2), loosen screw (3), and pull out the condenser forward. The exact insertion of the other condenser is ensured by notch (4).

46

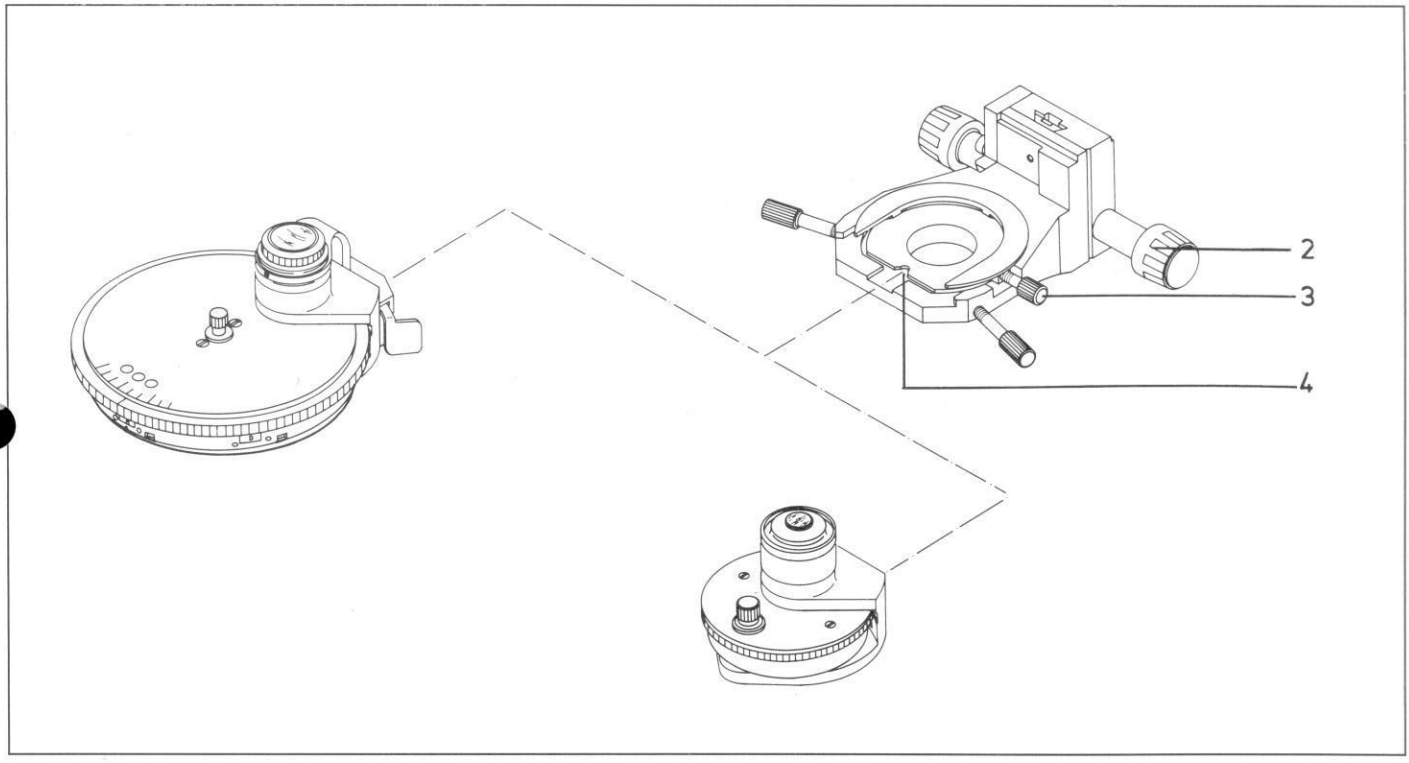

Exchanging phase stops and/or DIC prisms in condenser turrets

Fit phase stops only in centrable openings, DIC prisms only in openings with iris diaphragm as shown in Fig. 47.
The equipment of the condenser turret is listed in the table below.

47

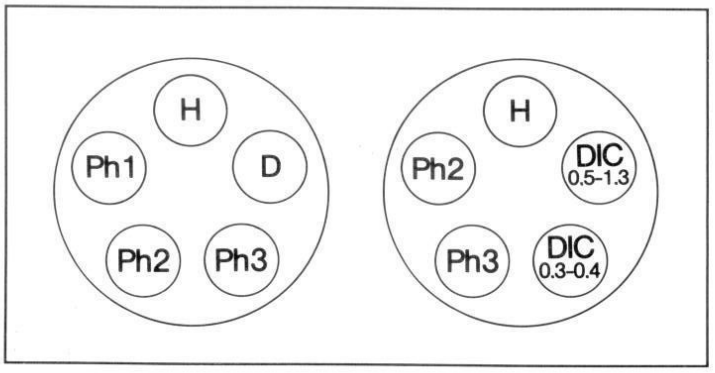

Equipment of condenser turret

Insert Turret	Mounts for diaphragms, etc.	with front lens	possible equipment
Brightfield insert (445364)	1 plug mount with iris	0.6 (445355)	brightfield, DIC 0.3-0.4/0.6 (445383) DIC 0.5-1.3/0.6 (445384)
		0.9 (445356)	brightfield, DIC 0.3-0.4/0.9 (445373) DIC 0.5-1.3/0.9 (445374)
		1.4 (445357)	brightfield, DIC 0.5-1.3/1.4 (445389)
Darkfield insert (445363)	1 centrable mount	0.9	D 0.75-0.9 (445399)
Turret HD Ph (445366)	1 plug mount with iris 4 centrable mounts	0.6	brightfield, DIC 0.3-0.4/0.6 (445383) DIC 0.5-1.3/0.6 (445384)
			Ph 1/0.6 (445379) Ph 2/0.6 (445380) Ph 3/0.6 (445381)
		0.9	brightfield, DIC 0.3-0.4/0.9 (445373) DIC 0.5-1.3/0.9 (445374)
			Ph 1/0.9 (445369), Ph 2/0.9 (445370), Ph 3/0.9 (445371), D 0.75-0.9 (445399)
		1.4	brightfield, DIC 0.5-1.3/1.4 (445389)
Turret HD Ph DIC (445365)	3 plug mounts with iris 2 centrable mounts	0.6	like turret HD Ph
		0.9	
		1.4	

48

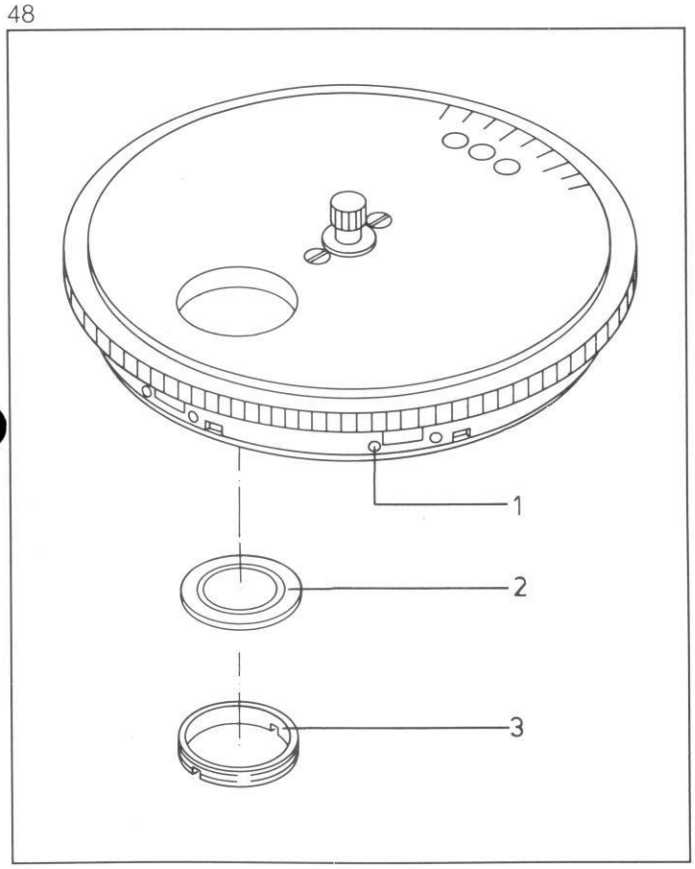

Phase stops are exchanged by unscrewing retaining rings (3) from beneath the turret and inserting the stops with their polished glass surfaces facing down (2). A stop mount which is not tightly fitted would fall out when working; before exchanging the stops we therefore recommend to temporarily turn in screws (1) as far as they will go to secure the mount.

49

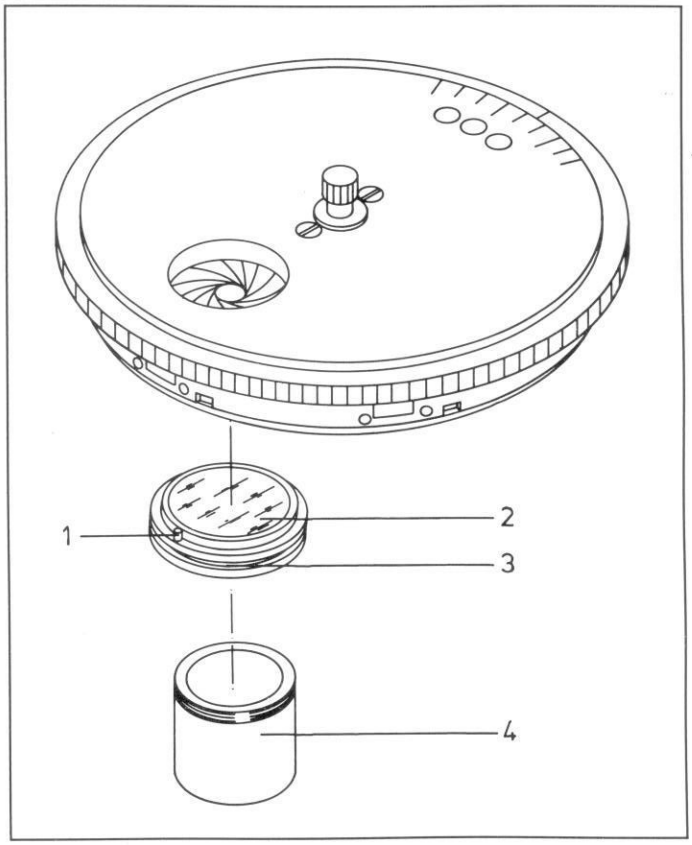

DIC prisms are exchanged by screwing wrench (4) into the prism mount (2), forming a handle to lift the prism out. (A wire ring in the holder engages a notch (3) of the prism mount.)
For insertion pin (1) must be in the right borehole of the holder. Check for completely flat seating; otherwise mechanical and optical interferences are likely to occur.

After exchange also exchange the labels which must be on the turret opposite the opening.

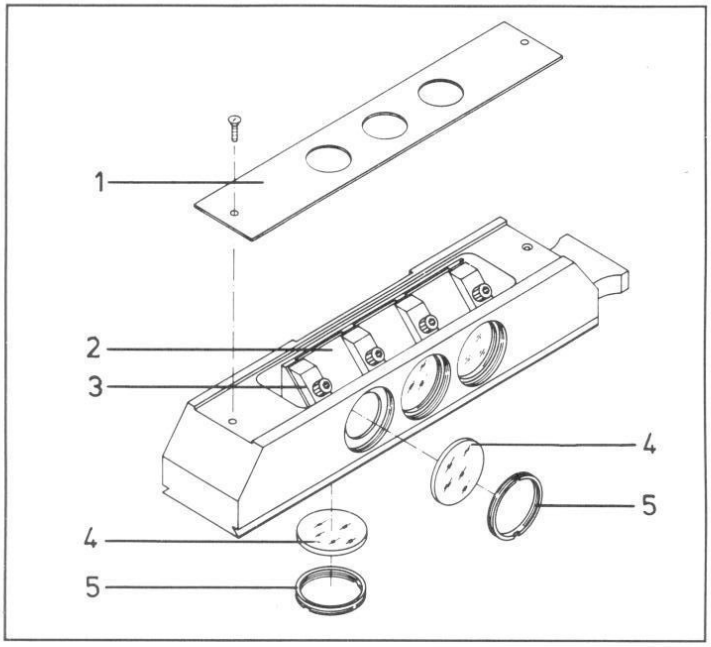

Fluorescence reflector

Exchange of filter (4) and chromatic beam splitter (2). The built-in filter sets can be exchanged when the retaining rings (5) have been unscrewed. Remove plate (1); the plate with chromatic beam splitters (2) is accessible. It is mounted on a spring mask and must not be touched. It is generally not necessary to take out straps (3); loosen them so that the chromatic beam splitter can be exchanged on the mask.

Filter sets

Excitation	Filter set	Exciter filter	Chromatic beam splitter	Barrier filter
UV-G 365	487902	G 365 (447704)	FT 395 (446431)	LP 420 (447731)
Blue-violet G 436	487907	G 436 (447706)	FT 510 (446434)	LP 520 (447737)
UV-H 365	487901	BP 365/12 (447710)	FT 395 (446431)	LP 397 (447330)
Blue-violet H 436	487906	BP 436/10 (441712)	FT 460 (446433)	LP 470 (447753)
Blue H 485	487916	BP 485/20 (447713)	FT 510 (446434)	LP 520 (447737)
Blue H 485 IFB	487919	BP 485/20 (447713)	FT 510 (446434)	LP 515 (447755)
Blue H 485 SB	487917	BP 485/20 (447713)	FT 510 (446434)	BP 515-565 (447723)
Green H 546	487915	BP 546/12 (447714)	FT 580 (446435)	LP 590 (447738)
UV-violet 390-420	487918	BP 390-420 (447720)	FT 425 (446432)	LP 540 (447752)
Blue-violet 395-440	487905	BP 395-440 (447721)	FT 460 (446433)	LP 470 (447753)
Blue 450-490	487909	BP 450-490 (447722)	FT 510 (446434)	LP 520 (447737)
Blue 450-490 IFB	487911	BP 450-490 (447722)	FT 510 (446434)	LP 515 (447755)
Blue 450-490 SB	487910	BP 450-490 (447722)	FT 510 (446434)	BP 515-565 (447723)
Green 510-560	487914	a) LP 510 (447736) b) KP 560 (447765)	FT 580 (446435)	LP 590 (447738)

51

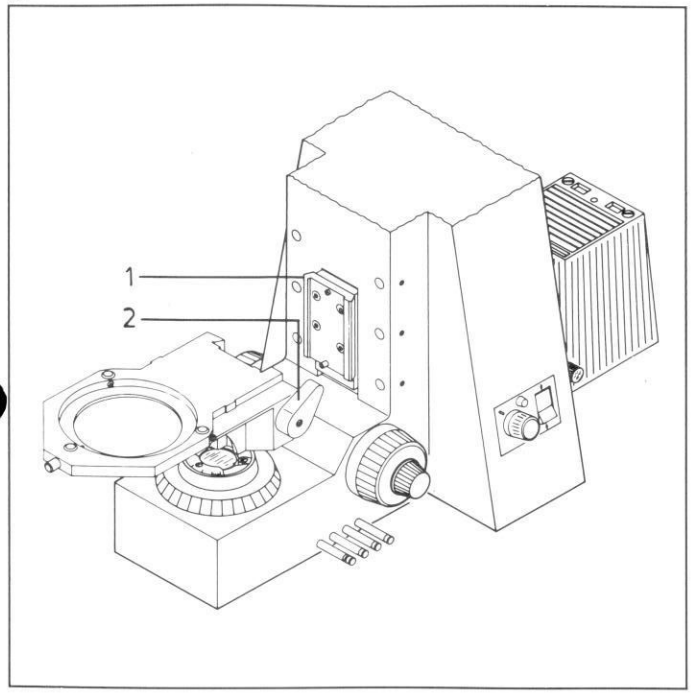

52

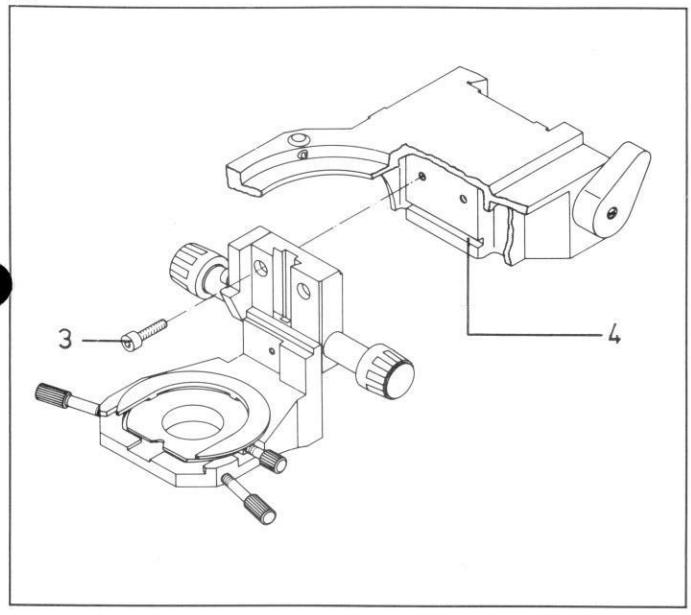

53

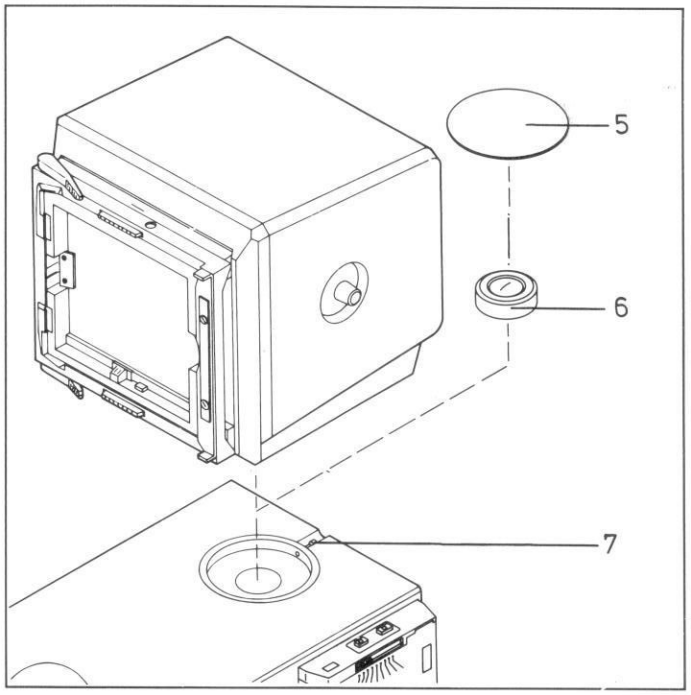

Stage components

Detachment from mounting plate: flick lever (2) (right) up, and turn off the entire unit about the left edge (1) of the plate. Attachment: put on left edge, then – lever up – press down right side; the spring pin is pressed down. Lever flicked down fixes the pin.
The condenser carrier can be removed after loosening 2 screws (3) on the front. When remounting the carrier the two orientation pins must engage notch (4); then tighten screws.

Large-format camera attachment

To mount it on Axiophot, unscrew screw (7) and take off back cover (5); screw the supplied optics (6) into the free opening. Put on the camera attachment vertically from above and secure with screw (7).

The spares are listed below as they appear in the instrument description starting on page 6.

1.2 Fuses
1. 220 V +/- : 3.15 A SB; 127.026
2. 110 V +/- : 6.3 A SB; 127.029.
Both contain for the secondary circuit: 10 A SB; 128.167.

1.5 42 mm dia. heat-reflecting filter, 467828;
insert it so that the reflecting surface (marked L at the edge) faces the light source.
44 mm dia. diffusion disk, 451851-0003. (The retaining rings are loosened with small screwdriver; insertion accordingly.)

2.0 12V 100W halogen filament lamp, 380059-1660
(avoid fingerprints on the bulb!)
HBO 50 mercury lamp, 381619
(cp. description in G 41-310/III).

7.2 18 mm dia. red-attenuating filter BG 38, 467991-9902.
Built-in heat-reflecting filter KG 1, 18 mm dia., 467990.

8.5 6V 5W spare filament lamp, 380029-7200.

9.1 Spare fuses
1. 110/120 V: 0.63 A SB; 127.018.
2. 220/240 V: 0.315 A SB; 127.015.

G 42-250-e

Printed in West Germany

TS I/86 To