Stereomicroscopy

Stemi DV4 SPOT
Stereomicroscopes in the Dental Lab

The combination of the powerful Stemi DV4 SPOT Stereomicroscope with the flexible Model U stand is likely to become an indispensable tool for dental technicians. The microscope considerably improves the comfort and precision of your manipulations, allowing you to shape dentures more accurately and in a shorter time. A modest investment that will pay off soon.

"The microscope makes it easy to detect and remove casting beads from the metal framework."

Sibylle Einert, *dental technician*





A fiber-optic cold-light illuminator integrated into the Stemi DV4 SPOT Stereomicroscope always illuminates the complete object field of view.

The variable auxiliary lens system is not only used for focusing but also allows individual adjustment of the instrument's viewing height.

The great flexibility of the Model U stand provides ample freedom for positioning the stereomicroscope.

Greater Speed. Greater Precision.
Greater Efficiency.

ZEISS

Stereomicroscope Stemi DV4 SPOT

Eyepiece	W 10x/20 Br. foc.							
Supplementary lens	0,3x	0,4x	0,3x...0,5x	0,63x	ohne	1,25x	1,6x	2x
Free working distance	285 mm	210 mm	234...91 mm	130 mm	92 mm	60 mm	48 mm	31 mm
Magnifications	2,4x...9,6x	3,2x...12,8x	2,4x...16,0x	5,0x...20,2x	8,0x...32,0x	10,0x...40,0	12,8x...51,2	16,0x...64,0
Object field (mm)	83,3...20,8	62,5..15,6	83,3...12,5	40,0...9,9	25,0...6,3	20,0...5,0	15,6...3,9	12,5...3,1

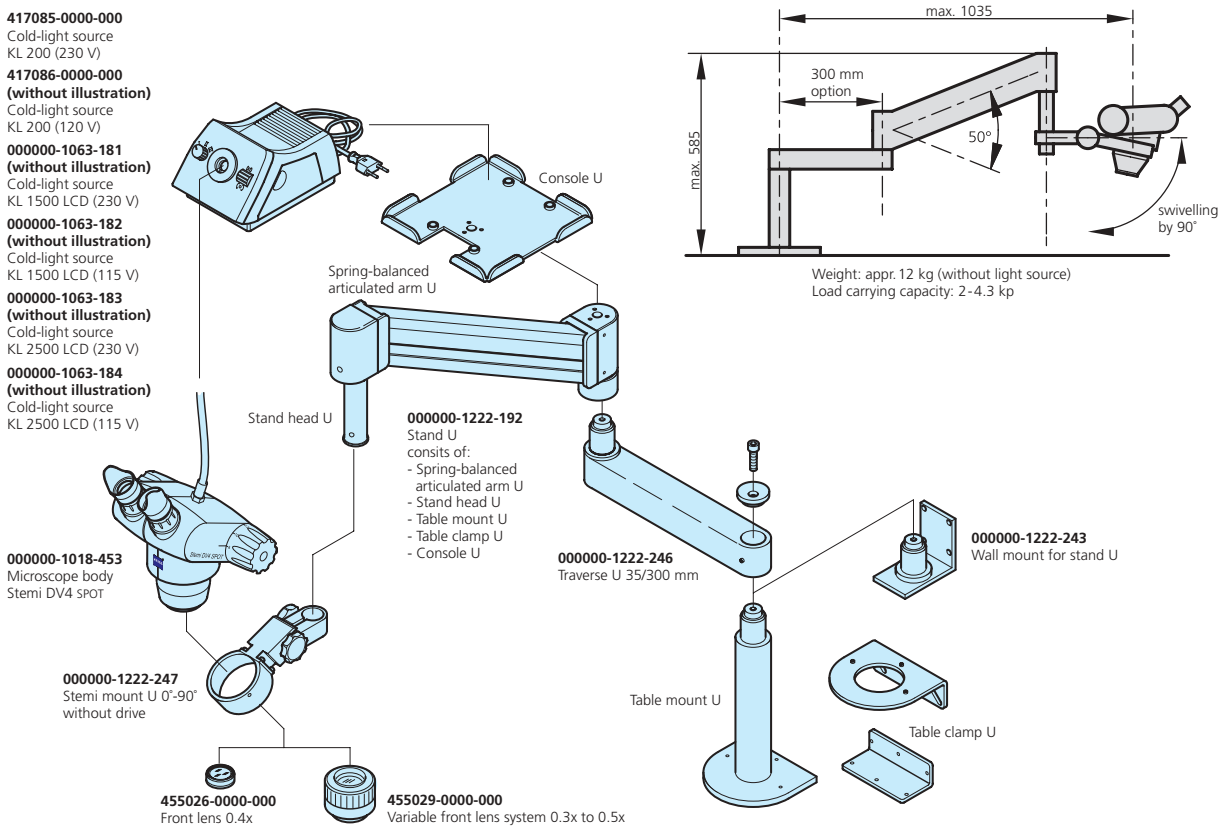

We gratefully acknowledge friendly support given by:
Frank Diedrich, front tooth esthetics specialist, Haan
Dental-Labor Freund, Gera
Walsdorf Zahntechnik GmbH, Sindelfingen
Ralph Matzerath, photojournalist, Haan

For further details, please contact:

Carl Zeiss
Light Microscopy

P.O.B. 4041
37030 Göttingen
GERMANY

Phone: ++495515060660
Telefax: ++495515060464
E-Mail: micro@zeiss.de

www.zeiss.de/micro

Printed on environment-friendly paper, bleached without the use of chlorine.

Design and specifications are subject to change in the interest of technical development.

46-0005 e/09.03



Its Performance Features ...





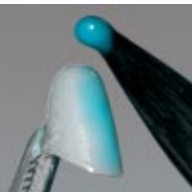



Magnifying and illuminating power

- Patented, efficient zoom system with zoom factor 4 between overview and detail observation
- Focusing high-eyepoint eyepieces for spectacle wearers, with fold-back eyecups
- Fiber-optic SPOT illuminator integrated into the microscope body



Elegant optical focusing with the variable 0.3x ... 0.5x auxiliary lens system

- Optical focusing on the object
- Variation of the working distance between 91 mm and 234 mm
- 2.4x – 16x magnification range



Unrestricted flexibility of the Model U stand

- Modular stand system – stable, space-saving, with a matchless number of degrees of freedom
- The important joints can be clamped or restrained
- Mounting to desks, shelves or walls



Clever integration of a cold-light source

- A high-quality cold-light source is integrated into the microscope stand
- Choose between 20 W, 150 W and 250 W sources

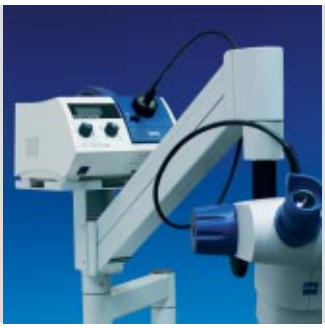

... are Your Benefits

- See brilliant, highly resolved images with real-life depth
- Perfect 3D observation allows you to stay focused on your work for hours without fatigue
- Enjoy shadowless illumination of the object field at all magnifications

- Focus on object details quickly, conveniently and without wobble
- Adjust the microscope's viewing height for best comfort

- Individually position the microscope to suit your workplace ergonomics
- Quickly swivel the microscope in and out of the way
- Efficiently share its use with colleagues

- Rotate the microscope unimpeded by extra peripherals – the light source always moves together with the stand
- Save space – the compact system has a small footprint
- Despite its wide swivel range, the microscope needs little desk space

"Admittedly I was surprised to see how quickly this instrument was accepted and used by the staff."

Sabine Freund
Senior dental technician



"Full ceramic crowns, in particular, can be shaped more precisely and checked more reliably with the microscope."

Klaus Baier
Senior dental technician



"I don't have to sit stoopingly any more. The microscope allows me to sit upright and relaxed and do my work with greater concentration."

Christian Keil
Dental technician



"With the microscope I work faster and with greater confidence. Exposing preparation margins is not a problem any more."

Martina Jung
Dental technician

