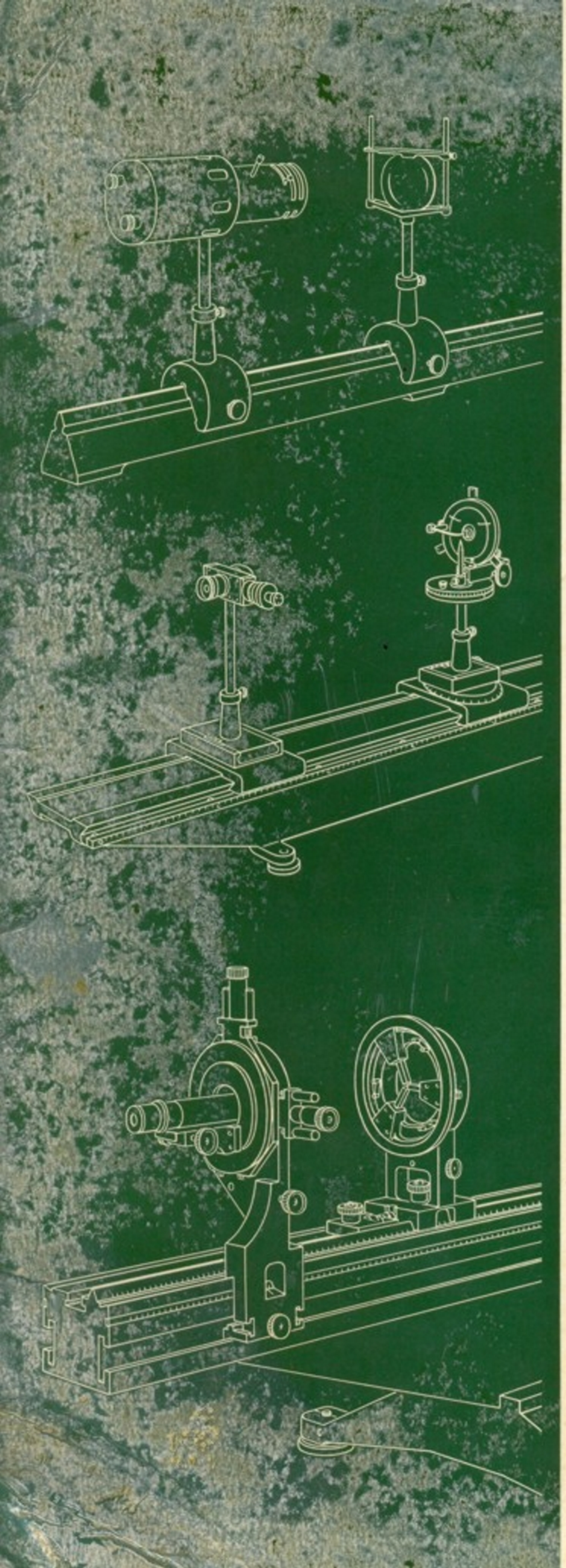

OPTICAL BENCHES

Ealing

2nd Edition, July 1963

Introduction

This, we believe, is the most comprehensive range of Optical Benches and Accessories offered.

There are five basic benches for different applications with varying accuracies, each with its appropriate carriers. There are sixty different accessories.

This range meets every requirement from simple alignment to the precise investigation of any optical system.

A unique feature of this range of Optical Benches is its flexibility.

The first three Benches all take accessories mounted on 13·7 mm stems and therefore all 40 accessories listed on pages 13 to 17 can be used interchangeably on these three benches.

The last three benches take the research accessories listed on pages 24 to 27.

The middle bench, that is the Precision Lathe Bed Optical Bench listed on pages 9 and 10, has the special advantage of taking *both* the standard accessories listed on pages 13 to 17 *and* the research accessories listed on pages 24 to 27.

All prices are ex works London. They are current at time of printing but subject to change without notice.

Responsible Service to Science

HUGH WOOD and Son Limited

23 Leman Street, London E.1, England

Telephone: ROYal 0392 *Cable Address: Hughson, London E.1*

Contents

EALING TRIANGULAR OPTICAL BENCH — *PAGE*

Zeiss triangular profile. The laboratory work horse of optical benches – a standard for 50 years – seven benches, ten carriers and forty accessories.

BENCHES .. 2–4
CARRIERS .. 5
ACCESSORIES .. 13–17

LATHE BED OPTICAL BENCH

To medium accuracy – for applications where greater weight and stability are required.

BENCH .. 6, 7
CARRIERS .. 8
ACCESSORIES .. 13–17

PRECISION LATHE BED OPTICAL BENCH

Guaranteed flat and straight to 0·0025 inch over its two metre length – the ultimate in flexibility; takes both the standard and research accessories.

BENCH .. 9, 10
CARRIERS .. 11, 12
ACCESSORIES, STANDARD .. 13–17
ACCESSORIES, RESEARCH .. 13, 24–27

RESEARCH OPTICAL BENCH

A massive bench with a guaranteed accuracy of 0·001 inch over its 8-foot length.

BENCH .. 18–20
CARRIERS AND ACCESSORIES .. 23–27

BECK PRECISION RESEARCH OPTICAL BENCH

Permits the set up and precise investigation of any optical system – has a top and two side slides – each is guaranteed accurate to 0·0005 inch over its entire length.

BENCH .. 21, 22
CARRIERS AND ACCESSORIES .. 23–27

OPTICAL BENCH ACCESSORIES

LENSES, BICONCAVE AND BICONVEX

Optically worked, ground edges, unmounted .. 28

MIRRORS, CONCAVE AND CONVEX

Spherically worked, surface aluminized and unmounted .. 29

MIRRORS, SCHLIEREN .. 30

FILTERS .. 30

GRATICULES .. 30

SPECTRAL SOURCES

Osram and Philips lamps, mounts and ballasts .. 31, 32

EALING TRIANGULAR OPTICAL BENCH

Flexible

Reliable

Interchangeable

Inexpensive

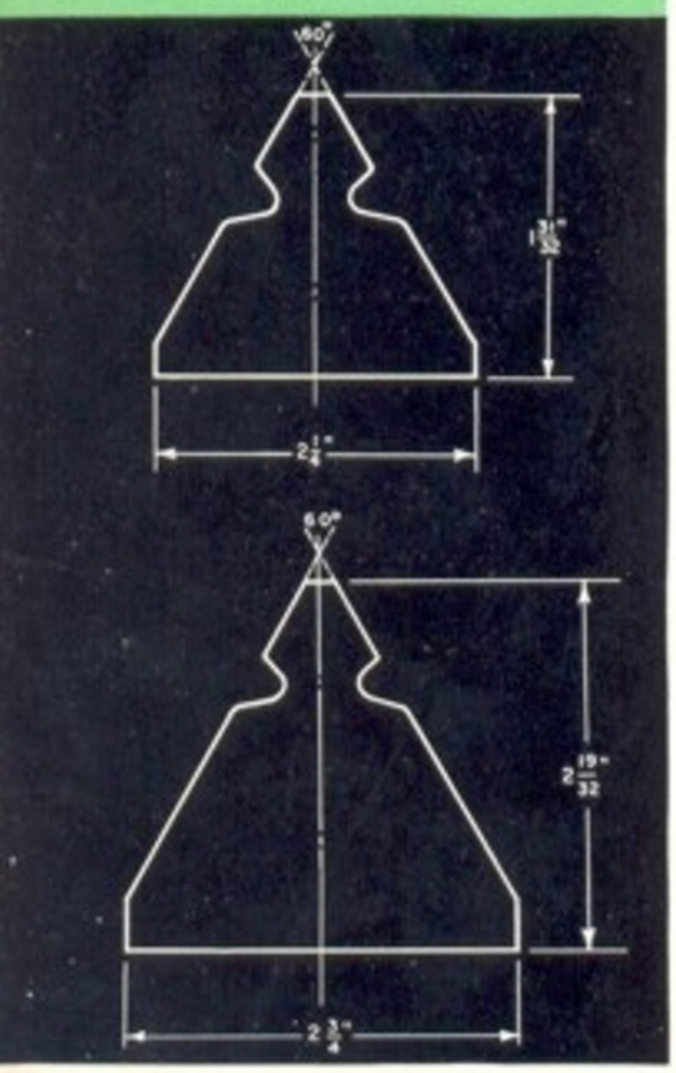

THIS EALING TRIANGULAR OPTICAL BENCH is being standardized on daily by university and research laboratories. It offers these advantages:

There are seven benches both with and without scales. These benches take any of ten different carriers. Forty accessories are available for use with these carriers. This flexibility is unmatched.

The bench profile that is an equilateral triangle in cross section was developed by Zeiss a half century ago and has not been improved on. It does not flex and distort readings. It is close to the bench and stable. The carriers are positively centered by gravity and lock without shifting position.

The interchangeability of benches, carriers and accessories means that simple sets can be ordered today and more elaborate components added tomorrow.

The benches are heavy and well planed. The carriers are accurately machined. Both are inexpensive. Therefore, these benches and carriers can be bought by a university physics department, for example, for general departmental use. Simpler components can be purchased for the elementary courses, while the more advanced courses and research projects can add the elaborate elements. The basic benches and carriers do not have to be replaced. This feature offers a striking overall economy compared to other systems.

Mounting Pins (22–785) are offered separately so that special apparatus, not necessarily optical, needing fast, convenient, alignment can be shop-built for mounting on the benches and carriers.

Benches

The benches are made of steel and plated for rust-proofing. They are accurately planed. The depth of the equilateral triangular cross section of the $\frac{1}{4}$, $\frac{1}{2}$ and 1 metre benches is $1\frac{31}{32}$ inches and the base is $2\frac{1}{4}$ inches wide. The 2 metre bench is stiffened by increasing the depth to $2\frac{19}{32}$ inches and the base to $2\frac{3}{4}$ inches. The top profile of all benches is identical (see drawings).

The benches have slots running the length of each side to take the locking screws of the carriers.

The $\frac{1}{4}$ metre bench has two raised areas of the base machined as feet; the $\frac{1}{2}$ metre three; the 1 metre and the 2 metre have five.

For precise levelling of the benches without scales, the cross feet 22–710 are offered separately. Benches with scales are complete with levelling feet (as illustrated).

The $\frac{1}{4}$, $\frac{1}{2}$ and 1 metre benches have a socket drilled into each end so that by using the 22–720 Connector two or more benches can be joined to extend their length while maintaining their common axis.

Also the 22–722 Rotatable Connector can be used with the $\frac{1}{4}$, $\frac{1}{2}$ and 1 metre benches without scales.



EALING TRIANGULAR OPTICAL BENCH

***Top:* 22-702,** ½ *metre Bench with 22-710 Levelling Cross Feet fitted as accessories*
***Bottom:* 22-716,** *1 metre Bench complete with Scale and Levelling Cross Feet*

Benches

BENCHES WITHOUT SCALES

22–700 OPTICAL BENCH $\frac{1}{4}$ METRE LONG, WITHOUT SCALE
22–702 OPTICAL BENCH $\frac{1}{2}$ METRE LONG, WITHOUT SCALE
22–704 OPTICAL BENCH 1 METRE LONG, WITHOUT SCALE
22–706 OPTICAL BENCH 2 METRES LONG, WITHOUT SCALE
22–710 SET OF TWO LEVELLING CROSS FEET with 2 levelling screws in each foot for use with 22–700, 22–702, 22–704 and 22–706

BENCHES WITH SCALES

These benches are supplied with a heavy stainless white brass scale $\frac{1}{2} \times \frac{3}{8}$ inches running their length. This scale has millimetre divisions on each edge with centimetres boldly numbered and the half centimetre lines extended. The scale is attached to accurately machined cross feet that have levelling screws on them. The carriers (22–736, 22–738, 22–740, 22–752 and 22–762) for benches with scales have verniers that ride on the scale.

22–714 OPTICAL BENCH $\frac{1}{2}$ METRE LONG, WITH SCALE
22–716 OPTICAL BENCH 1 METRE LONG, WITH SCALE
22–718 OPTICAL BENCH 2 METRES LONG, WITH SCALE

BENCH CONNECTORS

22–720 CONNECTOR. Fits sockets drilled in ends of $\frac{1}{4}$, $\frac{1}{2}$ and 1 metre benches so that two or more benches can be joined to extend their lengths while maintaining their common axis.

22–722 ROTATABLE CONNECTOR. Fits sockets drilled in ends of $\frac{1}{4}$, $\frac{1}{2}$ and 1 metre benches. The pivot pin is removable so that the benches can be separated without removing the connector from the sockets. The benches without scales can be rotated from just under 90° in one direction through their common axis to just under 90° in the opposite direction. The 22–722 Connector is not suitable for use with benches with scales.



22–710

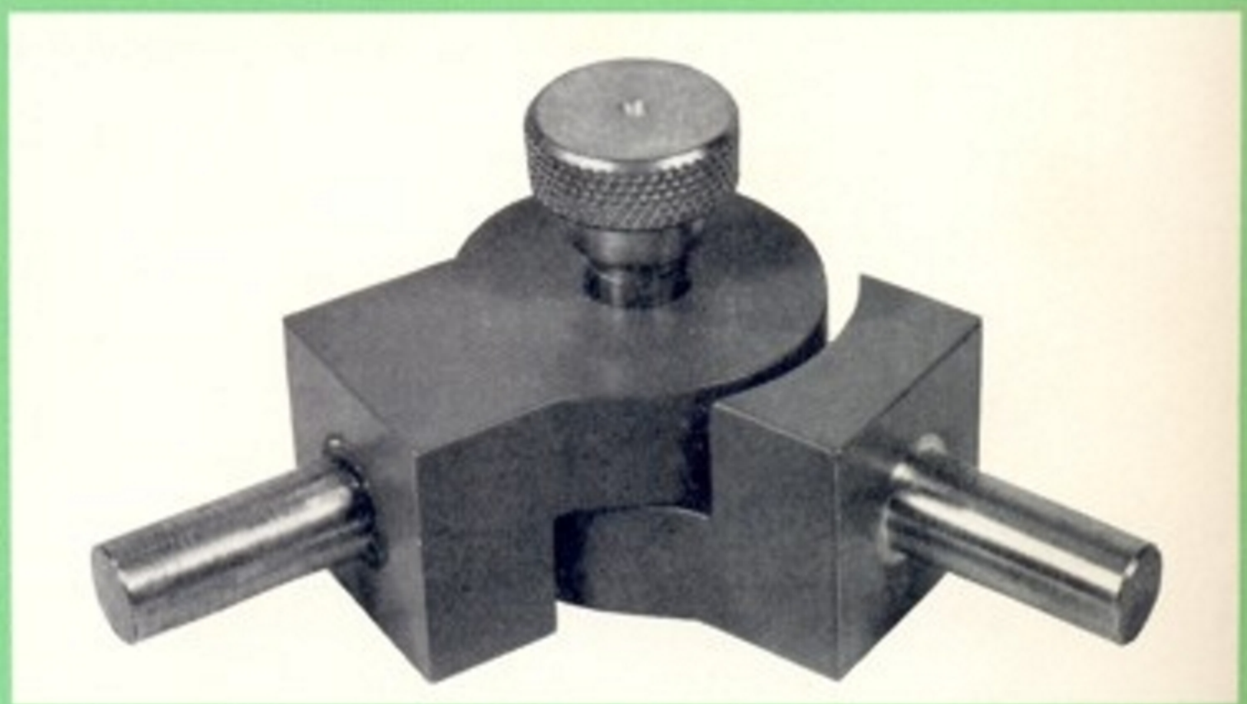

22–722

Carriers

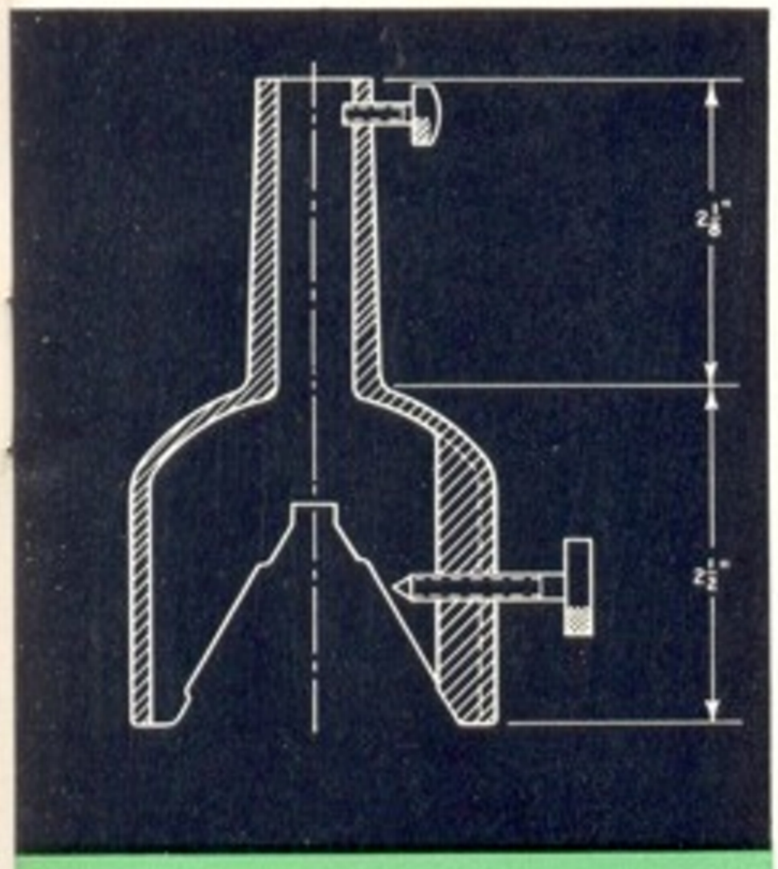

The Carriers are cast with cross section as shown in drawing and the faces bearing on the bench are accurately machined. There is a clamping screw operated by a large milled head that fits in the slot cut into the sides of the benches. The drawing gives the main dimensions of the carriers. The pillar has a locking screw and a hole to receive a pin 13·7 mm diameter. All accessories 22–770 to 22–925 pages 13 to 17 are mounted on pins of this diameter. Three carrier widths of 30, 60, and 90 mm are offered. The 60 mm width is normally used. The 30 mm carrier permits the close alignment of components. The 90 mm is used for components with a large overhang. The carriers for benches with scales have verniers which wipe the scale. There are two special carriers for vertical and transverse adjustment.



22–728 to 22–732

CARRIERS FOR BENCHES WITHOUT SCALES

These carriers do not have verniers and are for use with benches 22–700, 22–702, 22–704, and 22–706.

22–728	**CARRIER**	**30 mm WIDE**
22–730	**CARRIER**	**60 mm WIDE**
22–732	**CARRIER**	**90 mm WIDE**

CARRIERS FOR BENCHES WITH SCALES

These carriers do have verniers that rest on the bench scale and are for use with benches 22–714, 22–716, and 22–718. Vernier reads to 0·1 mm.

22–736	**CARRIER**	**30 mm WIDE WITH VERNIER**
22–738	**CARRIER**	**60 mm WIDE WITH VERNIER**
22–740	**CARRIER**	**90 mm WIDE WITH VERNIER**



22–750

CARRIER WITH VERTICAL TRAVEL

Base 60 mm wide. Adjustable stem is operated by a knurled knob and a spiral screw. Vertical travel is 1 inch.

22–750 CARRIER WITH ADJUSTABLE STEM

22–752 As 22–750 but with Vernier, reading to 0·1 mm.



22–736 to 22–740

CARRIER WITH TRANSVERSE MOTION

Base 60 mm wide. The transverse slide is operated by a milled head and has a total travel of 1 inch, that is ½ inch each side of centre. The component can be placed in either of 2 holes. In the centre hole the component can be travelled at right angles to the optical axis of the bench. With the component in the end hole, the holder can be rotated in the stem and the components can then be travelled along the optical axis for fine focussing, etc. The stem of this carrier is cut down to make room for the transverse mechanism.

22–760 CARRIER WITH TRANSVERSE MOTION

22–762 As 22–760 but with Vernier, reading to 0·1 mm.



22–760

LATHE BED OPTICAL BENCH

Heavy duty

Greater stability

Flexibility

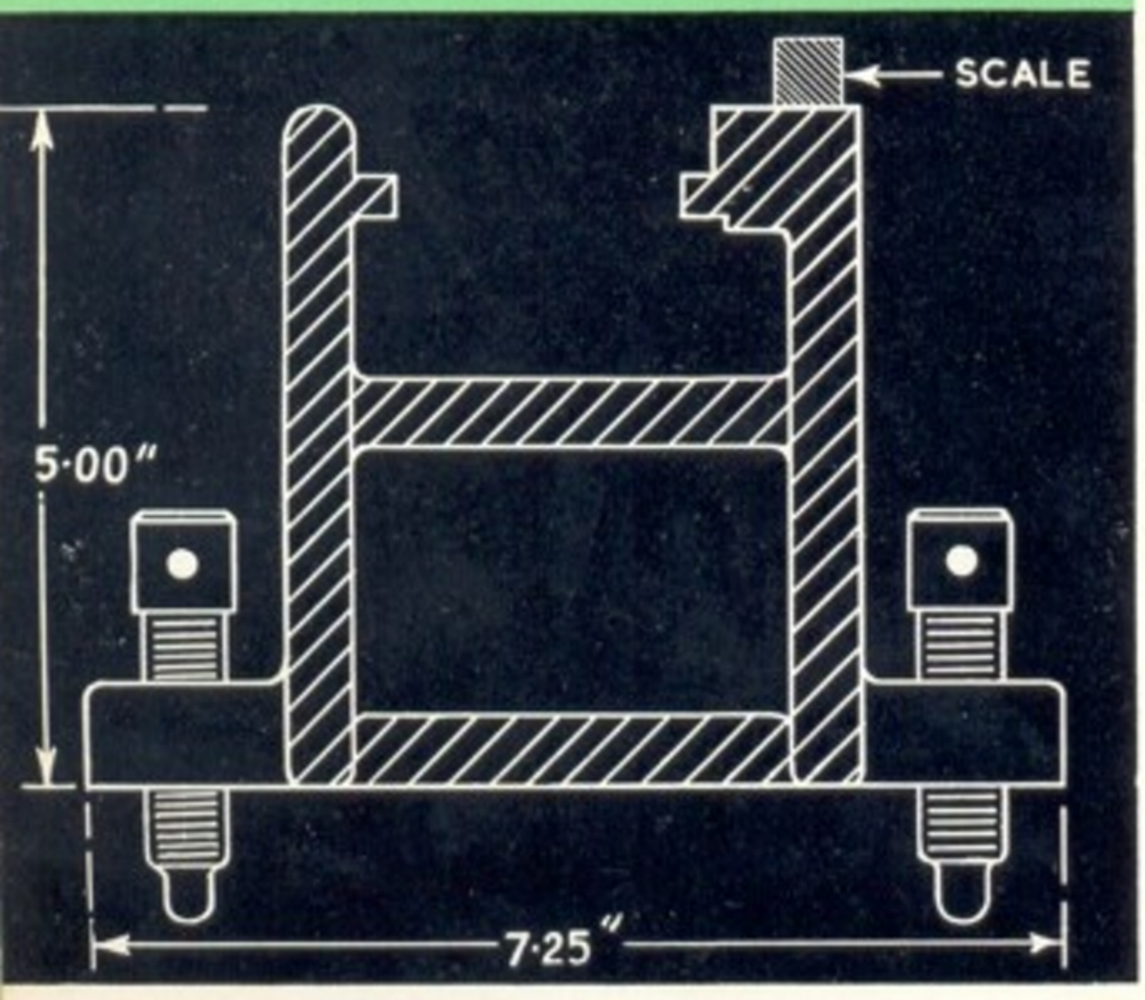

Where bulky or heavy components are to be used and greater stability and rigidity is demanded a lathe bed type optical bench is required. This bench represents, we believe, a unique value.

Note that the carriers of this bench take accessory stems 13·7 mm diameter and therefore all accessories 22–770 to 22–925 on pages 13 to 17 can be used.

Bench

The bench is 210 centimetres long. It is made of heavy cast iron and weighs 140 pounds. The top is open and the machined carrier slide is a half round and flat type. The bench is 4½ inches wide and the flanges are 5 inches deep. There are four levelling screws. The 200 cm engraved scale is on a heavy ½ inch square bar and is divided into millimetres with each centimetre numbered and the half centimetre lines extended.

22–950 2 METRE LATHE BED OPTICAL BENCH, as described.

22–951 1 METRE LATHE BED OPTICAL BENCH, as 22–950 but 1 metre long.

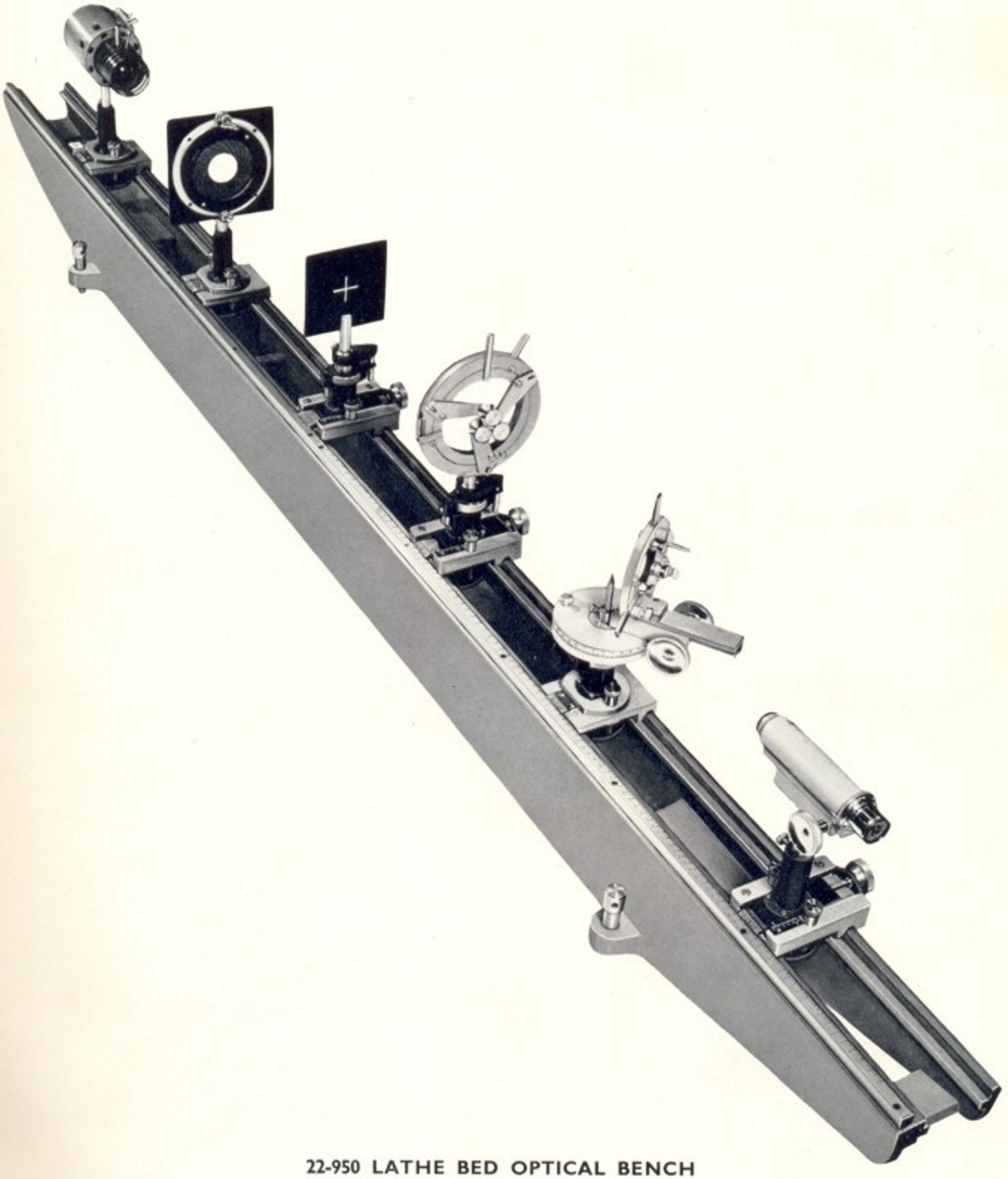

22-950 LATHE BED OPTICAL BENCH

Illustration shows Bench with a typical group of Carriers and Accessories

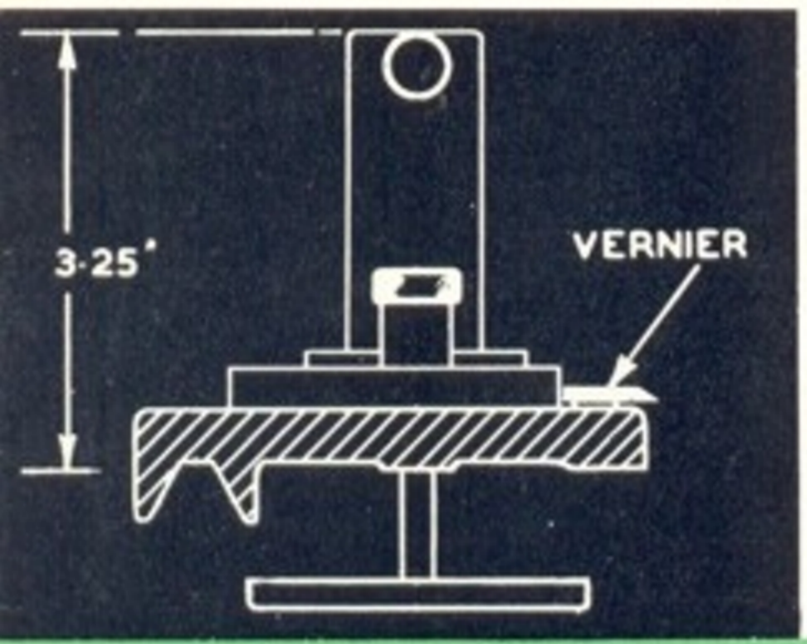

Carriers

The carriers may be fixed in any position on the bench by a clamp plate which locates against the underside of the bench slides. The clamp plate is operated by two knurled locking screws, one on each side of the pillar.

Each carrier is fitted with a positional vernier reading to 0·1 mm which is in wiping contact with the bench scale. The carriers are 70 mm wide.

Each carrier pillar accommodates the standard pin size 13·7 mm diameter. Therefore all accessories 22-770 to 22-925 on pages 13 to 17 can be used with this bench.

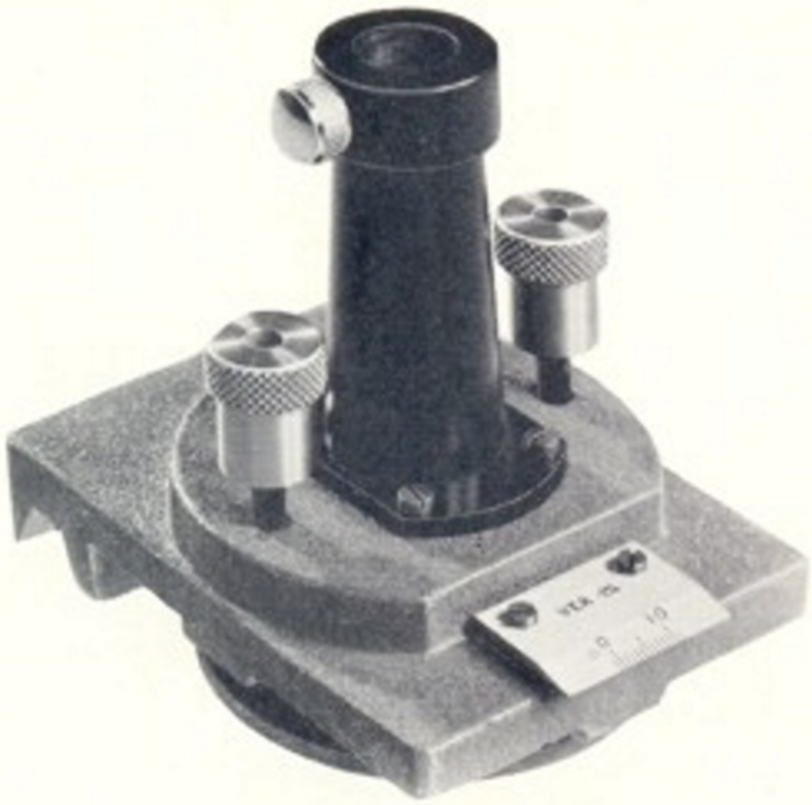

22–952 CARRIER WITH FIXED POSITION STEM



22–954 CARRIER WITH VERTICAL ADJUSTMENT vertical travel 1 inch



22–956 CARRIER WITH TRANSVERSE MOTION, scale reading 0–25 mm



22–958 CARRIER WITH VERTICAL AND TRANSVERSE MOTIONS, vertical travel 1 inch, transverse motion scale reading 0–25 mm

PRECISION LATHE BED OPTICAL BENCH

Economic precision

Accuracy 0·0025 inch

Versatility

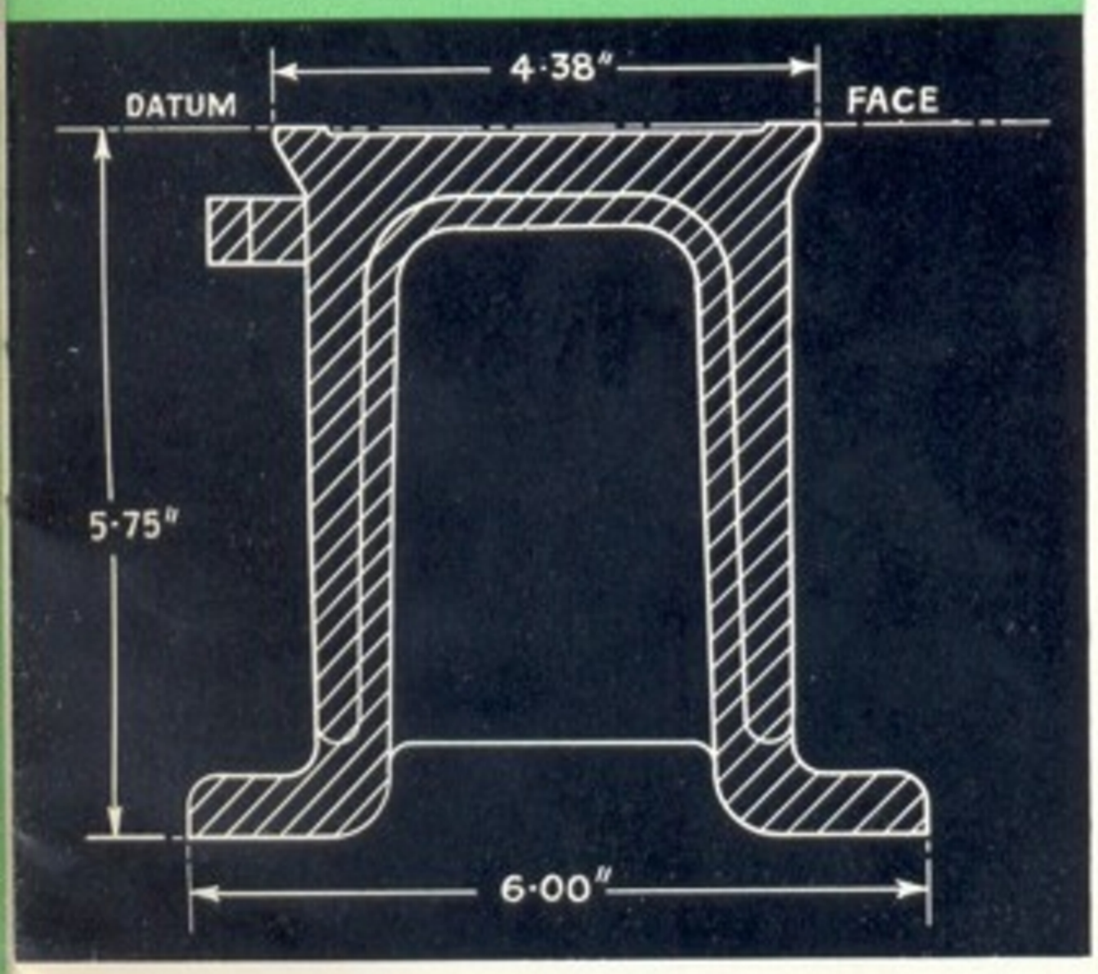

THIS PRECISION LATHE BED OPTICAL BENCH is manufactured in England by R. & J. Beck Limited. It bridges the gap between the benches of medium accuracy and the massive research benches.

It is machined to a guaranteed accuracy of two and one half thousandths inch over its entire length.

Five carriers have pillars that accommodate the standard pin size of 13·7 mm diameter. Therefore all accessories 22–770 to 22–925 on pages 13 to 17 can be used with this bench.

A sixth carrier accommodates certain of the research accessories listed on pages 24 to 27. The balance of the research accessories are listed as accessories for this bench and are supplied complete with special adapters to fit the profile of this bench.

Bench

This Precision Lathe Bed Optical Bench is a heavy Meehanite iron casting 216 cm long that weighs 140 pounds. It is specially heat treated between machining operations to relieve casting stresses. The coefficient of expansion is approximately $6{\cdot}77 \times 10^{-6}/°F$. The bench is supported on four levelling feet.

The bench is cast in box sections with the top closed. The top is $4\frac{1}{2}$ inches wide and the flanges are 5 inches deep.

The carrier slide is of dovetail section. It is machined to two and one half thousandths inch over its entire length.

A two metre stainless steel scale divided in millimetres and numbered every centimetre with half centimetre lines extended is fitted on one side of the bench.

22-965 PRECISION LATHE BED OPTICAL BENCH as described

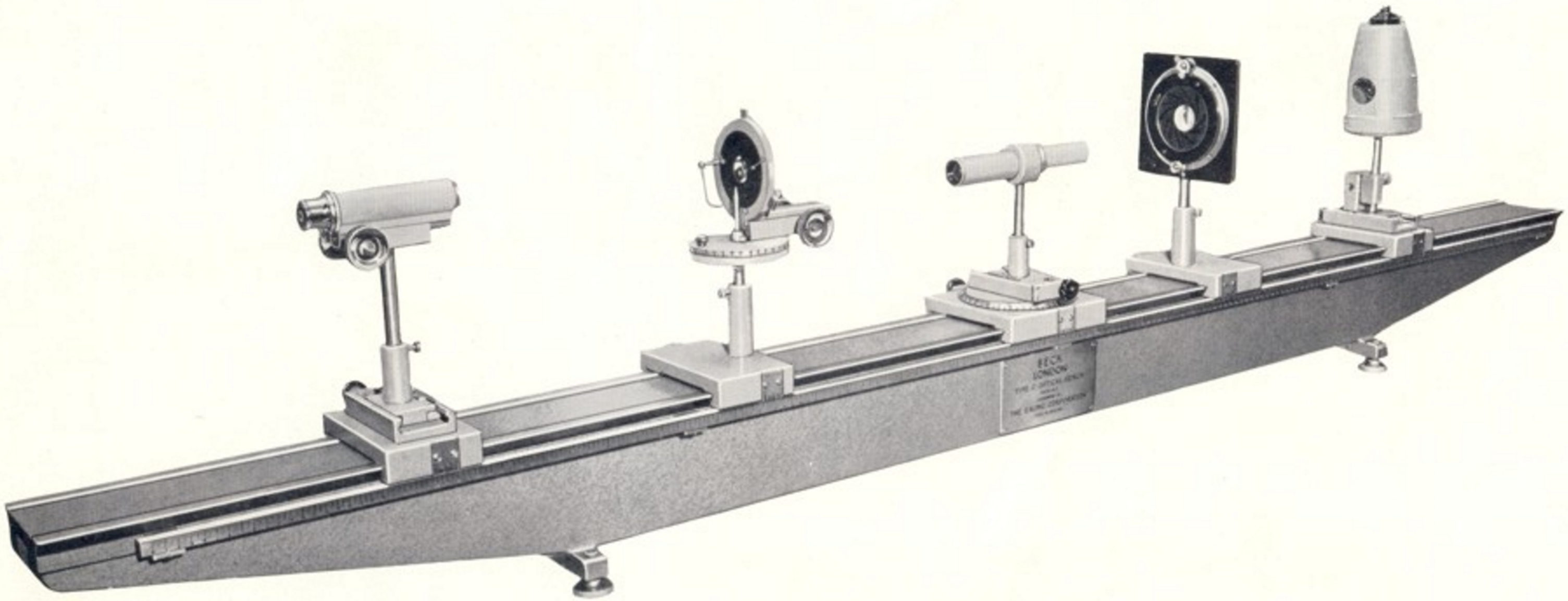

22-965 PRECISION LATHE BED OPTICAL BENCH

Illustration shows Bench with the five Carriers and a group of Accessories

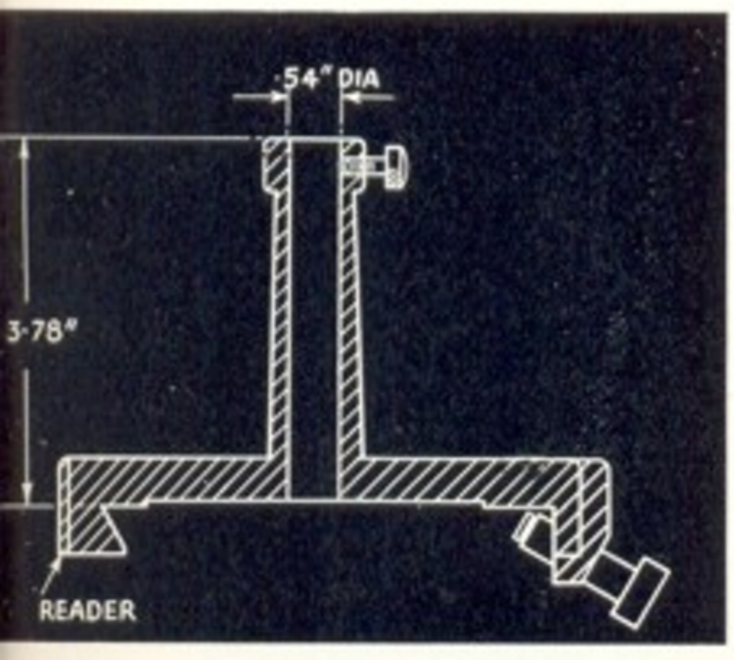

Carriers

All carriers are held against the bench dovetail by a spring loaded locking plunger. A kinematic design is used to improve their stability on the bench. Each carrier has a positional vernier scale reading to 0.1 mm.

22–970 CARRIER, RIGHT HAND. Fixed position stem offset to the right hand for use with 22–972 to reduce separation between accessories. Base 90 mm wide. Takes stems 13·7 mm diameter.

22–972 CARRIER, LEFT HAND. As 22–970 but to left hand.

22–974 CARRIER, TRANSVERSE MOTION. Transverse scale graduated 20–0–20 mm divided in mm. Operation by micrometer head reading to 0·02 mm. Takes stems 13·7 mm diameter. Base 90 mm wide.

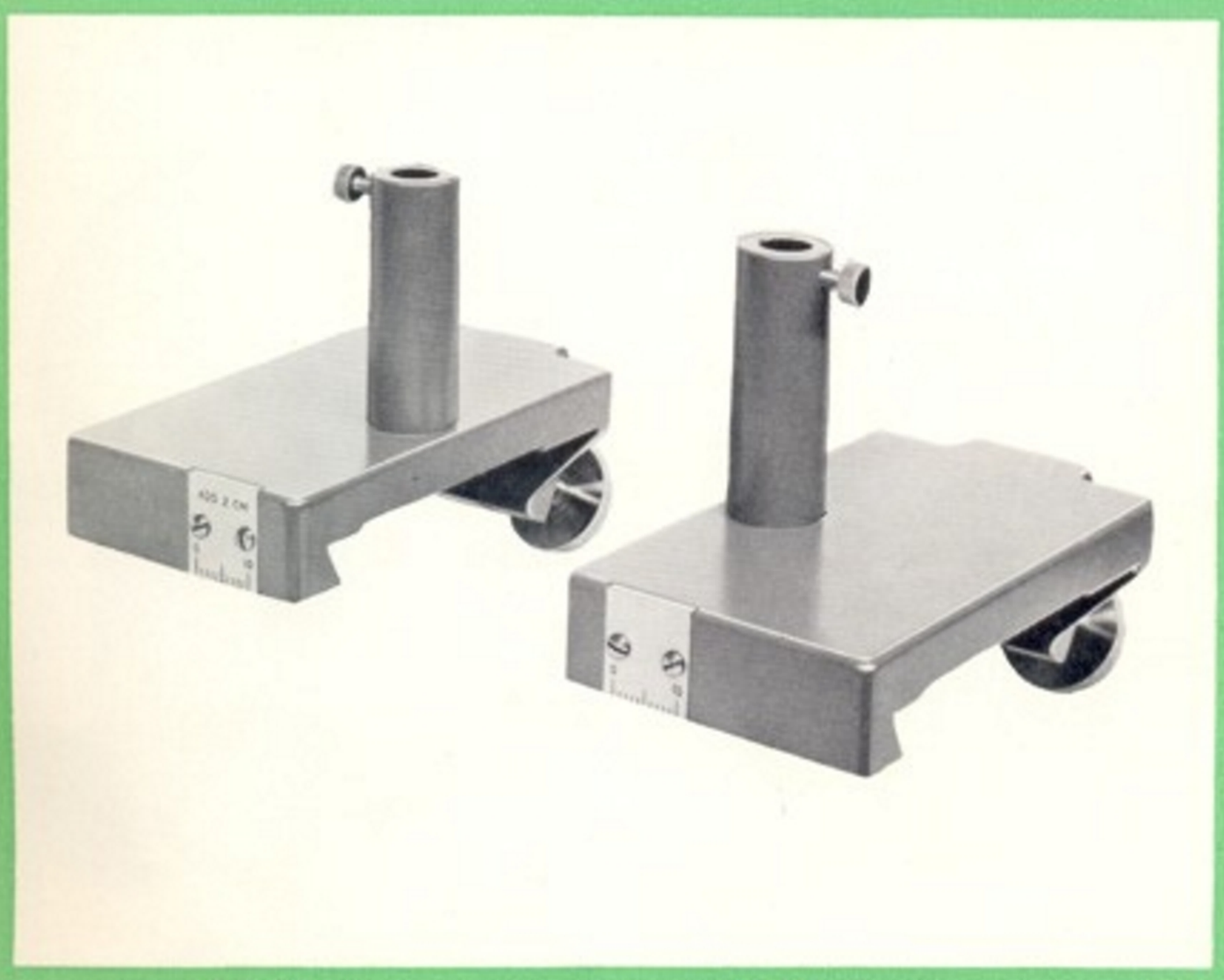

22–970 22–972

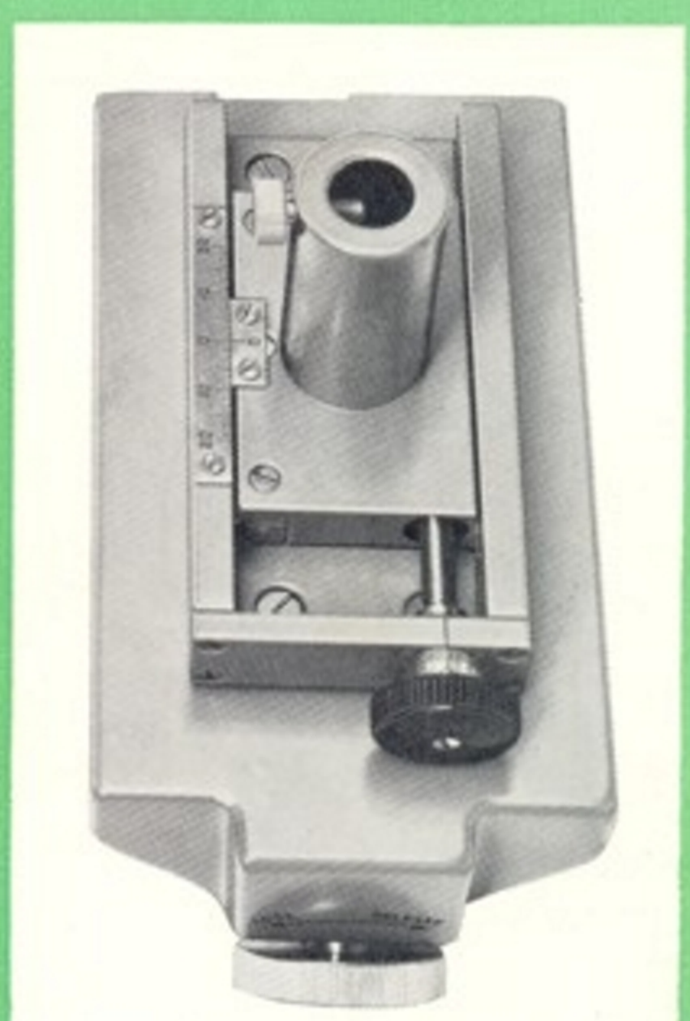

22–974

Carriers

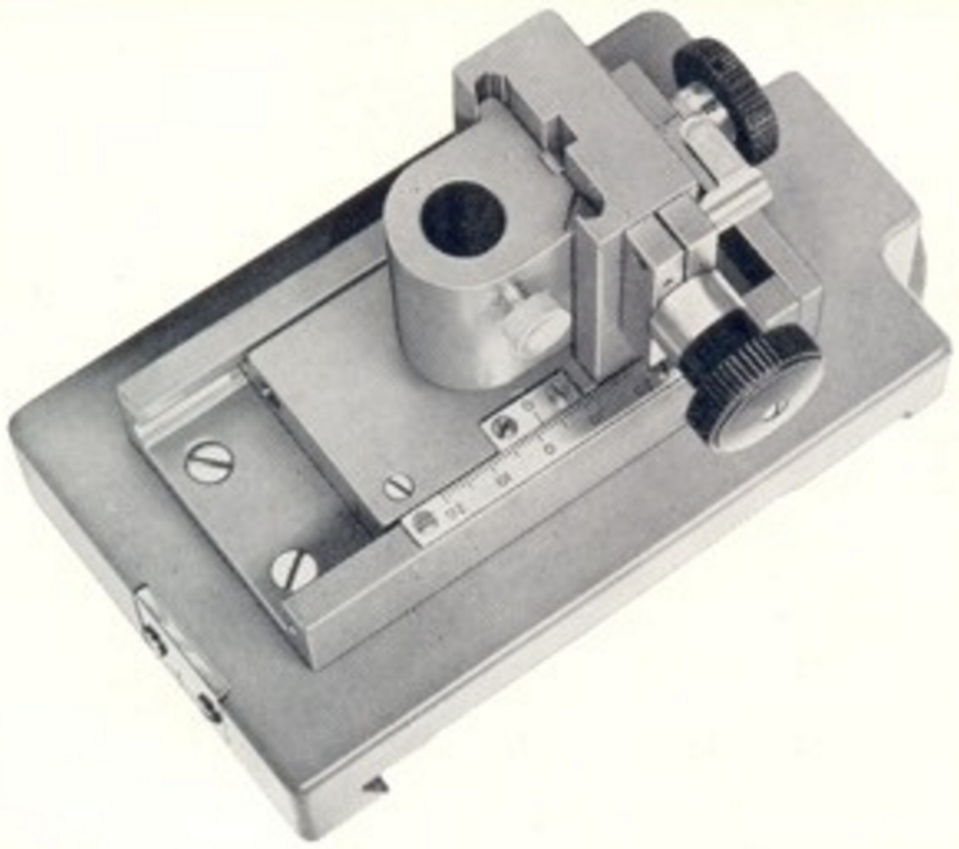

22–976

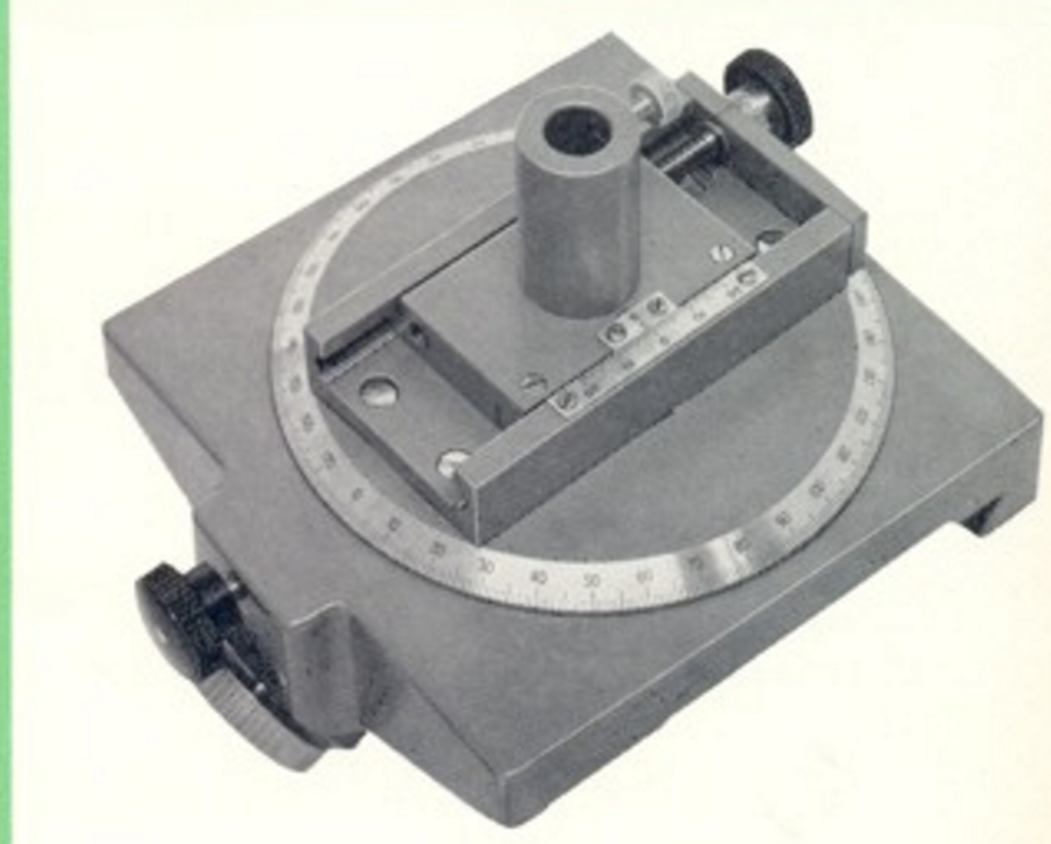

22–978

22–976 CARRIER WITH VERTICAL AND TRANSVERSE MOTION. Transverse adjustment as for 22–974. Vertical motion of 15–0–15 mm by rack and pinion with lock. Takes stems 13·7 mm diameter. Base 90 mm wide.

22–978 NODAL CARRIER. Circular table on top surface with a table divided 180–0–180 in degrees. The index line for reading the circular scale is engraved on the positional vernier plate. A transverse slide as on 22–974 is mounted on top of the circular table. Takes stems 13·7 mm diameter.

22–980 RESEARCH CARRIER. This carrier permits the use on this bench of most research accessories listed on pages 24 to 27. It is the 23–005 Centre Slide Carrier shown on page 23 with a base fitting appropriate to this bench profile. The centre of the optical axis of this carrier is 7 inches above the bench slides and therefore research accessories may be combined for use with standard accessories 22–770 to 22–925 listed on pages 13 to 17. The circular holder of the carrier is 5 inches internal diameter with 12 screw threads per inch. Therefore this carrier will accommodate the 23–015 Concentric Rings Set and the 23–018 Lens Chucks, listed with research accessories on pages 24 to 27. The 23–015 Rings Set in turn permits the use of the following Research Accessories: 23–017 Lens Chuck; 23–036 Calibrated Iris Diaphragm; 23–038 Condenser; 23–040 Collimator, 15 inch focus; 23–042 Collimator, 36 inch focus; 23–044 Microscope and 23–046 Telescope.

22–980 RESEARCH CARRIER, as described above.



22–980

Special Research Accessories

Certain of the research accessories listed on pages 24 to 27 which can not be used with the 22–980 Research Carrier described on page 12, have been mounted on special carriers to fit the 22–965 Precision Lathe Bed Optical Bench and are listed below. All have individual carriers for the 22–965 Bench.



22–988

22–982	**CARRIER WITH MICROMETER CENTRING.** As 23–013 listed on page 23 but with special carrier for 22–965 Bench.	
22–984	**LAMPHOUSE.** As 23–026 listed on page 25 but with special carrier for 22- 965 Bench.	
22–985	**PRECISION LAMPHOUSE.** As 23–027 listed on page 25 but with special carrier for 22–965 Bench.	
22–986	**MERCURY VAPOUR LAMPHOUSE.** As 23–029 listed on page 25 but with special carrier for 22–965 Bench.	
22–988	**NODAL SLIDE.** As 23–050 listed on page 27 but with special carrier for 22–965 Bench.	

STANDARD ACCESSORIES

ALL ACCESSORIES ARE MOUNTED ON STEMS 13·7 MM DIAMETER

22–765 **STORAGE RACK FOR HOLDING 10 ACCESSORIES.** Sturdy wooden rack for supporting 10 accessories vertically. This avoids damaging the components by placing them on the bench.

22–767 **STOP COLLAR.** Clamps in any position on the pillar of any unit. It thus holds the unit at a fixed height in its carrier. yet permits rotation about the vertical axis.

22–768 **HORIZONTAL HOLDER ADAPTER.** Enables any rod accessory to be mounted in a horizontal position. Also permits rotation about the vertical axis of the bench carrier.

22–769 **LATERAL DISPLACEMENT UNIT.** Enables any rod mounting accessory to be displaced (from the optical axis) in the horizontal plane.

22–770 **SIMPLE LAMPHOUSE.** Metal Housing with circular aperture. Complete with cord.

22–775 **PROJECTION LAMPHOUSE.** A precision light source with 6 volt, 48 watt bulb with a multiple coiled filament of the solid source type. (For spare bulb see 22–776.) It has a corrected condenser with focussing adjustment, iris diaphragm, slots for light filters or neutral screens, and 2 milled heads at the back of the housing to centre the lamp filament accurately in relation to the condenser and iris diaphragm. Supplied complete with a transformer with dimming control for operation on 115 volts a.c. or 220 volts a.c.

22–776 **REPLACEMENT BULB FOR 22–775.** 6 volt. 48 watt bulb with multiple coiled filament of the solid source type.

22–780 **BENCH STAND.** The standard pillar that is fitted to the carriers is mounted on a heavy free standing base. It is used to hold equipment such as light sources beyond the end of the bench to save bench room. Or it can hold components offset from the bench axis for work with beam splitters, etc.



22–768



22–770



22–775



22–780

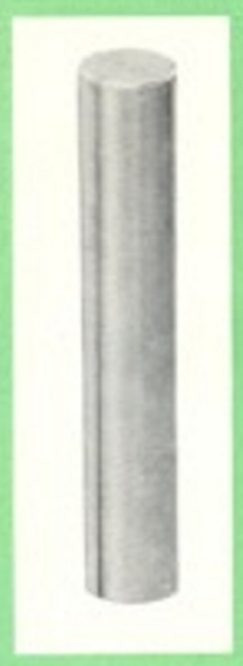

22–785



22–790

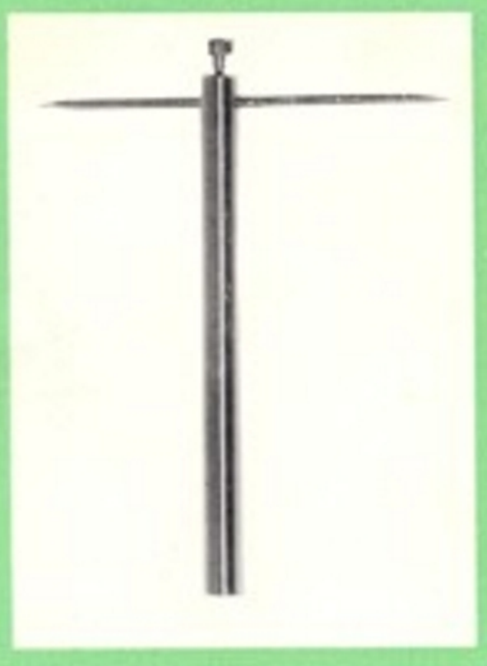

22–792



22–795



22–800

22–785 **MOUNTING PIN.** As used to support all components. 5 inches long. 13·7 mm diameter. To enable users to mount their own components for bench use.

22–790 **TABLE.** Four inches diameter supported on mounting pin. For holding such components as prisms, Diffraction Grating 22–890 etc.

22–791 **GRADUATED ROTATING TABLE.** A simple flat circular table engraved every degree through 360° rotating against fixed index (see table portion illustrated in 22–925).

22–792 **CORRECTION ROD.** The rod is exactly 15 cm long. It is carried in a hole with lock screw on a special length mounting pin. It is placed between adjacent units to establish the true axial separation between the two units. The correction between this true distance and the indicated scale distance is then applied to future scale readings.

22–795 **CONDENSER.** High quality lens 2¾ inches diameter 3 inch focus, mounted in a baffle plate for shielding extraneous light.

22–800 **PROJECTION LENS.** High quality achromatic combination 1¾ inch aperture with a 4 inch focus mounted in a baffle plate for shielding extraneous light.

22–805 **COLLIMATOR.** For producing parallel rays of light, 1 inch aperture, 7 inch focus fitted with a cross-line graticule.

22–807 **COLLIMATOR 15 INCH FOCUS.** As 23–040 (page 26) but in collar for triangular bench mounting.

22–810 **5 CM SLIDING GRIP LENS HOLDER.** A simple, strong, efficient holder for lenses up to 5 cm diameter. The bottom vee and the top support have deep grooves for lens edges. The top support slides on the two vertical uprights and has a locking screw.

22–812 **10 CM SLIDING GRIP LENS HOLDER.** Similar to 22–810 but for lenses up to 10 cm diameter.

22–815 **SPRING GRIP LENS HOLDER.** For holding lenses up to 5 cm diameter. Lens is inserted between two jaws which are operated by a knurled head controlling a rack and pinion movement.

22–820 **SELF CENTRING LENS HOLDER.** For lenses up to 10 cm diameter. The 3 points of the lens holder are anchored to a fixed ring and attached by pins in grooves to the spring loaded, rotatable outer ring. When the top levers are pinched with one hand, the rotatable ring is moved and the jaws open. When the levers are released the lens is gripped at 3 points by jaws with deep grooves and the centre of the lens is automatically brought to the centre of the holder. This holder is particularly convenient when lenses of different diameters are being used because the lenses can be quickly changed and automatically located in the optical axis without making further adjustments.

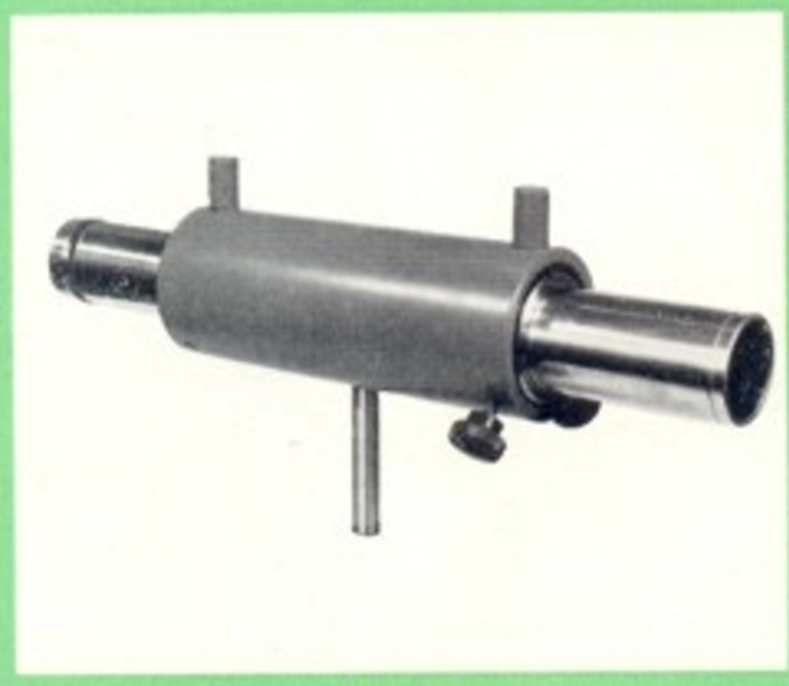

22–807



22–810

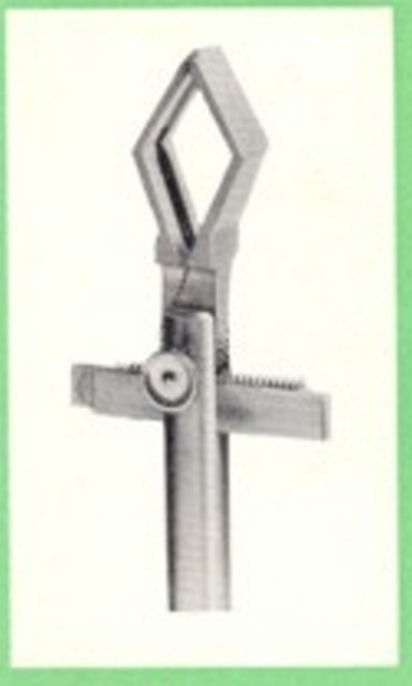

22–815

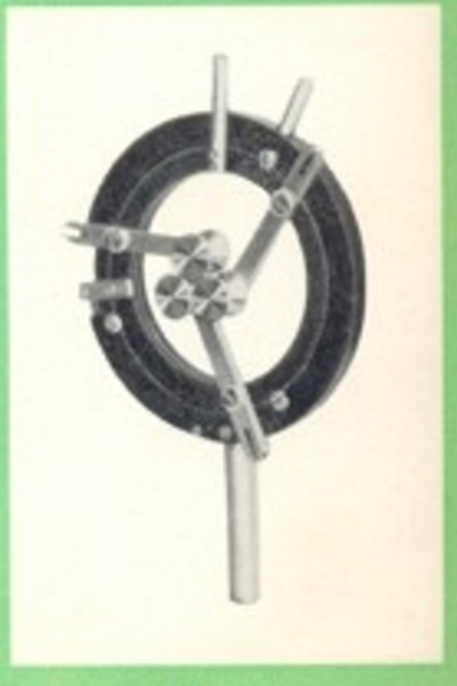

22–820

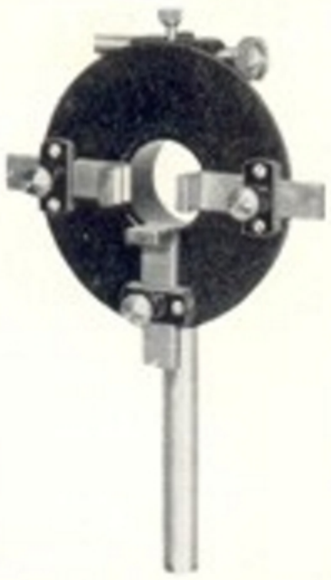

22–825



22–830



22–835



22–840

22–825 **ROTATABLE LENS HOLDER.** The maximum opening of the chucks is 2¼ inches. The aperture in the baffle plate is 1¼ inches. The 3 chucks adjust individually and have locking screws. This permits the precise alignment not only of lenses but of squares, bi-prisms, etc., which can not only be centred but de-centred if required. The entire holding plate, which serves as an extraneous light baffle. can be rotated through 10 degrees and has a locking screw. The rotating screw is spring loaded so that the optical element can be slightly moved while the image is under observation.

22–830 **TRANSVERSE MOTION LENS HOLDER.** For lenses up to 6 cm diameter. The 3 chucks have deep vee grooves and adjust individually for centring or de-centring. The entire holder has a transverse motion of 10 mm operated by a milled head.

22–835 **IRIS DIAPHRAGM LENS HOLDER.** For lenses up to 7·5 cm diameter A fast, convenient mount with the added advantage that no light passes except through the lens. The leaves of the iris diaphragm are strong and will hold any lens with flat edges. The lens is merely placed in the centre of the aperture and the leaves closed upon it. The iris diaphragm is conveniently operated by a large turnbutton engaging a gear drive. A milled screw locks the iris diaphragm at the desired opening.

22–840 **CENTRING MICROSCOPE OBJECTIVE HOLDER.** Takes any standard microscope objective. The screwed flange that receives the objective is eccentrically spring loaded and perfect centration can be achieved by 2 milled head screws working against the spring loading.

22–842 **FOCUSSING AND CENTRING MICROSCOPE OBJECTIVE HOLDER.** Takes any standard microscope objective. Centres as 22–840. The holder can then be focussed by rack and pinion through a travel of 1 inch.

22–845 **CENTRING POINT.** An extra length pin tapered to a point with the end painted black.

22–850 **CROSSLINE BAFFLE.** Two slits form a cross in a large metal baffle that shields extraneous light.

22–855 **ADJUSTABLE SLIT.** Simple type with one jaw fixed and the other spring loaded. Operated by a milled head. The length of the slit is 0·3 inch and it is surrounded by a baffle plate to shield extraneous light.

22–860 **IRIS DIAPHRAGM.** Maximum aperture is 4 cm. Diaphragm is operated by a lever and is mounted on a large baffle.

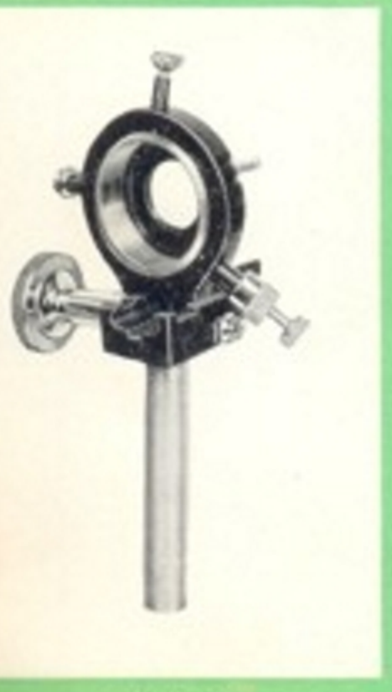

22–842

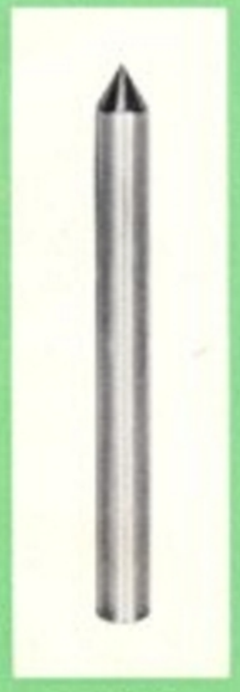

22–845



22–850



22–855



22–860



22–865



22–870



22–875



22–880

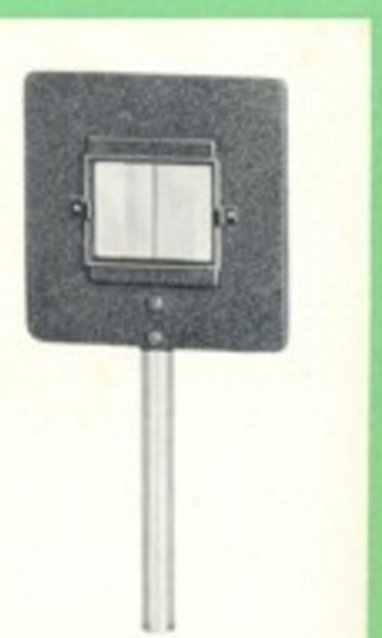

22–885

22–865 **FILTER HOLDER.** Two channels and bottom rest mounted on baffle for holding filters 2×2 inches. (For set of colour filters see 26–300, page 30.)

22–870 **SCREEN HOLDER.** A baffle with an opening $2\frac{3}{4} \times 2\frac{3}{4}$ inches and 2 spring clips for holding frosted glass screens, opaque screens, mounted graph paper, targets, etc.

22–875 **ROTATABLE SCREEN HOLDER.** Circular, rotatable baffle with a $\frac{3}{4}$ inch aperture and a spring clip. Primarily intended to hold clear or frosted microscope slides, but can also be used to hold glass or opaque screens, graph paper, targets, etc., where exact centration is to be determined by rotation.

22–880 **STAINLESS STEEL PLANE MIRROR.** Flat, highly polished stainless steel, 2 inches diameter mounted in a gimbal with a lock screw for use in precise alignment.

22–885 **FRESNEL BI-PRISM IN MOUNT.** 5×4 cm in a heavy mount for the study of interference between two sections of a wave front with diffraction largely eliminated.

22–890 **DIFFRACTION GRATING ON STAND.** 14,500 lines per inch for use on table 22–790.

22–895 **LIQUID TANK.** A fused glass vessel 4×4×1 inches with a tight fitting glass top and parallel sides for holding water or other solutions. It is carried in a cast metal holder with lips from which it is easily removable.

22–900 **FOUCAULT KNIFE-EDGE.** For diffraction experiments and for testing concave mirrors or lenses by the Foucault Knife-Edge technique. Consists of a spring loaded knife-edge acting against a fixed jaw. Beside this knife-edge and also mounted on the baffle is a metal shielded prism with an open side and a pinpoint opening through the baffle.

22–902 **PHOTOCELL.** For the development of prototypes of photoelectric instruments, also for the demonstration of the quantitative optical laws which form the bases of these instruments.

The photocell is of the selenium barrier layer type and is 35 mm diameter. The sensitive area is 30 mm diameter. The total sensitive area is 7 sq. cm.

The cell is mounted in a housing $3\frac{1}{4}$ inches diameter × $1\frac{1}{2}$ inch thick. The cowling shield against extraneous light is $1\frac{1}{2}$ inch diameter and 2 inches long. An iris diaphragm permits the varying of the amount of light reaching the cell. Terminals for connection to a microammeter are on the back of the housing.



22–890



22–895



22–900



22–902

BECK RESEARCH OPTICAL BENCHES

For years the Research Optical Benches manufactured by the old British firm of R. & J. Beck Limited have set the standard for the precise investigation of optical systems. They are magnificent instruments that have lavished on them the accumulated art of a century of optical instrument manufacture.

The Precision Research Bench has three slides all accurate to one half thousandth inch over their 2·3 metre length.

There has proven a need for a research bench of half this complexity, accuracy and price. Therefore Beck is introducing a second version with a single slide, accurate to one thousandth inch over its 2·3 metres with its price halved.

This new version of the research bench coupled with the 22–965 Precision Lathe Bed Optical Bench and the 23–000 Precision Research Optical Bench gives an unparalleled range of choice to users of this type of equipment.

RESEARCH OPTICAL BENCH

Accuracy 0·001 inch

Research precision with flexibility

One point should be clearly understood in choosing between this 22–990 Research Optical Bench and the 23–000 Precision Research Optical Bench. All carriers for the 23–000 Precision Bench must be hand fitted at the factory on the actual bench where they will be used in order to reach the high guaranteed accuracy. Therefore all carriers required for use with the Precision Bench must be ordered at the time that the bench is originally purchased.

However the 22–990 Research Bench has been designed to tolerances such that all research accessories can be ordered off the shelf and used on the bench without hand fitting.

This means that a 22–990 Research Bench can be ordered today with only the accessories actually required for its present application. Yet as a research programme expands or evolves further accessories can be purchased to meet these altered requirements. And these accessories can be ordered off the shelf and used on the bench with no special fitting required.

Bench

The Research Optical Bench is 2·3 metres long and is guaranteed to be accurate to one thousandth inch.

The bench is cast from Meehanite iron and is heat treated to release casting stresses and ensure straightness.

The top bar is 4·25 inches wide by 1 inch deep. The reinforcing flanges taper to a total depth of 10 inches. The bench weighs approximately 400 pounds.

The top bar has machined on it an inverted vee and flat type slide. Between the vee and flat is a tee slot for clamping the carriers.

A stainless steel scale is attached to the bench adjacent to the vee and runs the length of the bench. This scale is engraved in millimetres with each centimetre numbered and each half centimetre line extended. Positional verniers fitted to the various carriers permit reading of the scale to 0·1 mm. The micrometer inching attachment 23–023 refines this reading to 0·02 mm.

Benches of this accuracy are normally mounted on substantial pillars of poured concrete or similar material. Blueprints for the positioning of these pillars are supplied with each bench.

22–990 RESEARCH OPTICAL BENCH, as described.

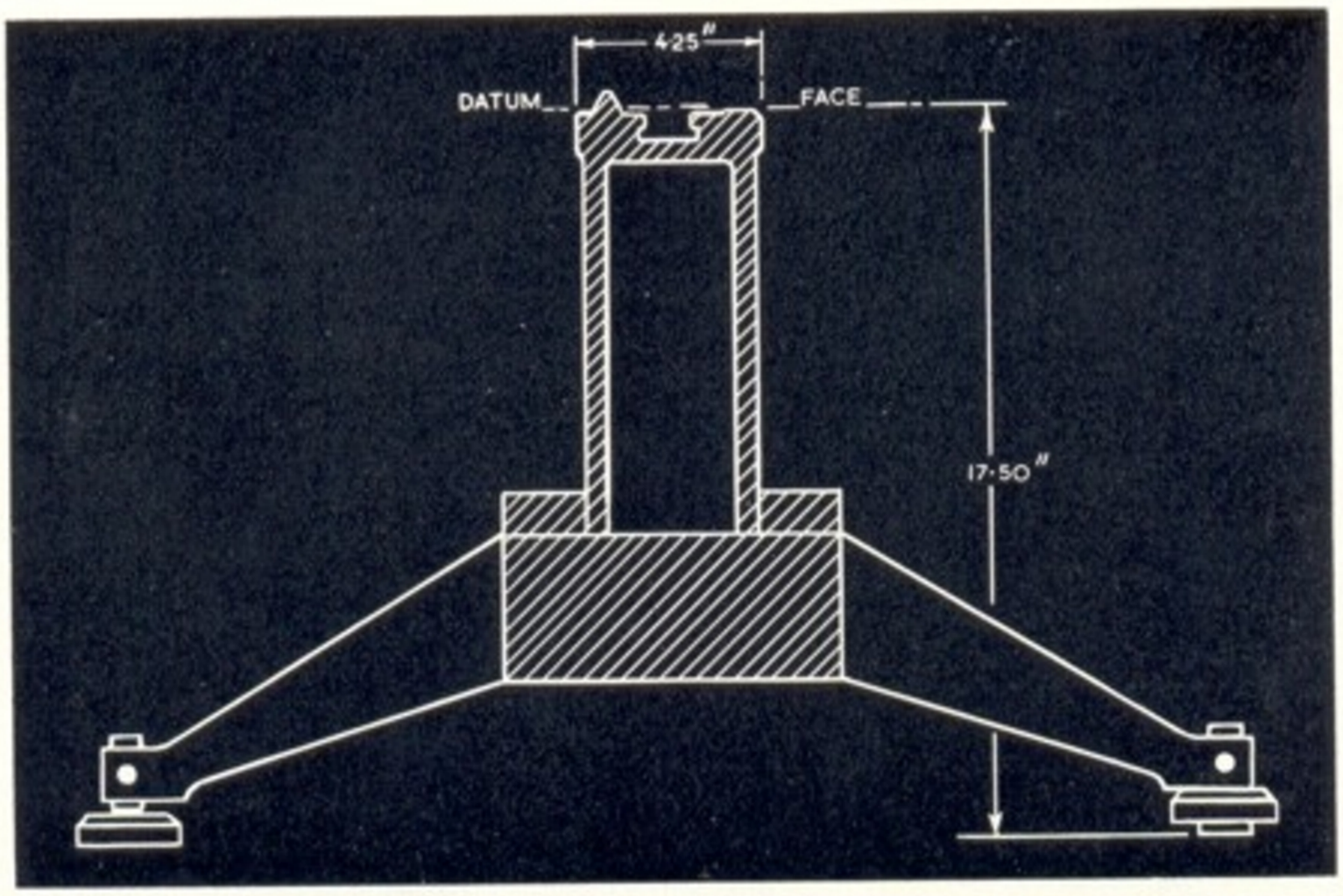

Carriers and Accessories

This 22–990 Research Optical Bench takes all research carriers and accessories listed on pages 23 to 27 except where it is specifically stated that the carrier or accessory can not be used with this bench.

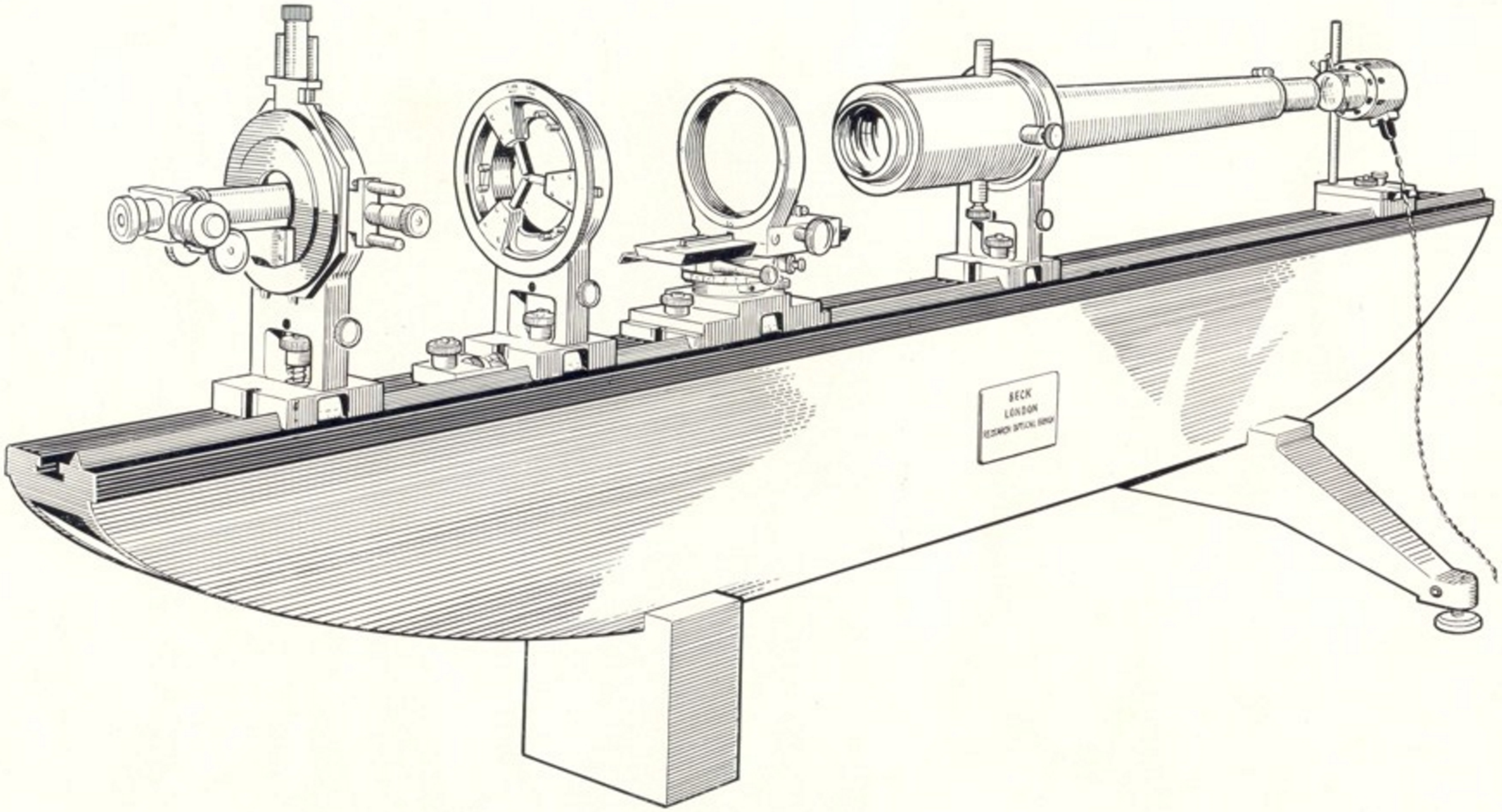

22-990 RESEARCH OPTICAL BENCH

Illustration of Bench incorporating some of the Carriers and Accessories available

BECK PRECISION RESEARCH OPTICAL BENCH

Ultimate precision

Three slides

Accuracy 0·0005 inch

Accessories hand fitted

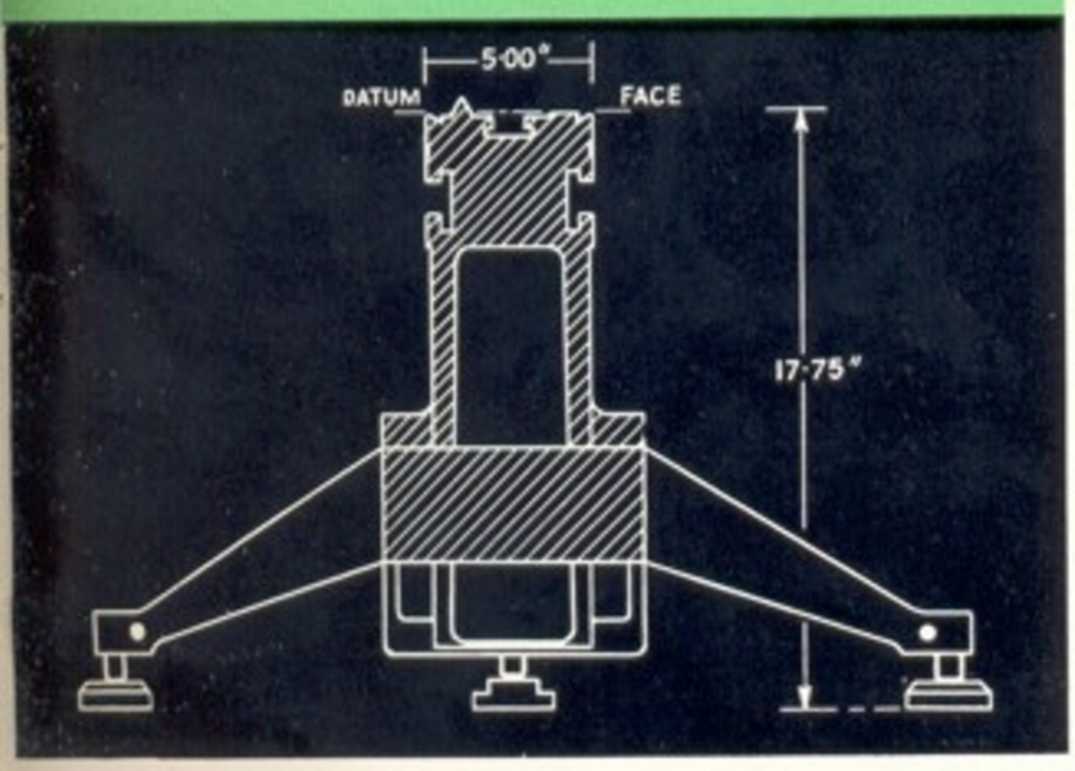

THE BECK PRECISION RESEARCH OPTICAL BENCH is 2·3 metres long, has three slides, one on top and one on each side, and is guaranteed to be accurate to one half thousandth inch.

The bench is cast from Meehanite iron and is heat treated to release casting stresses and insure straightness.

The top bar is 5 inches wide by 4 inches deep. The reinforcing flanges taper to a total depth of 16 inches. The bench weighs approximately 760 pounds.

Three separate slides are machined on the top bar. One is on top and one on each side. These three slides are provided so that by using one centre carrier and two each right and left side carriers, as many as five accessories can be brought into close juxtaposition without sacrificing the wide, sturdy carrier bases. This grouping is illustrated on the left centre of the bench in the photo on page 22. This feature adds substantially to the flexibility and usefulness of this bench and is unique to it.

The slide on the top of the bench is the inverted vee and flat type. Each side slide is a half dovetail and key way so that the carriers are positively located by gravity. Each slide has a tee slot for clamping the carriers.

A stainless steel scale is attached to each of the three slides and runs the length of it. This scale is engraved in millimetres with each centimetre numbered and each half centimetre line extended. Positional verniers fitted to the various carriers permit reading of the scale to 0·1 mm. The micrometer inching attachment 23–023 refines this reading to 0·02 mm.

A further unique feature of this bench is that it is supplied with an auxiliary bench 28 cm long and weighing 25 pounds. This bench has three slides and is machined and scaled exactly as the main bench. A key at one end of the auxiliary bench fits into the tee slot in the side face of the main bench. The auxiliary bench is fitted in the side face adjacent to the vee of the top slide of the main bench and is perpendicular to the major axis of the main bench. This is particularly useful when systems involving a beam splitter are being investigated. This auxiliary bench is shown on the right centre of the bench in the photo on page 22. Return of this auxiliary bench only, to the factory, permits subsequent fitting of additional carriers in optical alignment with those supplied initially.

Benches of this accuracy are normally mounted on substantial pillars of poured concrete or similar material. Blueprints for the positioning of these pillars are supplied with each bench.

23–000 BECK PRECISION RESEARCH OPTICAL BENCH, complete with auxiliary bench, as described.

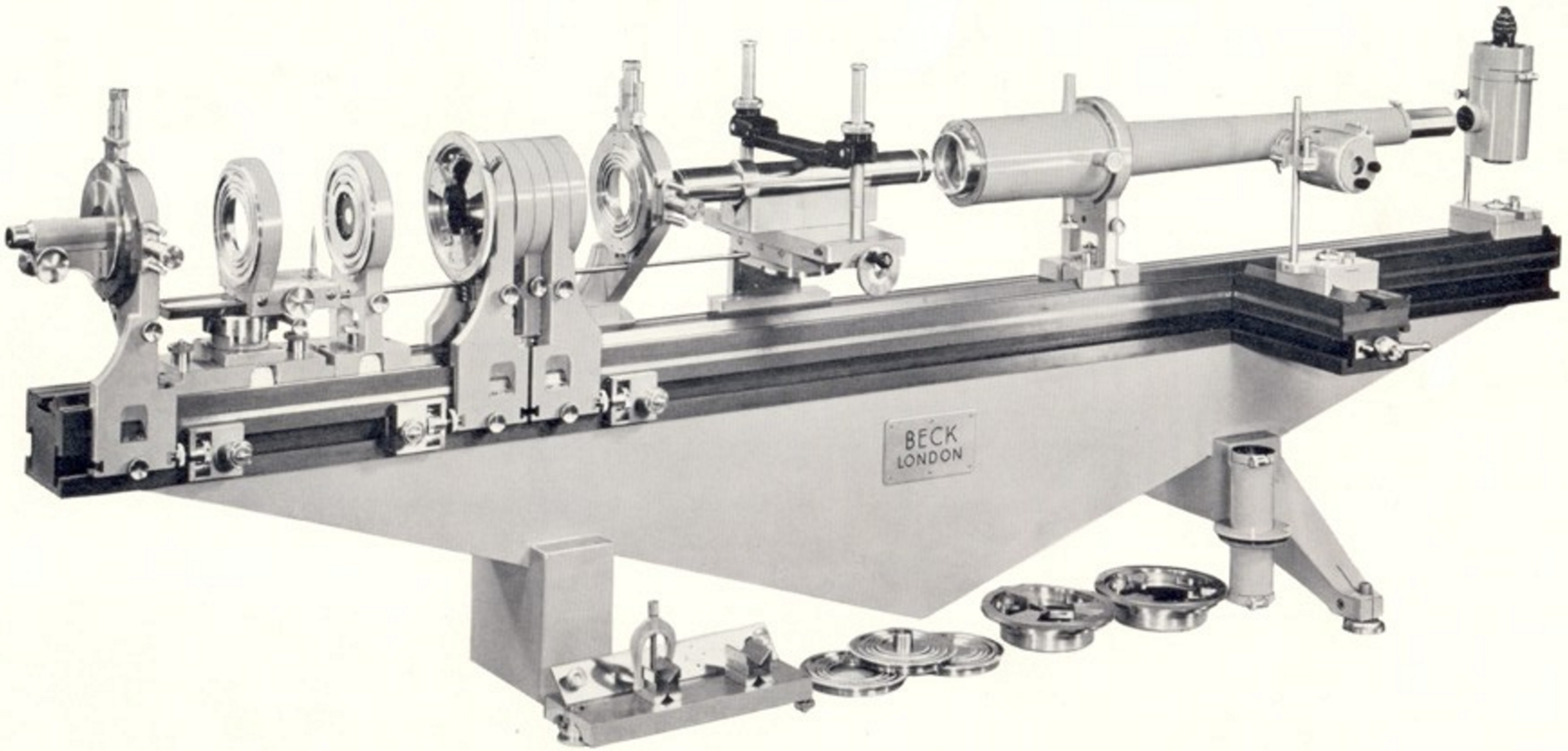

23-000 BECK PRECISION OPTICAL BENCH

Illustration shows Bench with a typical group of Carriers and Accessories

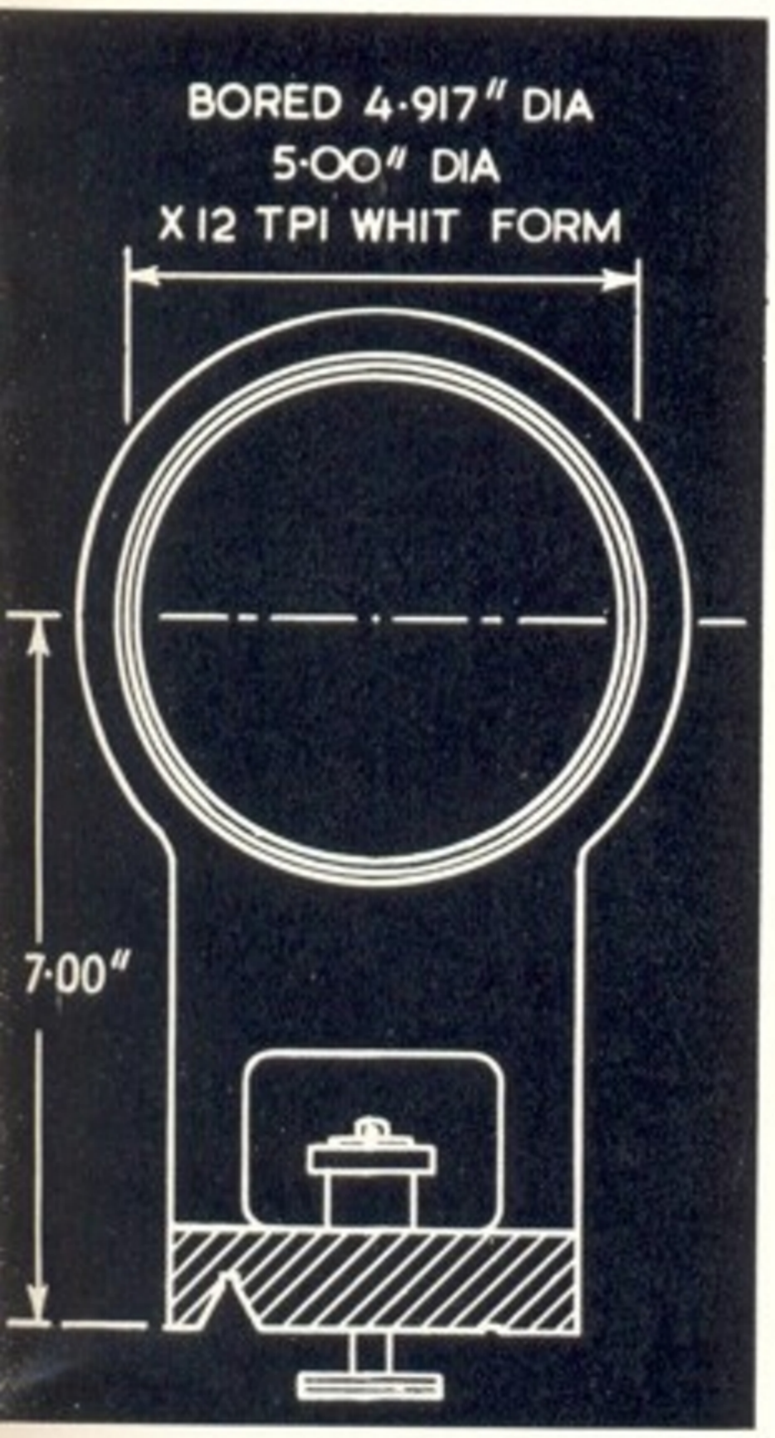

Research Carriers

Note that the thread form used throughout all of the research carriers and accessories is that specified by the Royal Photographic Society whose standards are quoted in English dimensions.

All research carriers are threaded to take either the 23–015 Concentric Rings Set and the 23–017 or 23–018 Lens Chucks. The rings set screws into the carriers and holds such accessories as microscopes, telescopes, collimators etc. or other apparatus supplied by the user. The lens chucks screw into the carriers and hold lenses as well as miscellaneous apparatus.

Each carrier has a positional vernier scale screwed to its face, in wiping contact with the bench scale, that reads to 0·1 mm. A clamp locks the carrier to the bench.

Each carrier has on either side a tee slot. The 23–023 Micrometer Inching Device locks in either of these slots and permits fine adjustment of the carrier. The inching device reads direct to 0·02 mm and can be estimated to half that figure.

A unique feature of these research carriers is that provision is made for locking a group of carriers together in relation to each other yet leaving them free so that several carriers can be moved at the same time as a unit on the bench. The photo on page 22 shows seven carriers and the 23–055 Precision Alignment Table locked together on the left end of the bench.

To permit this movement of a group of carriers a hole is drilled in each carrier just below the main opening. A coupling rod is passed through this hole and a knurled knob locks the carrier to the coupling rod. An assortment of coupling rods of various lengths is supplied with each research bench.

23–005 CARRIER FOR CENTRE SLIDE

23–008 CARRIER FOR SIDE SLIDE, RIGHT HAND. (Note that this carrier can not be used with the 22–990 Research Bench since the bench does not have side slides.)

23–009 CARRIER FOR SIDE SLIDE, LEFT HAND. (Note that this carrier can not be used with the 22–990 Research Bench since the bench does not have side slides.)

23–011 CARRIER WITH MICROMETER CENTRING, LEFT HAND. (Note that this carrier can not be used with the 22–990 Research Bench since the bench does not have side slides.) Threaded to take the 4 inch diameter ring of the 23–015 Concentric Rings Set or the 23–017 Lens Chuck. Two micrometers work in two planes perpendicular to the optical axis. Each has a travel of 25 mm and reads to 0·02 mm. Mounted on a base for the side slide.

23–012 CARRIER WITH MICROMETER CENTRING, RIGHT HAND. As 23–011.

23–013 CARRIER WITH MICROMETER CENTRING. As 23–012 but mounted on base for the centre slide. (Note that this carrier can also be used on the 23–000 Precision Research Bench.)



23–005



23–008

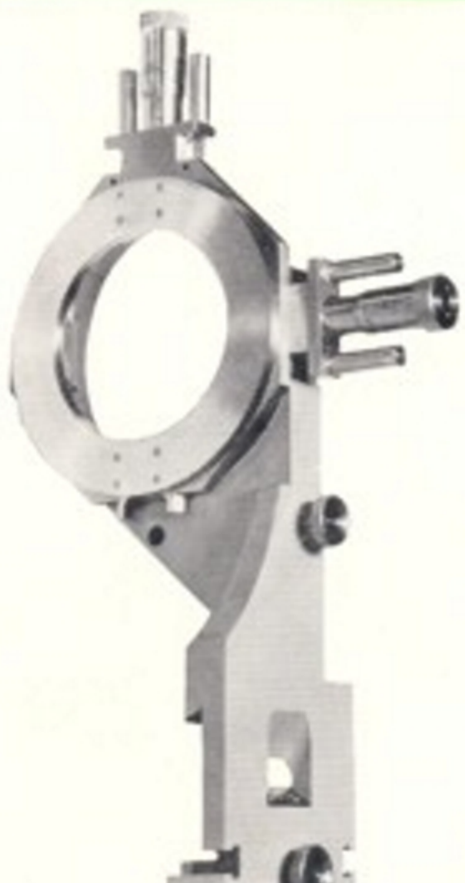

23–012

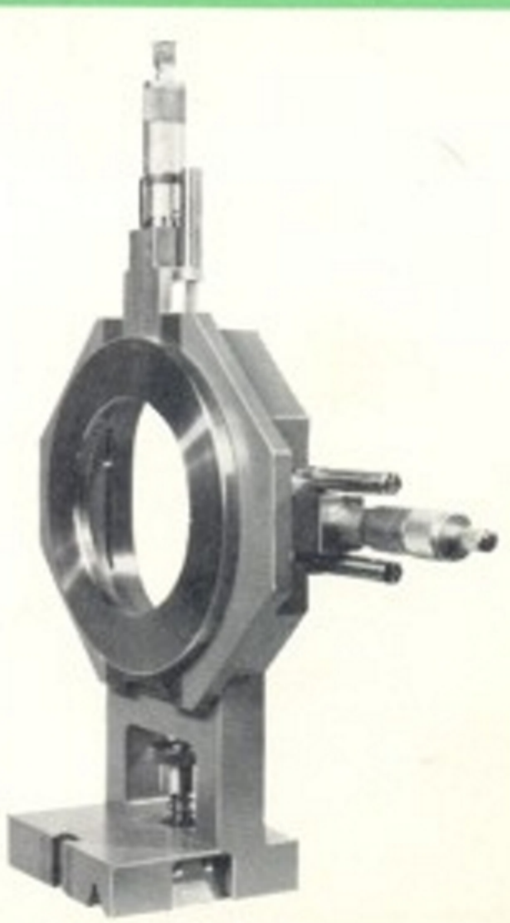

23–013

Special requirements will be quoted on request.

Accessories for Research Carriers

23–015 CONCENTRIC RINGS SET. These ring sets screw into each of the research carriers. They hold not only such accessories as microscopes, telescopes, collimators, etc. that are supplied mounted in appropriate rings. but special apparatus assembled by the user can also be mounted in rings. Each set consists of four rings and three centre fittings. These parts are (a) ring 5·0 inches in diameter × 12 threads per inch (b) ring 4·0 inches diameter × 12 t.p.i., (c) ring 3·5 inches diameter × 12 t.p.i., (d) ring 3·0 inches diameter × 24 t.p.i., (e) solid centre plug 2·5 inches diameter × 24 t.p.i., (f) centre plug 2·5 inches diameter × 24 t.p.i., with sleeve to accept standard microscope eyepieces and (g) centre ring 2·5 inches diameter × 24 t.p.i., with a threaded aperture to accept standard microscope objectives.

23–014 SINGLE REDUCING RING. With 4 inch internal threaded diameter.

23–016 SINGLE REDUCING RING. With 2·5 inch internal threaded diameter.

23–017 LENS CHUCK. This chuck has a four inch threaded diameter and screws directly into the 23–012 and 23–013 Carriers with Micrometer Centring. It has three adjustable arms. Each arm has a vee groove in the end for accepting the edges of lenses. Also the arm ends are squared for holding various pieces of apparatus. The effective diameter of the jaws is adjusted by means of a large milled ring. The operative part of the chuck is locked into its outer threaded section by four locking screws. If it is desired to rotate the chuck in its mount, these screws may be slackened, the chuck rotated to the desired position and the screws re-tightened.

The chuck accommodates lenses from 6·5 mm (0·25 inch) to 75 mm (3 inches) diameter. The 23–017 Lens Chuck can be adapted for mounting into the 5 inch carriers 23–005, 23–008 and 23–009 and the 23–050 Nodal Slide by using it with the 5 inch ring (a) of the 23–015 Concentric Rings Set or the 23-014 Ring This ring has an outer threaded diameter of 5 inches which screws into the carriers and an inner threaded diameter of 4 inches which accepts the 23–017 Lens Chuck.

23–018 LENS CHUCK. Similar to 23–017 but has a 5 inch threaded diameter. Fits directly into the 23–005, 23–008 and 23–009 Carriers and 23–050 Nodal Slide. This chuck accommodates lenses from 63·5 mm (2·5 inches) to 100 mm (4 inches).

23–023 MICROMETER INCHING DEVICE. Each research carrier has a tee slot in either side of its base. The end of this inching device is placed in that slot and a milled ring locks it securely in place. The inching device is then locked to the bench slide by a second milled screw. Thus, by operating the micrometer head, fine, precise motion is given to the carrier. The micrometer reads to 0·02 mm and can easily be estimated to half that.



23–015

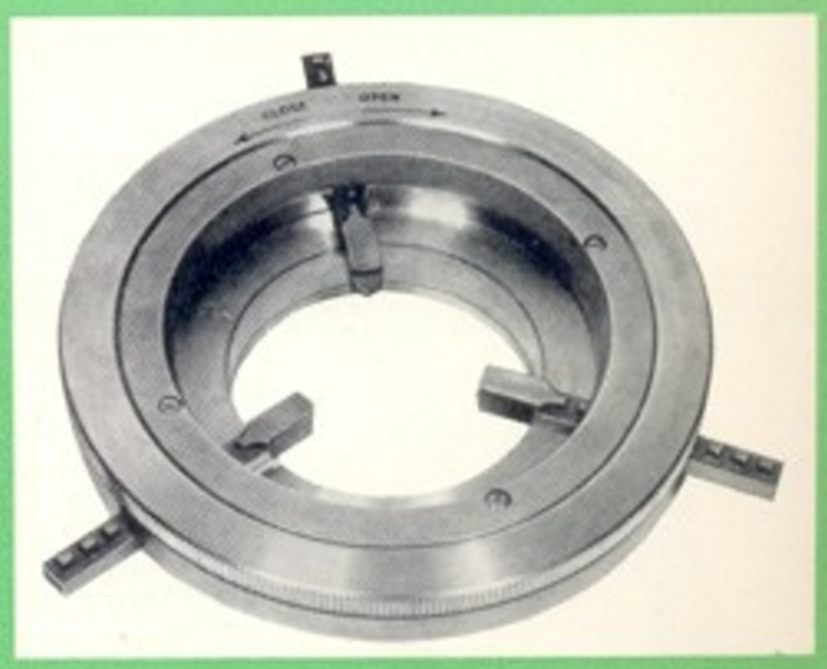

23–017

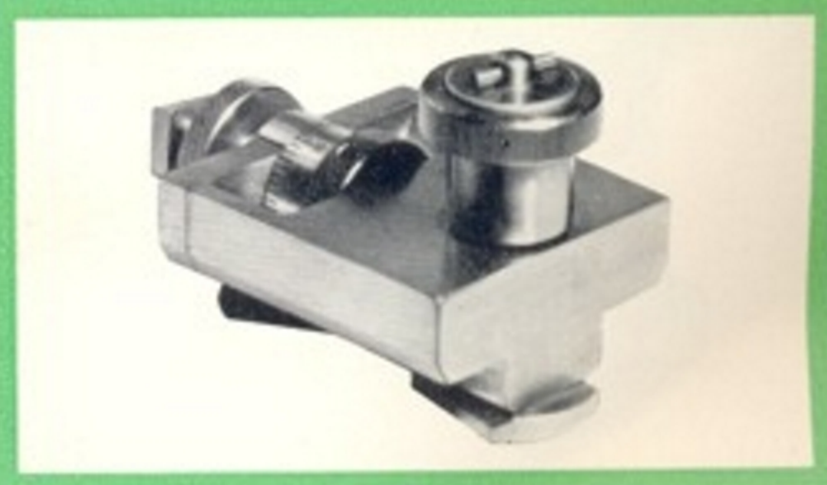

23–023

RESEARCH ACCESSORIES

23–025 **BASE CARRIER.** As used for various light sources. Complete with upright for mounting special lamphouses or customers' own components.

23–026 **LAMPHOUSE.** Has a socket for taking 100 watt opal lamps and is used for providing diffuse illuminations in conjunction with the collimators. Mounted on carrier for centre slide.

Shown in use at right hand end of the bench on page 22.

23–027 **PRECISION LAMPHOUSE.** Takes a 6 volt, 48 watt bulb with a multiple coiled filament of the solid source type. The filament consists of four single helixes, in contact and in electrical parallel, horizontally mounted in the bulb. The area covered by the filaments is 6 mm wide × 5 mm high and they are mounted centrally on the vertical axis of the cap. (For spare bulb see 22–776 below.) It has a corrected condenser with focussing adjustment, iris diaphragm, slots for light filters or neutral screens, and two milled heads at the back of the housing to centre the lamp filament accurately in relation to the condenser and iris diaphragm. Supplied complete with a transformer with dimming control for operation on 115 or 220 volts a.c. Mounted on carrier for centre slide.

22–776 **REPLACEMENT BULB FOR 23–027**

23–029 **MERCURY VAPOUR LAMPHOUSE, 125 watt.** A 125 watt, stabilized, mercury vapour lamp. Monochromatic illumination is readily obtained by the use of suitable filters. The lamp is of the medium pressure type and has a quartz bulb. The length of arc is approximately 20 mm and is therefore suitable for slit illumination. Mounted on carrier for centre slide.

The control gear is simple, the essential components being a 13 μf condenser and a standard 125 watt choke.

23–030 **MERCURY VAPOUR LAMPHOUSE, 250 watt.** A similar source to 23–029 but having a 250 watt Mercury lamp.

The lamp is approximately 140 mm long and 50 mm diameter. It has a tungsten electrode arc 11 mm long and 1·5 mm wide inside a quartz bulb. The outer envelope is glass. The intensity of the arc is 20,000 stilb maximum initial brightness. Mounted on carrier for centre slide.

The control gear consists of a 60 μf power factor condenser and a choke. These are housed in a steel box with inlet and outlet plugs and sockets. The lamp is controlled by a double pole switch and a neon lamp on the front of the housing indicates on/off.

23–034 **PRE-FOCUS PROJECTION LAMP.** A 12 volt 250 watt solid source lamp. The lamp is approximately 32 mm diameter and 135 mm overall length. Mounted on carrier for centre slide.

The control gear is supplied boxed with appropriate plugs and switches. As a current of 21 amps is passed the control uses heavy clamp terminals instead of conventional outlet plugs.

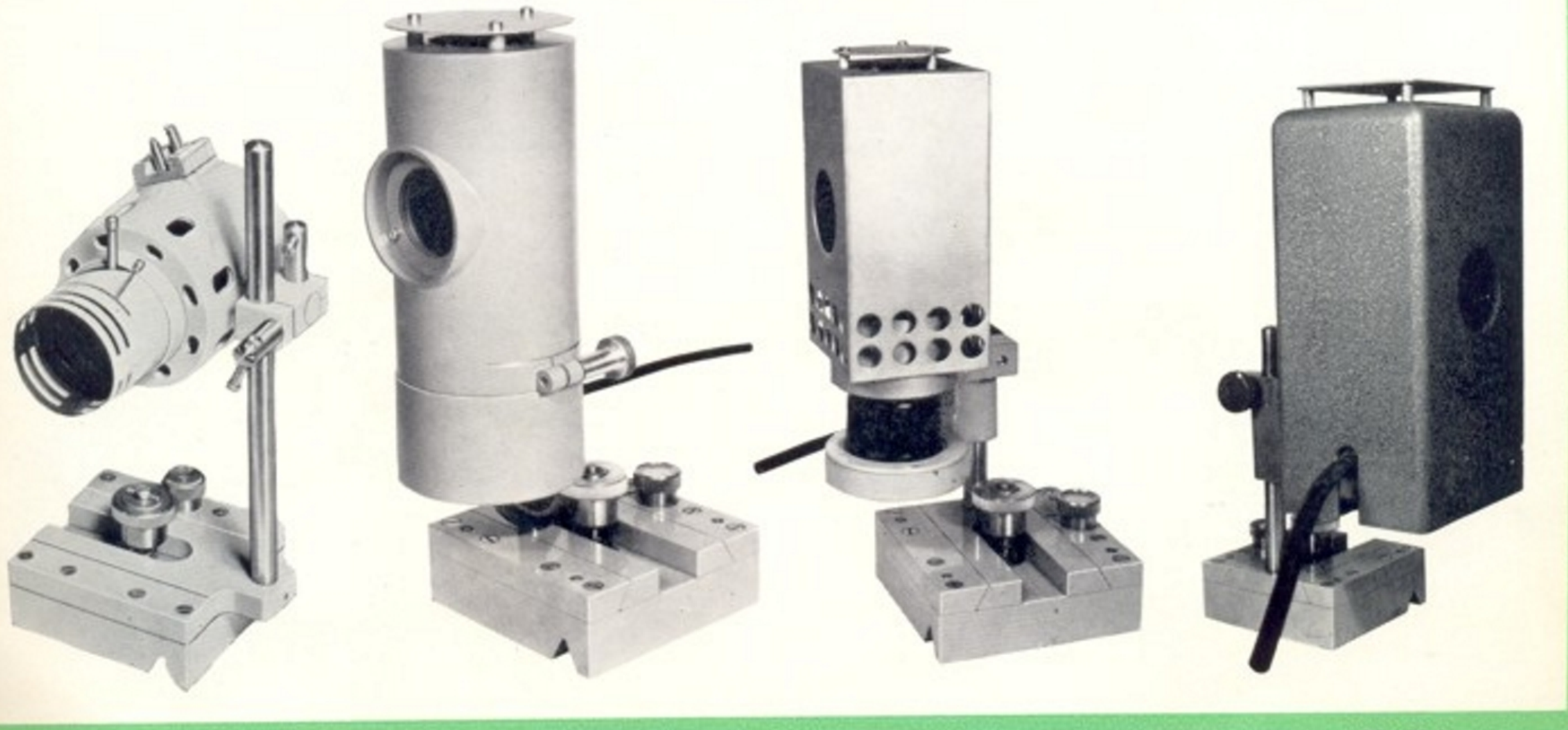

23–027 **23–029** **23–030** **23–034**



23–036





23–040 and 23–041

23–036 **CALIBRATED IRIS DIAPHRAGM.** Aperture range is from 5 mm to 52 mm. Calibrated in intervals of 1 mm. Mounted on a threaded ring for use with 23–015 Concentric Rings Set.

23–038 **CONDENSER.** An achromatic and aplanatic system of 2·19 inch (55 mm) equivalent focal length and 1·3 inch (33 mm) aperture F/1·75. Mounted on a threaded ring for use with 23–015 Concentric Rings Set. Supplied complete with iris diaphragm and filter rack. It has a suitable working clearance for all listed lamp units.

23–040 **COLLIMATOR 15 INCH FOCUS.** Three lens cemented system of good color and spherical correction. Supplied mounted in a threaded collar for use with 23–015 Concentric Rings Set. This collar can be removed (seen on right) so that the collimator can be used in the vee-block 23–041 (as illustrated).

This collimator is designed to allow a parallel axis to be set to any desired reflecting surface. It is also capable of being used as a general collimator.

The collimator is supplied with an ×10 Ramsden eyepiece which focusses onto a plain cross line graticule.

The aperture of the collimator is 1½ inches and the field subtended is 4 degrees. Resolution is of the order of 4 seconds of arc.

23–041 **VEE BLOCK.** For mounting 23–040 Collimator.

23–042 **COLLIMATOR 36 INCH FOCUS.** This large collimator has a three lens air spaced apochromatic system of good colour and spherical correction.

It is supplied in a threaded ring to be mounted in the carrier for centre slide 23–005 (as illustrated below). The collimator is balanced about its mounting point and thus to save bench space can be mounted by overhanging the end of the bench.

A graticule in the focal plane of the objective is divided into equal parts each equal to $\frac{1}{1000}$th of the focal length. The graticule can if desired be readily interchanged with other graticules. The graticule fitting is on the end of a tube which can be adjusted to give settings of the object viewed in the collimator other than at infinity.

Adjustments at 90° are provided at the balance point of the collimator. This enables the whole tube to be swung around the centre of the objective and permits alignment of the collimator axis along the bench or a small angle off this axis in any direction to suit the particular application.

The aperture of the collimator is 3 inch diameter and the field subtended is 4 degrees. Resolution is of the order of 2 seconds of arc.

23–044 **MICROSCOPE.** A standard microscope tube mounted on a threaded ring for use with 23–015 Concentric Rings Set. Has rack and pinion focussing and an adjustable draw tube. Takes all standard eyepieces and objectives and filar micrometer and goniometer eyepieces. Supplied with an ×10 wide field eyepiece with cross line graticule and a 16 mm objective that gives a working distance of ·28 inches (7 mm) and a nominal magnification of ×100. A complete range of microscope eyepieces, objectives and graticules are available on request.

23–046 **TELESCOPE.** The objective consists of a 4 inch (100 mm) focal length achromatic lens. The eyepiece is an ×20 with 13 mm focus. The overall magnifying power of the unit set to infinity is ×7·7.

The eyepiece fitting is standard. The eyepiece has a cross line graticule at its focus and this is useful for establishing the zero of diopter scales.

The telescope can focus down to 1 metre and both the objective and cross line are set true to the outside diameter of the unit. Mounted on a threaded ring for use with 23–015 Concentric Rings Set.

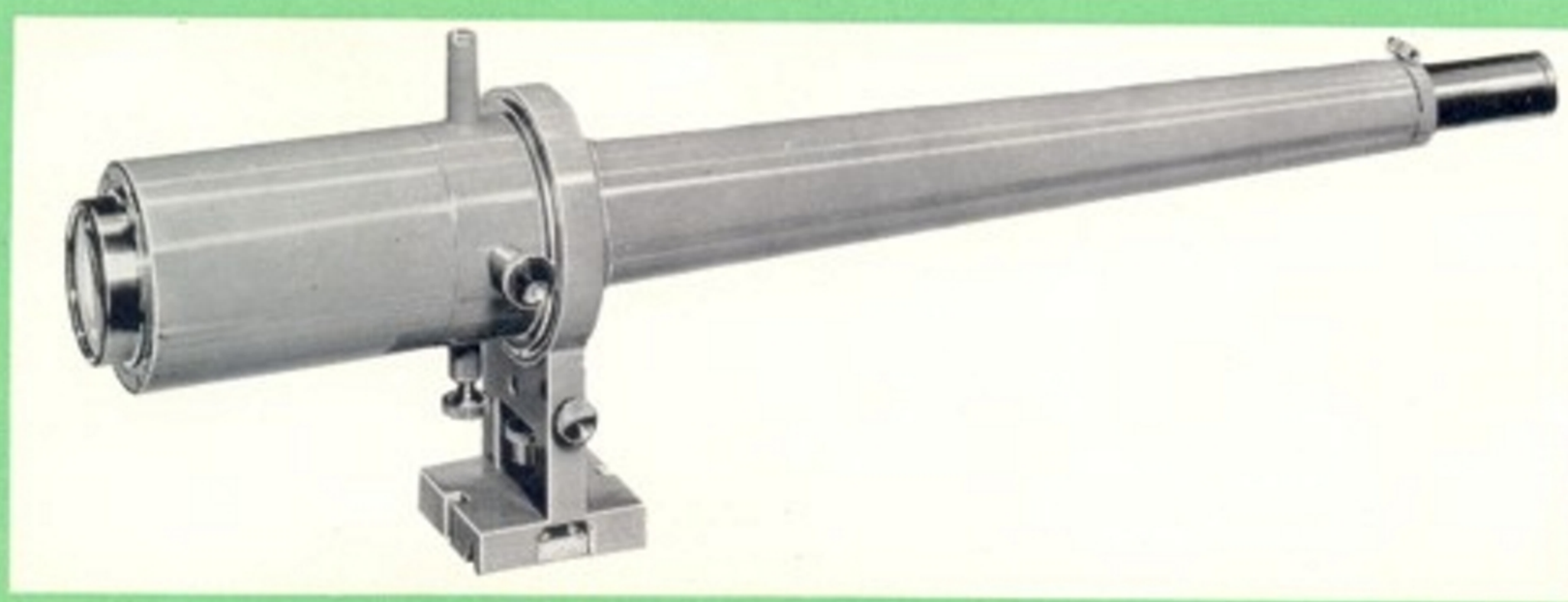

23–042



23–044

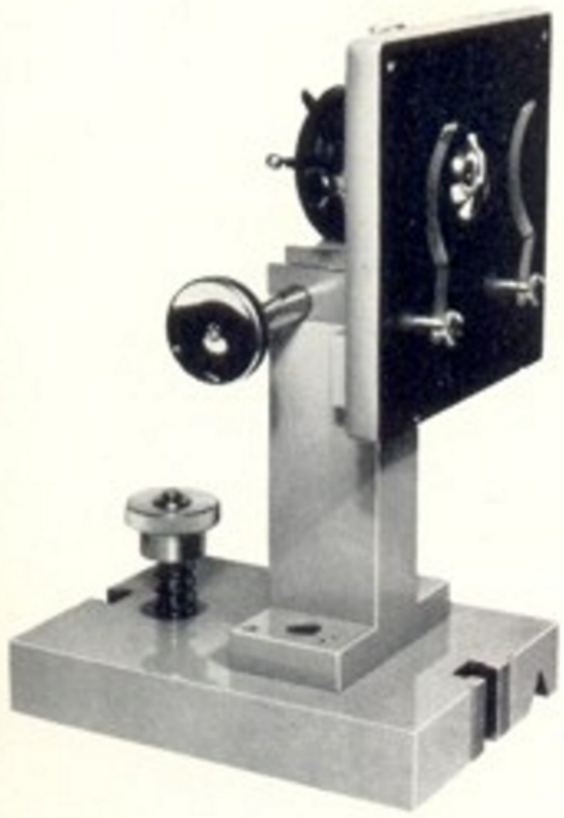

23–048

23–048 MICROSCOPE STAGE. Consists of a plain stage 4½ inches square. The stage has in it a 1 inch aperture and a fixing hole to which a standard attachable mechanical stage may be fitted if desired. The normal object surface of the stage faces the zero end of the optical bench.

On the other side of the stage is a substage fitting which will take any substage apparatus and centre and focus it on to the true optical axis and object plane on the stage.

Mounted on a base for the centre slide.

23–050 NODAL SLIDE. For testing photographic lenses and for establishing the nodal points of a lens. A standard threaded carrier such as 23–005 is mounted on a base for the bench centre slide. The base has a positional vernier. The standard threaded carrier is mounted on a rack and pinion driven slide that has a scale and vernier and a travel of 140 mm. A pin is also mounted on this slide. This slide is mounted so that it can be rotated about a vertical axis. The rotation is measured by vernier on a circular scale graduated 180–0–180 in numbered degrees. The slide can be locked at any point of its rotations. Shown in use on the left end of the bench illustrated on page 22.

23–055 PRECISION ALIGNMENT TABLE. Precision alignments can be made with great speed and accuracy with this table. The table is mounted on a carrier that fits the bench side slides. The table has three types of independent motion: (a) in two directions; the transverse travel is 150 mm; the vertical travel is 80 mm; both motions read by scale and vernier to 0·01 mm; (b) through 360° rotation about a vertical axis read against a scale calibrated in degrees and (c) as a super-levelling table, the tilt of which is actuated by a micrometer screw calibrated in divisions of 20 seconds of arc. The precision machined top surface is 25×12 cm (10×5 inches) and can be used with its length along the bench or rotated so that the length is across the bench. A large clamp is supplied that extends the full length of the table and has quick release clamping nuts. Vee-blocks with individual clamps are also supplied. The top surface of the table has a number of locating slots to take clamps etc. (Note that this table can not be used with the 22–990 Research Bench since the bench does not have side slides.)

Shown in use in the centre of the bench on page 22.

23–056 PRECISION ALIGNMENT TABLE. As 23–055 but mounted on a base for centre slide, but with vertical motion limited to approximately 60 mm.

23–060 STORAGE CABINET. This cabinet is of solid mahogany with full glass doors. It is 5 feet tall and has 4 drawers and various compartments fitted to take the bench accessories.



23–050



23–060

BICONCAVE and BICONVEX LENSES

OPTICALLY GROUND GLASS LENSES WITH GROUND EDGES. THE REFRACTIVE INDEX IS ABOUT 1·52

BICONCAVE

FOCAL LENGTH	DIAMETER		
	25 mm	51 mm	63 mm
5 cm	23–760	23–780	23–800
10 cm	23–762	23–782	23–802
15 cm	23–764	23–784	23–804
20 cm	23–766	23–786	23–806
25 cm	23–768	23–788	23–808
30 cm	23–770	23–790	23–810
50 cm	23–772	23–792	23–812
100 cm	23–774	23–794	23–814

BICONVEX

5 cm	23–860	23–890	23–920
10 cm	23–862	23–892	23–922
15 cm	23–864	23–894	23–924
20 cm	23–866	23–896	23–926
25 cm	23–868	23–898	23–928
30 cm	23–870	23–900	23–930
50 cm	23–872	23–902	23–932
100 cm	23–874	23–904	23–934

CONCAVE and CONVEX MIRRORS

ALL MIRRORS ARE SPHERICALLY WORKED, SURFACE ALUMINIZED AND UNMOUNTED

CONCAVE MIRRORS

FOCAL LENGTH	DIAMETER 50 mm	75 mm	100 mm
7·5 cm	23–520	23–530	23–540
10 cm	23–522	23–532	23–542
15 cm	23–524	23–534	23–544
20 cm	23–526	23–536	23–546
30 cm	23–528	23–538	23–548

CONVEX MIRRORS

7·5 cm	23–560	23–570	23–580
10 cm	23–562	23–572	23–582
15 cm	23–564	23–574	23–584
20 cm	23–566	23–576	23–586
30 cm	23–568	23–578	23–588

SCHLIEREN MIRRORS

These Schlieren mirrors are made by Optical Works Limited in London. They are worked to the highest practical degree of perfection.

The mirrors are surface aluminized and 4 inches diameter. They are supplied in five forms, one plane and four spherical.

The plane mirror quality is checked by proof plane. The surface is true to $\frac{1}{8}$th wavelength of mercury light.

The spherical mirrors have their quality checked during manufacture by the Foucault knife-edge test. This results in a true sphericity to within $\frac{1}{10}$th wavelength of mercury light.

The focal length of these spherical mirrors is held to within 2% of the stated value.

The mirrors are supplied in heavy metal mounts. The mounts pivot on both their vertical and horizontal axis. There is a fine adjustment screw and locking screw for both the vertical and horizontal motion.

All mounts are supported by standard optical bench stems and may therefore be used in any carrier taking 13·7 mm stems.

A detachable metal cover protects the mirrors when not in use.

CATALOG No.	PRICE	DIAMETER INCHES	TYPE	F NUMBER	FOCAL LENGTH INCHES	RADIUS INCHES
23–600		**4**	**Plane**	—	—	—
23–601	*SEE*	**4**	**Spherical**	**F18**	**72**	**144**
23–602	*LIST*	**4**	**Spherical**	**F12**	**48**	**96**
23–603		**4**	**Spherical**	**F10**	**40·8**	**81·6**
23–604		**4**	**Spherical**	**F 9**	**36·8**	**73·6**

Supplied to special order at same prices for table mounting with tripod base in place of optical bench fitting. Note that 8, 12, 18 and 24 inch Schlieren Mirrors are also available. Quotations will be supplied on request.

FILTERS

26–300 COLOUR FILTER SET. Made from the famous Chance glass. Optically polished and between 2·5 and 3·0 mm thick. The tint is even and will not fade. All filters are 2 inches square for such holders as the 22–865 shown on page 16. A complete set of transmittance curves are provided over the range of 0·3 to 4·5 microns. The set of 13 filters comes in a leatherette-covered case.

Reference	Type	Chance No.		Transmittance (Visible)
1	Ruby	O.R.	1	5·00%
2	Red	O.R.	2	21·00%
3	Deep Orange	O.Y.	1	42·00%
4	Light Orange	O.Y.	2	60·00%
5	Green	O.Gr.	1	22·00%
6	Blue-Green	O.B.	2	22·00%
7	Blue	O.B.	10	0·09%
8	Purple	O.V.	1	0·02%
9	Daylight	O.B.	8	24·00%
10	Dark Neutral	O.N.	10	7·00%
11	Light Neutral	O.N.	11A	20·00%
12	Dark Orthochromatic	O.Y.	12	60·00%
13	Light Orthochromatic	O.Y.	13	77·00%

INTERFERENCE FILTERS. Precision narrowband dielectric filters in the UV from 2100 to 3400 and 3900 to 4000 A. In the visible from 4000 to 8000 A. and infrared from 0·8 to 1·6 microns. Details on request.

GRATICULES

GRATICULES, LTD. (of London). In addition to their wide range of standard eyepiece graticules and N.P.L. Certified stage micrometers, special pieces can now be made to your own precision specification and design through Graticules' exclusive MaXta process. Inquiries are invited.

SPECTRAL SOURCES

26–220 TO 26–242 OSRAM SPECTRAL LAMPS

This justly famous series of gas discharge lamps can be used in a wide variety of applications requiring monochromatic radiation. Detailed specifications are given in the accompanying table.

The glass or quartz tube containing the gas vapour or metal whose spectrum is desired is sealed in a bulb that provides thermal insulation and mechanical protection. The material of the envelope depends on the particular spectral region; it is either ordinary glass or a special glass which transmits light down to a wavelength of 2,800 A. Lamp 26–229 has a special window in the outer envelope which transmits radiation down to 2,300 A. All lamps are $6\frac{1}{4}$ inches high overall, with an outside diameter of $1\frac{1}{4}$ inches, and they emit their maximum intensity of radiation from the same space within the tube.

The lamps take the special socket and conical base 26–250. The support rod is 1 cm in diameter and may be removed from the conical base so that the socket may be used on optical benches or with special supports. The lamp must be used at all times with the base down.

These lamps have a starting potential of 220 volts a.c. and must be used with a series resistance or choke coil such as 26–255. The lamps must not be connected direct to 220 volts a.c. lines.

The light intensity of these lamps is very constant. With the exception of the neon and helium lamps, it takes several minutes before full intensity is reached.

26–250 ADJUSTABLE SOCKET WITH BASE AND LIGHTSHIELD FOR OSRAM SPECTRAL LAMPS

This socket is needed to operate the Osram Spectral Lamps. It has 1 cm diameter support rod and leads with knife plugs to connect to 26–255. It comes complete with a heavy conical base and a black metal lightshield. The socket is adjustable in the base for height and can be removed from the base for use on optical benches or in other holders. The lamp must always be used with the base down. (Illustrated with Osram Spectral Lamp.)



Osram Spectral Lamp on 26–250 Socket and Base

Specifications for Osram Spectral Lamps

Catalogue Number		Symbol	Kind	Material Burner	Material Envelope	Operating Potential Volts	Operating Current Amperes	Power Dissipated in Lamp Watts	Light Intensity Candela	Emitting Height mm	Surface Width mm	Surface Brightness Stilb
26–220		Cd	Cadmium	Quartz	Glass*	12	1.5	18	3.0	20	8	1.0
26–222		Cs	Caesium	Glass	Glass	7	1.5	10	0.7	20	10	0.1
26–224		He	Helium	Glass	Glass	60	1.3	65	3.5	15	10	2.3
26–226		Hg	Mercury	Quartz	Glass*	50	1.2	50	110	20	3	150
26–228		Hg/Cd	Mercury & Cadmium	Quartz	Glass*	30	1.0	30	15	20	3	5.0
26–229		Hgs	Mercury	Quartz	Glass†	55	1.1	50	50	20	2	120
26–230		K	Potassium	Glass	Glass	10	1.5	14	0.15	20	10	0.02
26–232		Na	Sodium	Glass	Glass	20	1.3	22	30	15	10	12
26–236		Ne	Neon	Glass	Glass	30	1.5	40	3.5	20	10	0.8
26–238		Rb	Rubidium	Glass	Glass	10	1.5	13	0.4	20	10	0.04
26–240		Tl	Thallium	Quartz	Glass*	14	1.0	13	0.8	9	3	3.0
26–242		Zn	Zinc	Quartz	Glass*	14	1.5	20	1.0	20	8	0.1

*Transmits to 2800 angstroms.

†This lamp has a window in the outer envelope to extend the range in the ultraviolet to 2300 angstroms and has a special burner of high constancy of light emission.



26–255 UNIVERSAL CHOKE COIL FOR OSRAM SPECTRAL LAMPS

This choke coil is designed as a ballast for use with the Osram Spectral Lamps. The input voltage must be 220 volts a.c. There are 7 different connections provided marked for the particular lamp being used.



26–260 STEP-UP TRANSFORMER

Can be used with 26–255. Primary voltage 110 volts a.c. Secondary voltage 220 volts a.c.

SPECTRAL SOURCES

26–270 TO 26–290 PHILIPS SPECTRAL LAMPS

This new series of Philips spectral lamps considerably extends the range of readily available monochromatic sources. It supplements the well known range of Osram Spectral Lamps. Detailed specifications are given in the accompanying table.

The Philips lamps all have the same electrical current characteristics and are the same size. They therefore provide ideal immediately interchangeable sources.

The lamps consist of a small discharge tube surrounded by a cylindrical outer bulb. The discharge tube contains a gas, a metallic vapour or a mixture of both and the electrodes provide for a very high current density. This results in a source capable of emitting intense energy in one single line or in a few lines.

For use in the visible region of the spectrum from 4,000–7,000 A. lamps with an outer bulb of glass are provided. For ultra-violet work in the region 2,100–4,000 A. the bulb and discharge tube are both of quartz.

All lamps are $6\frac{3}{4}$ inches high overall with an outside diameter of $1\frac{3}{16}$ inches. They all emit their radiation from the same area, the centre of which is 110 mm from the tip of the base cap. The lamps have an E.S. base and may be fitted into any standard screw fitting socket. They should not, however, under any circumstances be connected direct to the mains supply and they must always be used with the base down. The lamps have an operating current of 0·9 amps and require a high striking voltage. Such a voltage is supplied by the 26–295/6 140 watt Auto-leak Transformers which are fed directly from the mains supply and deliver an open circuit voltage of 470 volts.

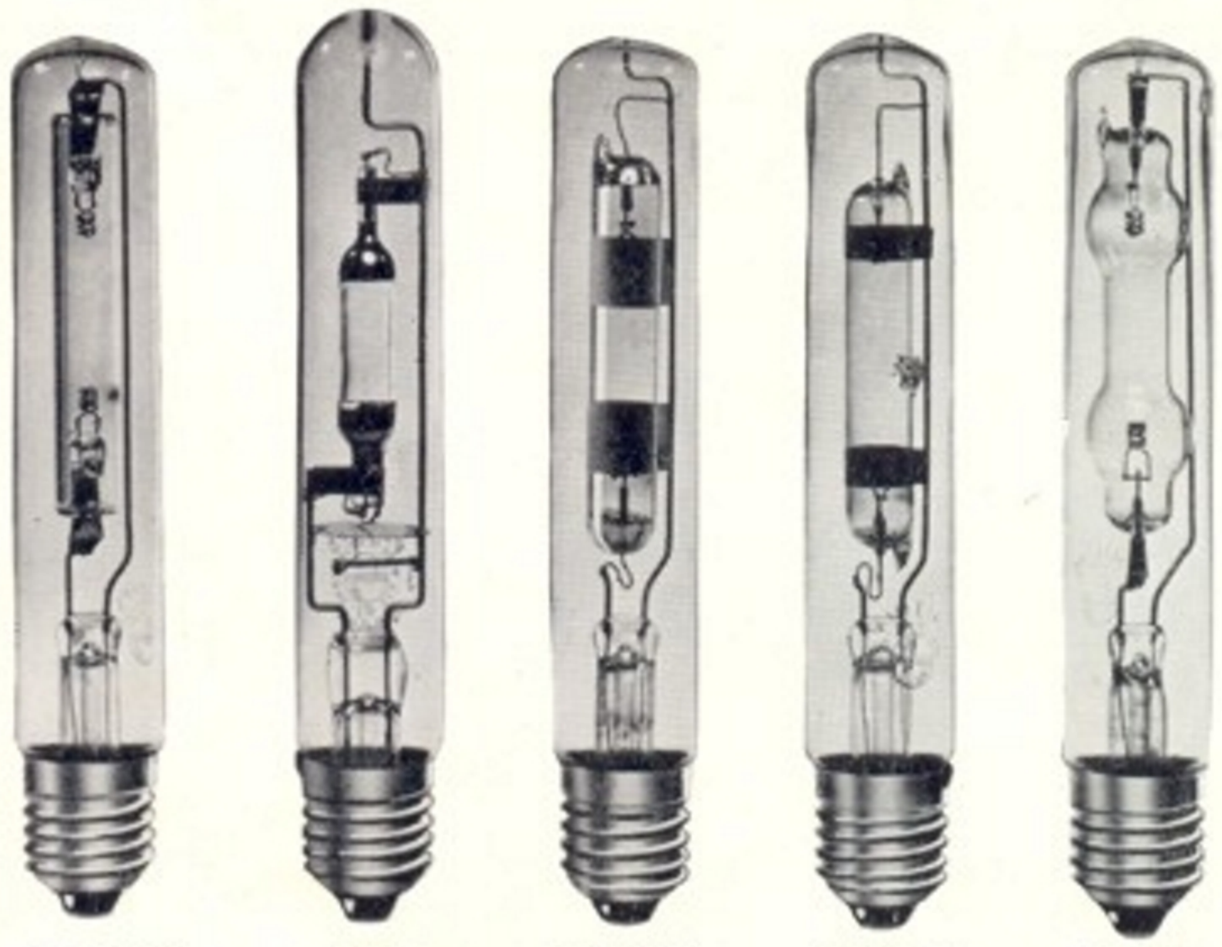

MERCURY (Low Pressure) *ZINC* *CADMIUM* *KRYPTON* *HELIUM*

Specifications for Philips Spectral Lamps

Catalogue Number	Price	Symbol	Kind	Material: Burner	Material: Envelope	Operating Current Amperes	Wattage	Arc Length mm
26–270	£4. 4. 0	Hg	Mercury (low pressure)	Quartz	Glass	0·9	15	40
26–271	£10. 18. 6	Hg	Mercury (high pressure)	Quartz	Glass	0·9	90	30
26–272	£10. 18. 6	Cd	Cadmium	Quartz	Glass	0·9	25	30
26–273	£10. 18. 6	Zn	Zinc	Quartz	Glass	0·9	25	30
26–274	£10. 18. 6	Hg, Cd, Zn	Mercury, Cadmium & Zinc	Quartz	Glass	0·9	90	30
26–275	£4. 4. 0	He	Helium	Glass	Glass	0·9	45	32
26–276	£4. 4. 0	Ne	Neon	Glass	Glass	0·9	25	40
26–277	£4. 4. 0	A	Argon	Glass	Glass	0·9	15	40
26–278	£4. 4. 0	Kr	Krypton	Glass	Glass	0·9	15	40
26–279	£4. 4. 0	Xe	Xenon	Glass	Glass	0·9	10	40
26–280	£4. 4. 0	Na	Sodium	Glass	Glass	0·9	15	40
26–281	£4. 4. 0	Rb	Rubidium	Glass	Glass	0·9	15	40
26–282	£4. 4. 0	Cs	Caesium	Glass	Glass	0·9	10	40
26–283	£4. 4. 0	K	Potassium	Glass	Glass	0·9	10	40
26–285	£18. 0. 0	Hg	Mercury (low pressure)	Quartz	Quartz	0·9	15	40
26–286	£18. 0. 0	Hg	Mercury (high pressure)	Quartz	Quartz	0·9	90	30
26–287	£18. 0. 0	Cd	Cadmium	Quartz	Quartz	0·9	25	30
26–288	£18. 0. 0	Zn	Zinc	Quartz	Quartz	0·9	25	30
26–289	£18. 0. 0	Hg, Cd & Zn	Mercury, Cadmium & Zinc	Quartz	Quartz	0·9	90	30
26–290	£18. 0. 0	In	Indium	Quartz	Quartz	0·9	25	25

26–295 CONTROL FOR 26–270 TO 26–290 SPECTRAL LAMPS

The ballast control is an auto-leak transformer of the low-power factor type. It has a rating of 140 watts and is operated direct from a 115 volt 60 cycle supply. An open circuit voltage of 470 volts is generated to provide suitable striking potential for the spectral lamps.

The unit is $6\frac{7}{8}$L × $4\frac{1}{8}$W × $5\frac{1}{2}$H inches and weighs $17\frac{3}{4}$ lbs.

Price: £14. 0. 0

26–296 CONTROL. As for 26–295 but 220 volt, 50 cycle supply ... ... PRICE £10. 5. 0

26–297 STAND FOR PHILIPS LAMPS. ... ... PRICE £2. 17. 6

For optimum performance the manufacturer recommends that the Spectral Lamps be operated from the 26–295/6 Transformers. They will, however, be prepared to advise on the suitability or otherwise of control equipment which may already be available in the customer's laboratory.



2nd Edition, July 1963

HUGH WOOD and Son Limited

23 Leman Street, London, E.1, England

Telephone: ROYal 0392 Cable Address: Hughson, London E.1

EC/57

Printed in England