Darkground condensers

D 1.20 D 0.80

Leitz WETZLAR

Instructions

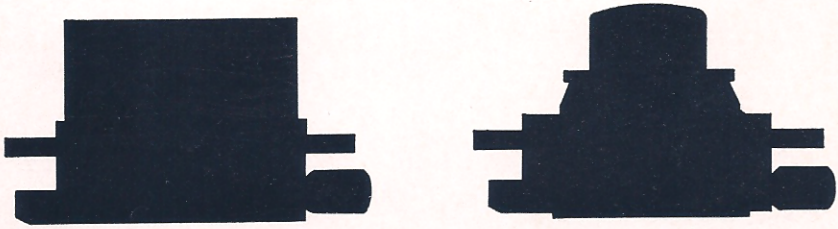

Scanned by H.Lynk for free distribution

513–31 b/Engl.

D 1.20 Darkground condenser

The D 1.20 immersion darkground condenser in centring mount is designed for darkground investigations mainly with oil immersion objectives at high magnifications. The Oel 100/1.30 achromatic oil immersion objective and, for best image quality, the Fl Oel 95/1.32 or the special versions for darkground IRIS Oel 100/1.30–1.10 and Iris Fl Oel 95/1.32–1.10 are particularly suitable.

The special versions can be used without additional diaphragm; but other immersion objectives require a funnel stop so that the objective aperture, too large for the D 1.20 darkground condenser, can be reduced below its limiting aperture (here 1.20); otherwise part of the illuminating rays would enter the objective and the resultant darkground image would not be perfect.

Special objectives with built-in iris diaphram for brightfield and darkground 170/0.17/37mm

Type of objective	Engraving: Magnification/Aperture	Free working distance mm	Focal length mm	Cover-glass correction	Type of eyepiece
Achromat for D 0.80 condenser	Iris 63 0.85–0.20	0.24	2.9	D !	P
Achromatic oil immersion objective for D 1.20 condenser	Iris Oel 100 1.30–1.10	0.10	1.9	D	P
Fluorite oil immersion objective for D 1.20 condenser	Iris Fl Oel 95 1.32–1.10	0.12	2.0	D	P

D with coverglass D = 0.17mm (coverglass thickness should be observed accurately to within ± 0.05mm)
P = PERIPLAN® eyepiece

D ! coverglass thickness 0.17mm should be observed accurately to within ± 0.01mm: where the objective has a correction mount, the actual coverglass thickness should be set at this accuracy.

Funnel stops for medium- and high-power objectives for the reduction of the objective aperture

a) for use with the D 0.80 dry darkground condenser
for 63/0.85 objective
for Fl 40/0.85 objective
for Fl Oel 54/0.95 objective
for Apo 40/0.95 objective
for Apo 63/0.95 objective

b) for use with the D 1.20 immersion darkground condenser
for Oel 100/1.30 objective
for Apo Oel 90/1.32 objective
for Fl Oel 95/1.32 objective

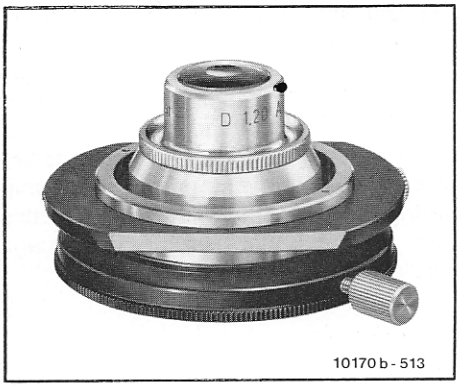

Fig. 1
D 1.20 immersion darkground condenser

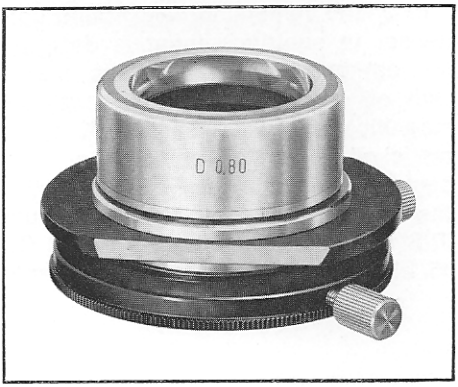

Fig. 2
D 0.80 dry darkground condenser

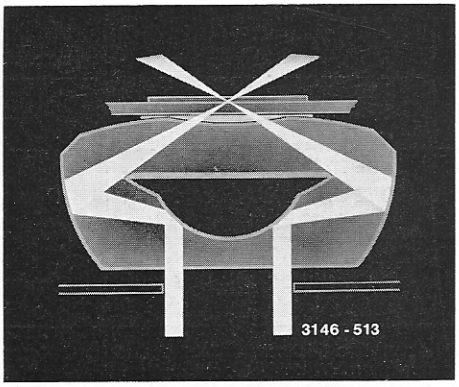

Fig. 3
Optical path in the D 1.20 darkground condenser

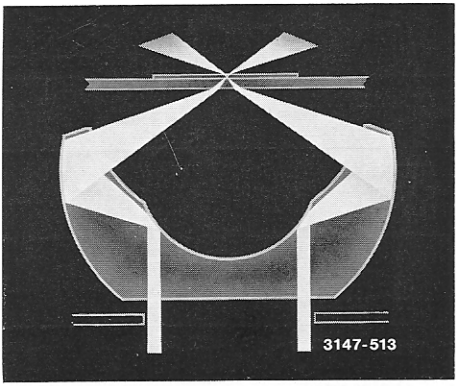

Fig. 4
Optical path in the D 0.80 darkground condenser

To obtain a perfect darkground preparation, the following important points must be observed:

1) Condenser, object slide and coverglass must be free from scratches, thoroughly cleaned, and free from dust.

2) The object slide should be between 0.9 and 1.1mm thick. If it is too thick, the rays will be focused inside it, and it will be impossible to obtain the point of intense light essential to a perfect darkground.

3) The thickness of the coverglass should be as near 0.17mm (0.12–0.22) as possible; the objectives specified above have been computed for this thickness.

4) The specimen should not be too thick, as this reduces the contrast in darkground. Excessive density or the presence of too many diffracting particles has the same effect and may in certain conditions render the picture useless. The substance to be investigated may therefore have to be diluted when it is prepared for darkground examination. To protect the liquid against evaporation it is advisable to seal the edges of the coverglass with wax or paraffin.

5) The coverglass must be plane on the object slide, i.e. the specimen must not be wedge-shaped; otherwise unilateral deformations of the diffraction phenomena may occur.

6) Specimens to be examined in darkground at condenser apertures about 1.0 must be embedded in a medium whose refractive index is slightly higher than the lower limiting aperture of the condenser. This makes water (n = 1.333) a suitable embedding medium for the D 1.20 condenser.

The perfect adjustment of darkground illumination depends on accurate centration of the light source which should, if necessary, be tested with the aid of the brightfield condenser (after removal of the eyepiece from the microscope tube, the rear lens of the objective must appear fully illuminated). Before the darkground condenser is inserted, its centring mount should be set at approximately its middle position (both screws may have to be adjusted). Only now should the darkground condenser be pushed into its holder on the microscope; it should be pushed fully home, but not yet raised with the rack-and-pinion movement.

1) An adequate drop of immersion oil is now placed on the top surface of the D 1.20 immersion darkground condenser,

2) the darkground specimen is placed in position and focused with the 10/0.25 objective (if the brightness is not sufficient, lower the condenser). At first a brightfield image poor in contrast will be seen.

3) The condenser is now raised with the rack-and-pinion movement; this should be checked by observation from the front until the droplet of oil makes contact with the underside of the object slide (brief light flash in the object slide).

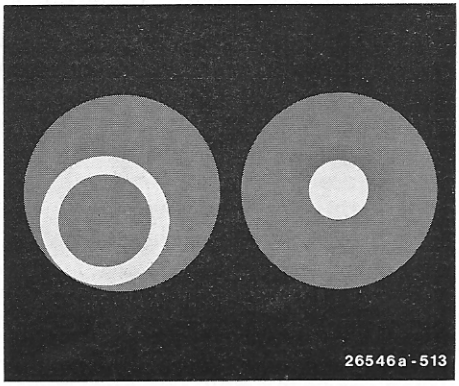

Fig. 5
On the left the originally seen light ring, not yet centred. On the right the centred light point: the darkground condenser is correctly set. Light ring and light point do not appear as sharp in actual observation as shown here in the interest of clarity.

4) During continued observation in the tube and with the specimen in sharp focus the condenser is moved still closer to the object slide until the light ring first seen contracts to the smallest possible light point. This must now be moved to the centre of the field of view by means of the 2 centring screws of the

darkground condenser (see Fig. 5). Accuracy of centring can be further improved if the original light ring is made concentric with the edge of the field of view.

5) Only now is an objective of higher primary magnification on the revolving nosepiece turned into the beam. When immersion objectives are used please bear the instructions on p. 1 in mind. In combination with the D 1.20 immersion darkground condenser dry systems of large aperture, such as Apo 40/0.95, too, produce perfect darkground images.

6) When an oil immersion objective is used an adequate drop of immersion oil is placed on the top of the coverglass. Repeated dabbing should be avoided both here as on the immersion condenser, because this may produce air bubbles, which have a very disturbing effect on the quality of darkground. The stage is now raised until the front lens just makes contact with the drop of oil*. When objectives with built-in iris diaphragm are used maximum brightness of the field of view is now set with the fine adjustment; at this stage the structure must become faintly visible; the diaphragm is now closed until perfect darkground is produced. The object. structures appear fringed with light (check focusing with the fine adjustment). When a funnel stop is used, a darkground image will immediately appear, and is focused as usual with the fine adjustment.

For darkground examinations with medium-power dry objectives, especially with serial examinations, the D 0.80 dry darkground condenser, which is simpler to use, is recommended. The individual points concerning the setting of the darkground image logically apply also to this condenser; obviously, immersion oil is used neither between the condenser and the object slide nor between the coverglass and the objectives. In dry objectives of apertures exceeding about 0.70, same as with immersion objectives, a funnel stop must be inserted; unless the 63/0.85 objective with iris diaphragm is used.



18050c-519

Fig. 6
Funnel stop for the Oel 100/1.30 objective for use with the D 1.20 darkground condenser.

In microscopes with built-in illuminator and swing-out lens in the lower part of the stand this lens remains in the beam when darkground condensers are used.

A suitable test specimen for the setting of darkground illumination is a scraping of buccal spirilla, which is easy to obtain.

* In the LABORLUX® II the objective is lowered.

** An insert stop is available for our D 0.80 darkground condenser; it does not change the lower limiting condenser aperture of N.A. = 0.80. Its sole function is the elimination of stray light, and its constant use with this condenser is therefore recommended.



® = Registered Trademark

Design subject to alteration without notice.

ERNST LEITZ GMBH D-6330 WETZLAR GERMANY

Subsidiary:
Ernst Leitz (Canada) Ltd., Midland, Ontario

List **513–31 b/Engl.**

Printed in Germany
VII/72/AX/L