Dark-field Zoom Stereo Microscope

INSTRUCTION MANUAL

Model JM

OLYMPUS

TABLE OF CONTENTS

Page

Ⅰ. Standard Set 1

Ⅱ. Specifications 1

Ⅲ. Nomenclatures of Main Components 2

Ⅳ. Optical System 3

Ⅴ. Structure 4

Ⅵ. Assembly 6

Ⅶ. Operation 7

Ⅷ. Optical Characteristics 9

Ⅰ. STANDARD SET

Microscope (Body and Binocular Head)	1	set
Stage (Inclined. Bright/Dark Field Illuminator, Power Source and Arm)	1	set
Eyepieces (G10X and G20X)	1	pair each
Specimen Holder	1	set
Inclined Illuminator (LSG-Ⅱ)	1	set
Stage Glass (Smoked)	1	pc.
Eyepiece Caps (Large)	2	pcs.
Eye-shades (for G eyepieces)	2	pcs.
Spare Light Bulbs 20W	2	pcs.
6V 12W	2	pcs.
Case	1	set
Plastic Cover	1	pc.
Inspection Certificate	1	copy
Instruction Book	1	copy

Ⅱ. SPECIFICATIONS

1. Zooming Mechanism : Zoom Ratio 5.7 (Variations 0.7X～4X)
2. Total Magnifications : With G10X Eyepiece : 7X～40X
   With G20X Eyepiece : 14X～80X
3. Inclined Binocular Head :
   Inclination : 45°
   Angle of Visual Axes : 12° (convergent)
4. Range of Interpupillary Distance Adiustment :
   With G10X : 53mm～79mm (exit-pupils)
   With G20X : 49.5mm～75.5mm (exit-pupils)
5. Eyepiece Tube Movement : 360° (by head rotation)
6. Eyepieces :

Magnification	Field Number	Remarks
G10X	22	Wide-Field (Eyepieces)
G20X	12.2	

7. Working Distance : 88mm
8. Body Movement (Vertical) : 55mm
9. Bright/Dark Field Illumination Device : Iris Diaphragm, Bright/Dark Field Selector Switch
   (100V, 110V, 120V, 220V, 240V, Wattage : 20W)
10. Inclined Illuminator : Swivel-joint Arm, and focusing mechanism.
    May be dismantled as reduired.
    6V 12W (Model LSG-Ⅱ)
11. Power Source : Main Switch, and Selector Switch for 3 different illuminations
    (transmitted light, inclined light and transmitted+inclined light)
    Built-in low-voltage transformer for the inclined illumination.
12. Dimensions : 190mm w X 310mm d X 410mm h
13. Net Weight : 8.4kg

Ⅲ. NOMENCLATURES OF MAIN COMPONENTS

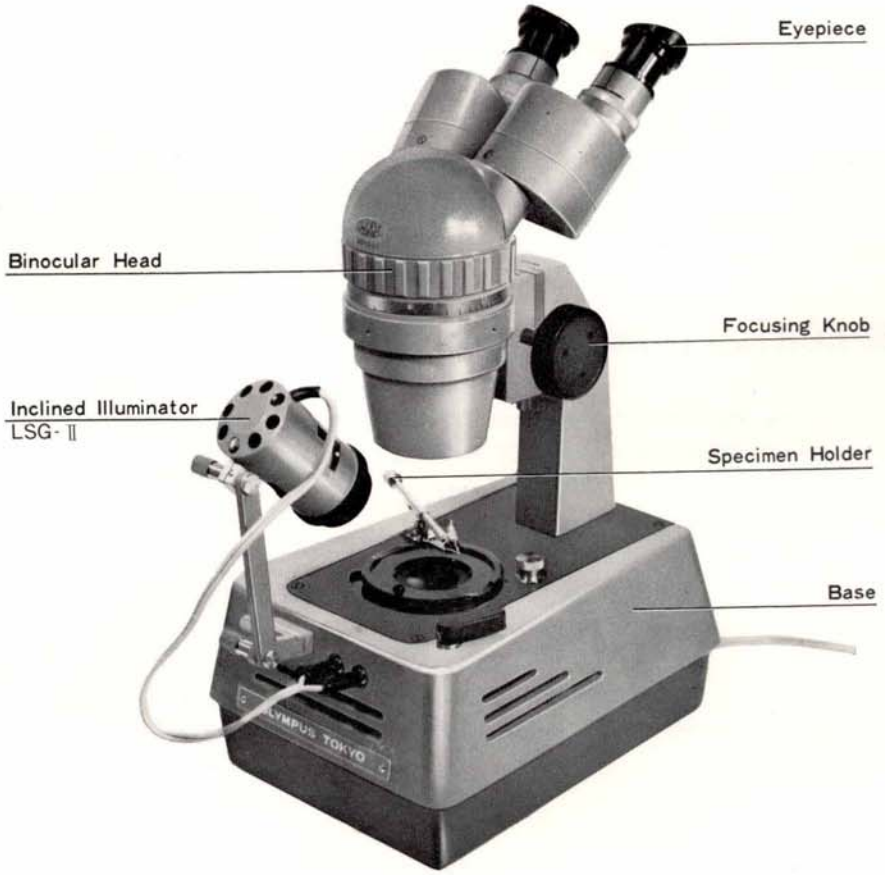

Ⅳ. OPTICAL SYSTEM

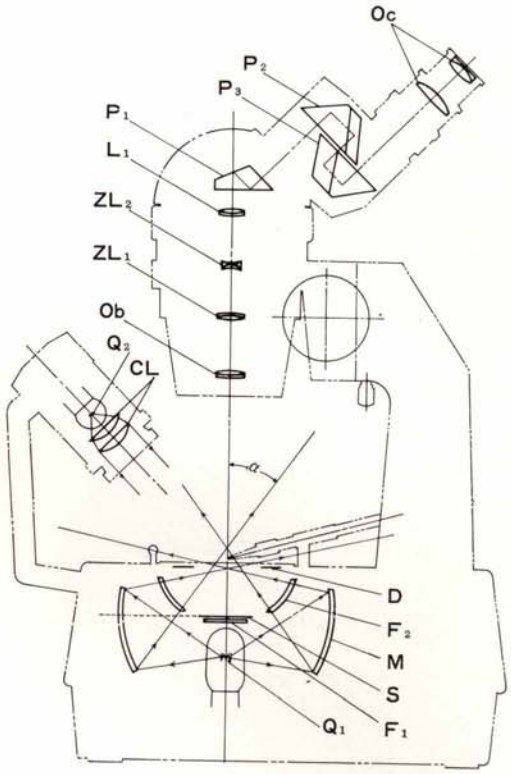

1. For Observation

The beam from the specimen enters into the optical path for observation at an angle of 12°, where it is turned into a pair of beams. This pair of beams will further proceed through the objective "Ob," the zooming variatioh system "ZL_1 and ZL_2" and the fixed lens "L_1", and reach the Prism "P_1" where they again assume 45° inclination, then enter into the porro-prisms "P_2 and P_3" and finally reach the eyepieces "Oc", Continuous zooming variation is performed by movement of the ZL lenses.

2. Illuminating System

Light emitted from the light source "Q_1" proceeds in two directions, one to illuminate the specimen vertically through the frosted plate "F_1" and the other to be reflected as indicated by arrows on the large reflecting mirror "M" which surrounds the light source. The light reflected on mirror "M" then proceeds through the bowl-like frosted plate "F_2" to illuminate the specimen from the border. When the shutter "S" is closed, as shown, the vertical illumination is shielded off, leaving the border illumination alone-i. e. the dark-field illumination. Further, when the iris diaphragm "D" is stopped down, dark-field effect is increased, because the beams with a small angle α against the light axis will be shielded. Light emitted from the inclined illuminator light source "Q_2" proceeds through the condenser lens "CL" to illuminate the specimen from an inclined direction.

V. STRUCTURE

A. Microscope

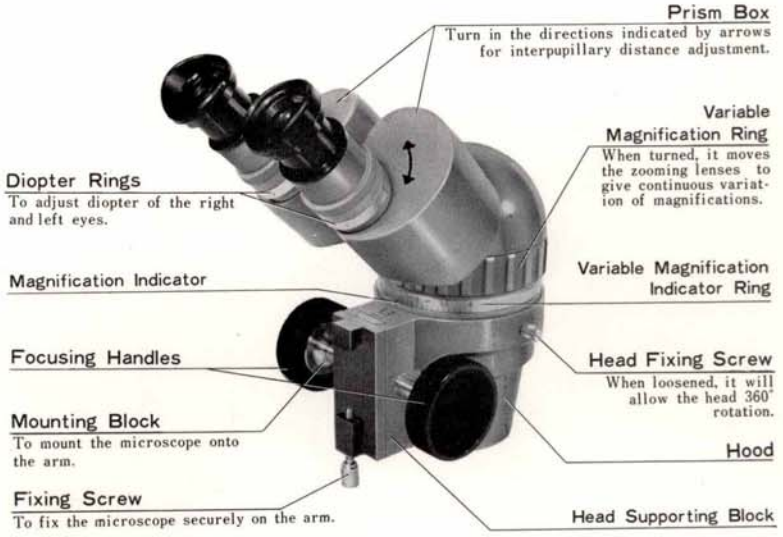

B. Base

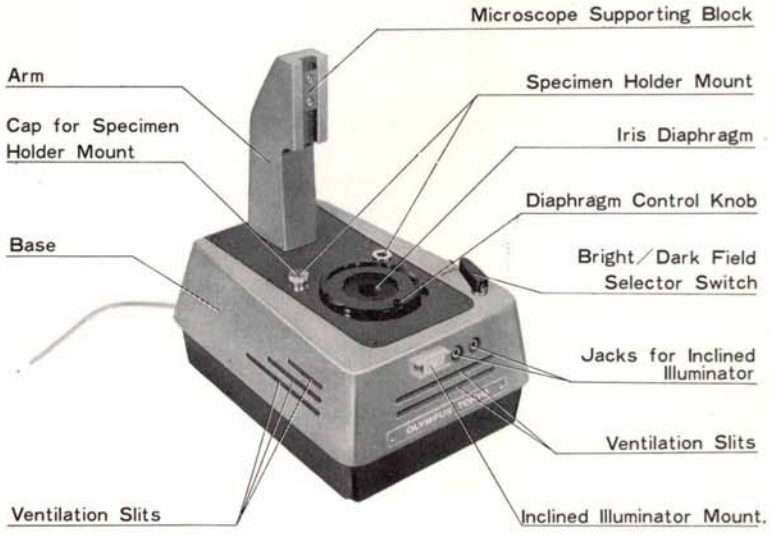

C. Specimen Holder



D. Power Source

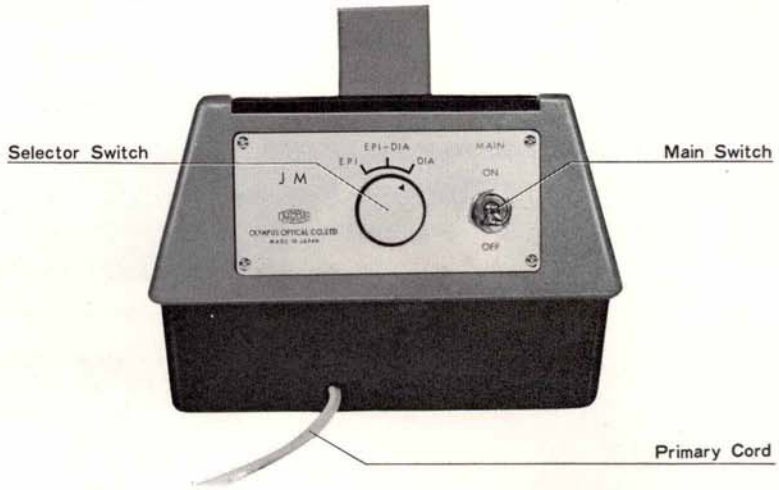

E. Inclined Illuminator (LSG-Ⅱ)

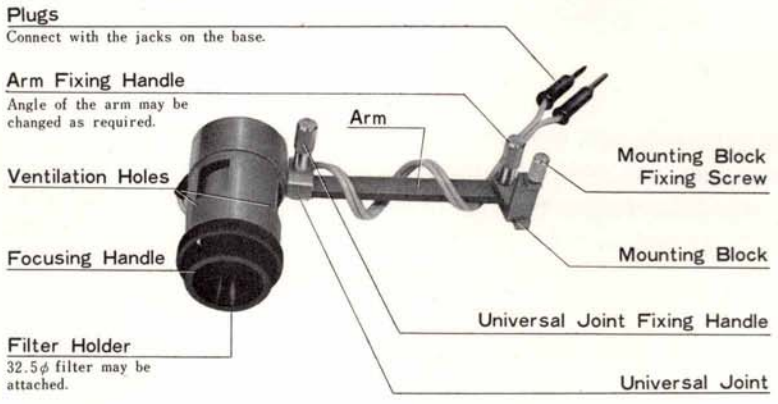

VI. ASSEMBLY

1. Set the microscope onto the supporting block of the arm and secure it tightly with the provided screw. (Fig.1)

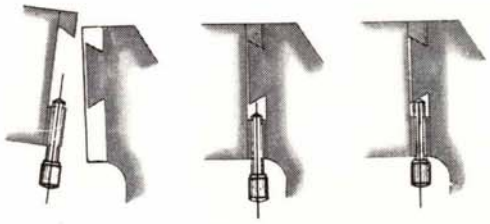

(Fig.1)

2. The head is tightened up with the head fixing screw.(Fig.2)

3. Remove the eyepiece caps from the eyepiece tubes and insert proper eyepieces.



(Fig.2)

4. Install the specimen holder (either at the right or the left mount) (Fig.3)



(Fig.3)

5. Mount the inclined illuminator onto the inclined illuminator mount on the base and tighten the fixing screw. Plug in the plugs of the illuminator properly. (Fig.4)

6. Connect the primary cord with an electric outlet.



(Fig.4)

Ⅶ. OPERATION

1. Turn on the MAIN switch and set the selector switch to DIA.

2. Set the Bright/Dark Field Selector Switch to B (bright field illumination).

3. Have the specimen clipped on the specimen holder, so that it will be positioned about 10mm above the center of the iris diaphragm. (Fig.5)



(Fig.5)

4. Dioptric adjustments.

   a. First set the diopter ring on the right eyepiece tube to "O". Set the variable magnification indicator ring at the maximum index of"4". Focus on the sepecimen with the focusing knob. (Fig.6)

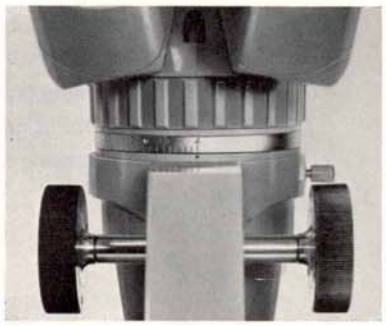

(Fig.6)

   b. Turn the variable magnification indicator ring to the minimum index of "0.7", but be sure not to move the specimen nor the focusing knob at this time.

   c. If the specimen is out of focus, do not move the focusing knob, but turn the right diopter ring to again bring into focus. (Fig.7)



(Fig 7)

   d, Now, again, turn the variable magnification indicator ring to "4".
   If the specimen is still out of focus, repeat steps a. to c. above.

   e. Turn the left diopter ring to adjust the left eye diopter.

Now both eyepiece tubes have been adjusted to meet your eye refraction. Remember the index numbers on the diopter rings, so that you can always adjust the eyepiece tubes quickly and correctly. In making dioptric adjustments, it is advisable to use as thin a specimen as possible or else to choose a specific spot on the specimen to be used as the focusing point.

5. Rotate the prism-boxes(right and left)to adjust the inter-pupillary distance. (Fig.8)

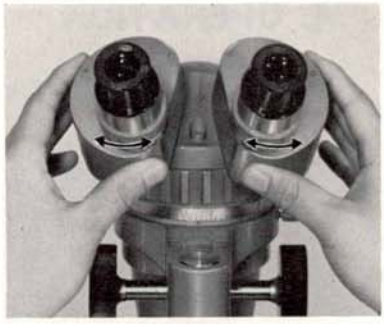

(Fig.8)

6. Set the variable magnification indicator ring at the required magnification for observation. (Fig.9) Although the specimen may be once set on the stage, illumination effect may be slightly different depending upon the position of the specimen. In such a case, move the specimen slightly while keeping it in focus by the focusing knob.

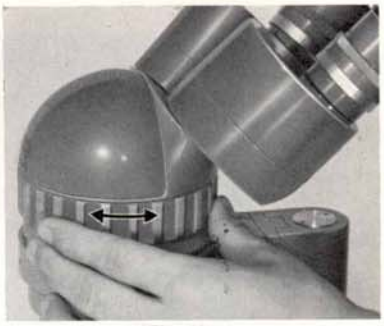

(Fig.9)

7. Set the bright/dark field selector switch to D for the dark-field illumination. The iris diaphragm is used to adiust the angle of dark-field illumination. The more the iris is stopped down, the further shielded is the upward (vertical) illumination, increasing the effect of the dark-field illumination.

8. When using the inclined illuminator, set the selector switch of the power source unit to EPI. If it is to be used in combination with the bright field or dark-field illumination, turn the switch to EPI-DIA.
   The focusing handle or the inclined illuminator will work to broaden or narrow down the illuminated area.

9. Bulb Change :
   When the bulb gets broken replace it with a new one in the following manner :
   (For Bright/Dark Field Illumination bulb)

   a. Remove the eyepieces from the eyepiece tubes and the whole microscope body from the arm.
   b. Remove the specimen holder from the stage.
   c. Let the stage lie on the side, remove the socket holder ring, and pull out the socket seat. (Fig.10)
   d. Remove the bulb by turning it counterclock-wise, replace it with a new one.

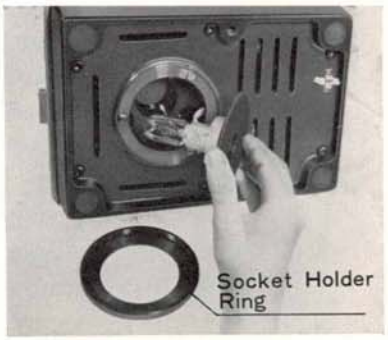

(Fig.10)

(For inclined illumination bulb)

Turn the focusing handle of the illuminator counter-clockwise, and it will be easily released from the illuminator. Then replace the bulb. (Fig.11)

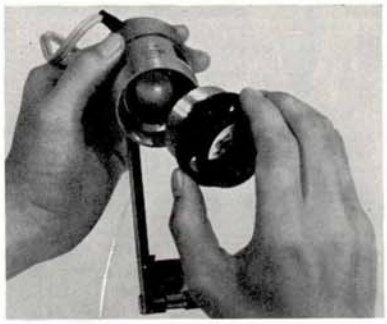

(Fig.11)

Ⅷ. OPTICAL CHARACTERISTICS

Eyepiece	Magnification Indicator Value	Total Magnification	Actual Viewfield(mm)	Working Distance(mm)
G10X	0.7	7X	31.4ϕ	88
	1	10X	22.0	〃
	1.5	15X	14.7	〃
	2	20X	11.0	〃
	2.5	25X	8.8	〃
	3	30X	7.3	〃
	3.5	35X	6.3	〃
	4	40X	5.5	〃
G20X	0.7	14X	17.4	88
	1	20X	12.2	〃
	1.5	30X	8.1	〃
	2	40X	6.1	〃
	2.5	50X	4.9	〃
	3	60X	4.1	〃
	3.5	70X	3.5	〃
	4	80X	3.1	〃

As we are continuously improving and developing our products, the equipment supplied may not agree in all details with the descriptions and/or illustrations shown in this booklet.

OLYMPUS OPTICAL CO., LTD.

43-2, HATAGAYA 2-CHOME, SHIBUYA-KU,
TOKYO, JAPAN.

7305 B 03 Printed in Japan