1955

BECK

MICROSCOPES

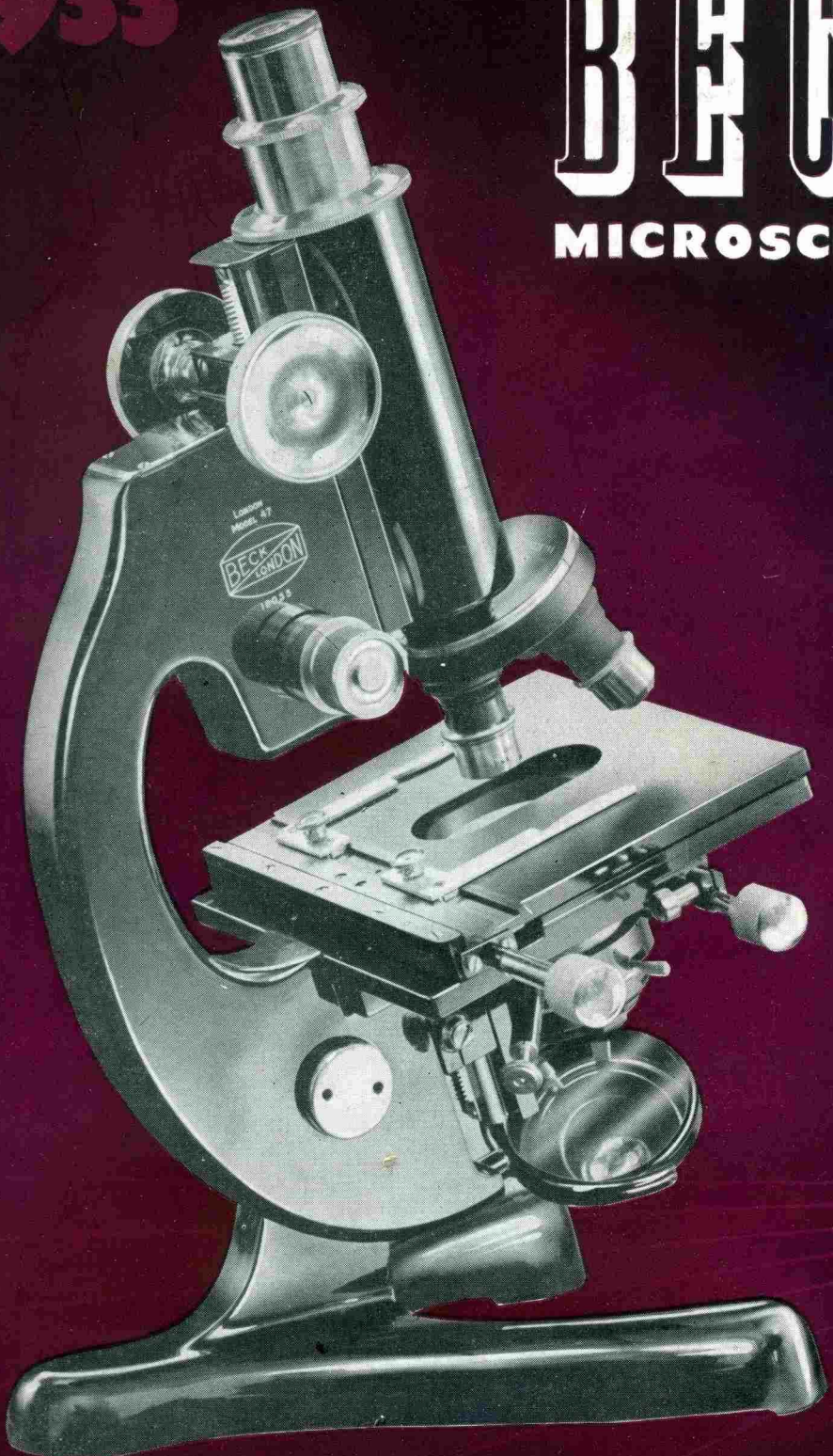



BECK

MICROSCOPES

R. & J. BECK, Ltd.
LONDON, ENGLAND.

Head Office & Showroom: 69/71, Mortimer Street, W.1.
Telephone : MUSeum 9696 (Private Branch Exchange).
Telegrams : "OBJECTIVE, WESDO, LONDON."

Factories:
Kentish Town, London, N.W.5 & Watford, Herts.

1955

FOREWORD.

This catalogue describes the range of microscopes which we produce, with the exception of stereoscopic microscopes which are described in a separate list. It will be seen that the instruments cover a very wide range of work. Several types have recently been added, notably the reflecting and the No. 50 Universal microscopes. The reflecting objectives are a completely new development, and one which is causing much interest among workers in certain fields. The special microscope stand designed for use with these enables the advantages of the objectives to be fully exploited. The No. 50 Universal microscope presents a complete apparatus for visual and photographic work by all methods of illumination, and by reason of its many new and unique features, it provides an instrument capable of any type of research work of the most exacting character.

Other important developments include the 35 mm. photomicrographic camera and new apparatus for macro photography, vertical phase contrast illumination and fluorescence microscopy. The new micrometric stage gives added facilities for extreme accuracy in measurement.

The servicing of instruments maintains their efficiency and prolongs their life. Many institutions have found such regular attention a considerable economy. We are prepared to enter into agreements for periodic servicing in any part of Great Britain.

In addition to this catalogue, the following publications connected with our products are available to anyone interested and will be sent on request :—

Stereoscopic binocular microscopes.
No. 50 Universal microscope.
Phase contrast apparatus.
Micro-projector.
Petrological microscope.
Reflecting microscope and objectives.
Vertiphase illuminator.

Catalogues of other instruments which we manufacture will also be sent upon application. These comprise :—

Spectroscopes.
Magnifiers.
Projectograph (opaque projector).
Robin Hill cloud camera.
Dobson ozone spectrophotometer.

We also undertake the manufacture of optical units and components in optical glass, quartz and fluorite, and shall be pleased to furnish quotations for these on receipt of specifications.

Beck instruments incorporate the knowledge acquired in over a century of manufacturing and will be found to maintain a standard of the very highest order.

BRITISH THROUGHOUT

No. 47 London Microscope.

The No. 47 series of microscopes constitutes an advance in microscope design and manufacture which will be appreciated by all users of these instruments. The manufacture throughout is of the most precise nature, working to the finest limits, so that the highest possible accuracy in the adjustments, and hence perfection in performance is attained. The microscope is so designed that it can be purchased in its simplest form and built up by means of mechanical stages, condensers, dark ground illuminators, nosepieces, object glass changers, extra object glasses and eyepieces, into a most complete instrument for high power research work, without the necessity of returning the instrument for fitting.

The limb is so shaped as to form a handle by which the instrument may be moved without risk of any damage to the adjustments. The limb, base and stage have been designed also to give the greatest possible rigidity and freedom from flexure. The positions of the milled heads operating the coarse and fine adjustments, the substage focussing and the mechanical stage are arranged to give the best possible accessibility and therefore, the greatest ease in working.

The enamels used for finishing give a very hard surface which will be found serviceable with prolonged use. All plated parts are chromium. The whole instrument is "tropicalized" and with due care no deterioration should occur even in the worst climatic conditions.

The optical performance of the object glasses, eyepieces, condensers and illuminators has always been a feature of Beck microscopes, and new computations and improved methods of accurate manufacture and adjustment have enabled the performance of the present product to be improved still further.

The specification of the No. 47 London microscope is as follows :-

The base is of substantial proportions having a spread of 8 in. × $5\frac{3}{4}$ in. with the weight concentrated in the front toes to ensure its stability in the inclined and horizontal positions.

The limb is a very rigid casting of robust construction. It is hinged into the base so that the instrument can be inclined to any angle from the vertical to the horizontal, and stops are provided at these two positions.

Focussing adjustments. Both the coarse and fine adjustments work with perfect smoothness and complete freedom from shake and loss of time. They are actuated by milled heads on each side of the limb, thus the movements are readily accessible to either hand. One of the fine adjustment milled heads is provided with a scale reading the movement of the adjustment, each division being equal to .005 mm.

The body tube is of large diameter and is fitted with an extending drawtube graduated in millimetres, enabling tube lengths of 140 to 200 mm. to be employed. In the 47A and B, a drawtube of fixed length (160 mm. including multiple nose piece) can be supplied. In the model 47 CI and LI the body, which has a fixed tube length of 160 mm. is fitted with a prismatic arrangement (see illustration page 16) so that the eyepiece is inclined at a convenient angle for observation when the instrument is in the vertical position.

The plain stage measures $4\frac{3}{8}$ in. square and gives a distance of $3\frac{1}{4}$ in. from the optical centre to the limb. Stage clips are provided. In all cases the stage is drilled ready to receive the detachable mechanical stage (No. 3305 or 3305A) so that this may be purchased separately and fitted without the necessity of returning the instrument.

The mirror. A double mirror, plane and concave is carried in a semi-circular fitting, which rotates, and in which the mirror turns.

Object glasses and eyepieces. All microscopes are fitted with our standard series, the performance of which has gained them a world-wide reputation. Object glasses, eyepieces and condensers are made to the standard (Royal Microscopical Society) threads and sizes. For particulars of object glasses and eyepieces, see pages 49–56.

Nosepieces. The nosepiece is made to the standard R.M.S. gauge and double, triple or quadruple dust-tight nosepieces can be attached. Objective changers can also be fitted.

The substages. The substages in this series are in various forms. No. 47A has a simple tubular substage for the reception of an iris diaphragm or Abbe condenser. No. 47B has a substage with focussing adjustment actuated by a spiral screw. The condenser can be swung out of the optical axis when not required. Nos. 47C, 47H, 47K and 47L have substages incorporating a quick-change method of inserting and detaching the apparatus, i.e., the condenser and dark ground illuminator. A rack and pinion motion is provided for focussing. Accurate centration is accomplished by means of milled heads. In the No. 47P the substage is fitted with a dovetailed slide for the interchange of apparatus, and each piece of apparatus utilized is fitted to a corresponding slide upon which it is individually centred.

Condensers and dark ground illuminators. For general work the Abbe condenser mounted with iris diaphragm and swing-out tray for colour screens is provided. The aplanatic condenser, achromatic condensers and dark ground illuminators, as described on pages 61–63, are also available. Where achromatic condensers or dark ground illuminators are employed, it is necessary to select a microscope fitted with a centring substage, as accurate centration is essential, or in the case of model No. 47P, a centring adjustment on each dovetailed slide is necessary.

Mechanical stages. On models 47A, B, C and CI a detachable mechanical stage, No. 3305, as illustrated on page 86, can be fitted. This gives a travel of 1 in. in the vertical direction and 3in. in the horizontal. The mechanical stage, No. 3305A, giving a travel of 2 in. in the vertical direction but otherwise similar to No. 3305 can also be fitted to these models. These stages are readily attached and detached. The plain stage is drilled to receive a fitting by which the mechanical stage is attached. The movements of the stage are actuated by specially cut racks and pinions with fine teeth, giving a very delicate movement. The mechanical stage provided for No. 47L is the No. 3515, illustrated on page 10, which is built into the instrument. It has a vertical travel of 1 in. and a horizontal travel of 3 in. The slide holders are both adjustable, so that slides of different sizes can be used. The left hand holder has an indicator by which it can be set to the correct position for the use of the scales. The scales read to .1 mm. by means of verniers. The slide holders can be entirely removed to leave the stage clear for petri dishes, culture plates or large objects. The No. 47 may also be fitted with the micrometric stage No. 3513 or 3514, described on page 84. This enables measurements up to 1 in. in either direction to be made with great accuracy. For using specimens mounted on 3 in. × 1 in. slides, the Topley top stage illustrated on page 84 is fitted. The No. 47P has a built-in mechanical stage of the pattern in which the whole top plate travels. It has movements of 1 in. in the vertical and 1½ in. in the horizontal directions. The movements are operated by milled heads at the side, which are under flush with the top surface of the stage, so that large flat objects can be accommodated upon the stage. Verniers can be fitted if required and to position 3 × 1 slides when these are employed, the Topley top stage is available, fitting by means of screws which engage in the stage clip holes.

No. 47H is fitted with a circular revolving stage which is provided with a centring adjustment actuated by two screws with milled heads. It is supplied with or without graduations in degrees on its edge. No. 47K has a similar revolving stage but is also provided with a mechanical stage giving travel of 3 in. in the horizontal and 1 in. in the vertical direction. The stage is illustrated on page 86. Scales and verniers are provided for reading the movements in both directions and the stage is supplied with graduations in degrees on its edge, which give an accuracy of 5′ when reading against the vernier.

Substage illuminator.—No. 2094 substage illuminator giving self-contained light can be fitted to any model of the No. 47 microscope, and will be found described on page 64.

The case is of hard wood and provided with a convenient carrying handle and fitted with lock and key. Special cases are available for use in tropical climates.

The particulars given of the No. 47 microscope apply also except as regards the body tube, to the high power binocular No. 48 (pages 18 to 22).

No. 47 London Microscope.



Stand No 47B.

No. 47 London Microscope.

No. 47A (1). Stand, with tubular substage and iris diaphragm, in case

No. 3260. Eyepiece, 42 mm. (×6) ... ...
No. 3231A. $\frac{2}{3}$ in. Object glass, 16 mm., without box ... ...
No. 3234A. $\frac{1}{6}$ in. Object glass, 4 mm., without box ... ...

No. 47A (2). Outfit as 47A (1) with the addition of:—

No. 3300. Double nosepiece ... ...

No. 47B (1). Stand, with spiral focussing and swing-out substage, in case

Nos. 3260/1. 2 Eyepieces, 42 mm. (×6) and 25 mm. (×10) ...
No. 3231A. $\frac{2}{3}$ in. Object glass, 16mm., without box ... ...
No. 3234A. $\frac{1}{6}$ in. Object glass, 4 mm., without box ... ...
No. 3286. Abbe condenser and iris diaphragm ... ...
No. 3301. Triple nosepiece ... ...

No. 47B (2). Stand, with spiral focussing and swing-out substage, in case

Nos. 3260/1. 2 Eyepieces, 42 mm. (×6) and 25 mm. (×10) ...
No. 3231A. $\frac{2}{3}$ in. Object glass, 16 mm., without box ... ...
No. 3234A. $\frac{1}{6}$ in. Object glass, 4 mm., without box ... ...
No. 3251. $\frac{1}{12}$ in. Object glass, 2 mm., oil immersion ... ...
No. 3286. Abbe condenser and iris diaphragm ... ...
No. 3301. Triple nosepiece... ... ...

No. 47B (3). Outfit as No. 47B (2) with the addition of:—

No. 3305. Detachable mechanical stage ... ...

The No. 47A and B can be supplied without the extending drawtube at a reduction in price of £1.

No. 3818. Tropical case ... ... extra
No. 3779. Angular eyepiece attachment ... ...

Substage illuminator No. 2094 as described on page 64 can be fitted to the above microscopes.

Any apparatus can be added or omitted at a corresponding addition or reduction of price.

No. 47 London Microscope.



Stand No. 47C with No. 3305 mechanical stage.

No. 47 London Microscope.

No. 47C (1). Stand, with rack and pinion focussing and centring substage, in case

Nos. 3260/1. 2 Eyepieces, 42 mm. (×6) and 25 mm. (×10) ...
No. 3231A. $\frac{2}{3}$ in. Object glass, 16 mm., without box ... ...
No. 3234A. $\frac{1}{6}$ in. Object glass, 4 mm., without box ... ...
No. 3286. Abbe condenser and iris diaphragm ... ...
No. 3301. Triple nosepiece ... ...

No. 47C (2). Stand, with rack and pinion focussing and centring substage, in case

Nos. 3260/1. 2 Eyepieces, 42 mm. (×6) and 25 mm. (×10) ...
No. 3231A. $\frac{2}{3}$ in. Object glass, 16 mm. ... ...
No. 3234A. $\frac{1}{6}$ in. Object glass, 4 mm. ... ...
No. 3251. $\frac{1}{12}$ in. Object glass, 2 mm., oil immersion ... ...
No. 3286. Abbe condenser and iris diaphragm ... ...
No. 3301. Triple nosepiece ... ...

No. 47C (2A). Outfit as No. 47C (2) but with large aperture object glasses ...

No. 47C (3). Stand, with rack and pinion focussing and centring substage, in case

Nos. 3260/2. 3 Eyepieces, 42mm. (×6), 25 mm. (×10) and 17 mm. (×15) ... ...
No. 3231. $\frac{2}{3}$ in. Object glass, 16 mm. ... ...
No. 3234. $\frac{1}{6}$ in. Object glass, 4 mm. ... ...
No. 3235 $\frac{1}{12}$ in. Object glass, 2 mm., oil immersion ... ...
No. 3296. High power dark ground illuminator, in substage fitting ... ...
No. 3298. Stop for $\frac{1}{12}$ in. object glass ... ...
No. 3288. Achromatic condenser and iris diaphragm ... ...
No. 3305. Detachable mechanical stage ... ...
No. 3301. Triple nosepiece ... ...

No. 47C (4). Outfit as No. 47C (3) but with addition of No. 3036, $\frac{1}{7}$in. object glass, 3.75 mm. fluorite, oil immersion, and No.3302 quadruple nosepiece in place of No.3301 triple nosepiece ... ...

No. 3818. Tropical case ... ... extra
Nos. 1820/22. Beck objective changer with three centring fittings, in case, in place of No. 3301 triple nosepiece ... ... extra
Nos. 1820/22. Beck objective changer with four centring fittings, in case, in place of No. 3302 quadruple nosepiece ... ... extra

Substage illuminator No. 2094 as described on page 64 can be fitted to the above microscopes.

Any apparatus can be added or omitted at a corresponding addition or reduction of price.

No. 47 London Microscope.

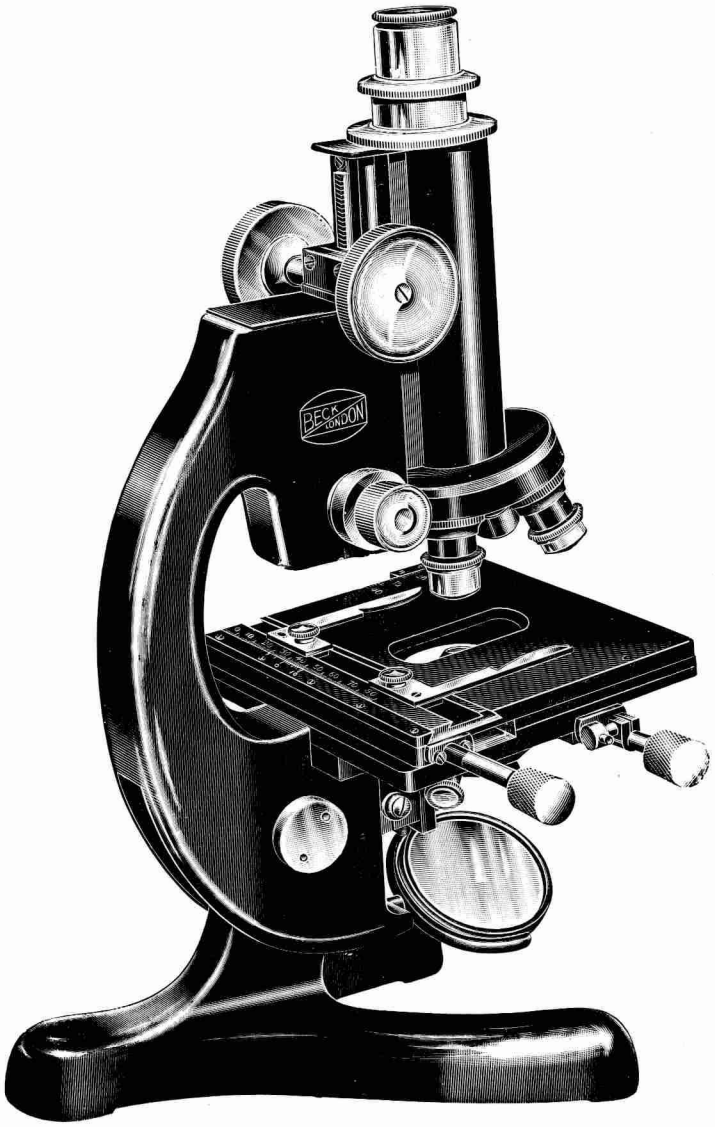

Stand No. 47L.

No. 47 London Microscope.

No. 47L (1). **Stand,** with built-in mechanical stage, rack and pinion focussing and centring substage, in case ... ...
Nos. 3260/1. 2 Eyepieces, 42 mm. (×6) and 25 mm. (×10) ...
No. 3231A. $\frac{2}{3}$ in. Object glass, 16 mm., without box ... ...
No. 3234A. $\frac{1}{6}$ in. Object glass, 4 mm., without box ... ...
No. 3286. Abbe condenser and iris diaphragm ... ...
No. 3300. Double nosepiece ... ...

No. 47L (2). **Stand,** with built-in mechanical stage, rack and pinion focussing and centring substage, in case ... ...
Nos. 3260/1. 2 Eyepieces, 42 mm. (×6) and 25 mm.(×10) ...
No. 3231A. $\frac{2}{3}$ in. Object glass, 16 mm. ... ...
No. 3234A. $\frac{1}{6}$ in. Object glass, 4 mm. ... ...
No. 3251. $\frac{1}{12}$ in. Object glass, 2 mm., oil immersion ... ...
No. 3286. Abbe condenser and iris diaphragm ... ...
No. 3301. Triple nosepiece ... ...

No. 47L (2A). **Outfit** as No. 47L (2) but with large aperture object glasses ...

No. 47L (3). **Stand,** with built-in mechanical stage, rack and pinion focussing and centring substage, in case ... ...
Nos. 3260/2. 3 Eyepieces, 42 mm. (×6), 25 mm. (×10) and 17 mm. (×15) ... ...
No. 3231. $\frac{2}{3}$ in. Object glass, 16 mm. ... ...
No. 3234. $\frac{1}{6}$ in. Object glass, 4 mm. ... ...
No. 3235. $\frac{1}{12}$ in. Object glass, 2 mm. oil immersion ... ...
No. 3296. High power dark ground illuminator, in substage fitting
No. 3298. Stop for $\frac{1}{12}$ in. object glass ... ...
No. 3288. Achromatic condenser and iris diaphragm ... ...
No. 3301. Triple nosepiece ... ...

No. 47L (4). **Outfit** as No. 47L (3) but with apochromatic object glasses and compensating eyepieces (×6, ×11 and ×17) ... ...

No. 47L (5). **Outfit** as No. 47L (3) but with addition of No. 3036, $\frac{1}{7}$in. object glass, 3.75 mm., fluorite, oil immersion, and No. 3302 quadruple nosepiece in place of No. 3301 triple nosepiece ...

No. 3818. Tropical case ... ... extra
Nos. 1820/22. Beck objective changer with three centring fittings, in case, in place of No. 3301 triple nosepiece ... ... extra
Nos. 1820/22. Beck objective changer with four centring fittings, in case, in place of No. 3302 quadruple nosepiece ... extra
Nos. 3513/4. Micrometric stage (see page 84) in place of stage as listed above, with No. 3750 Topley top plate ... ... extra

Substage illuminator No. 2094 as described on page 64 can be fitted to the above microscopes.

Any apparatus can be added or omitted at a corresponding addition or reduction of price.

No. 47 London Microscope.

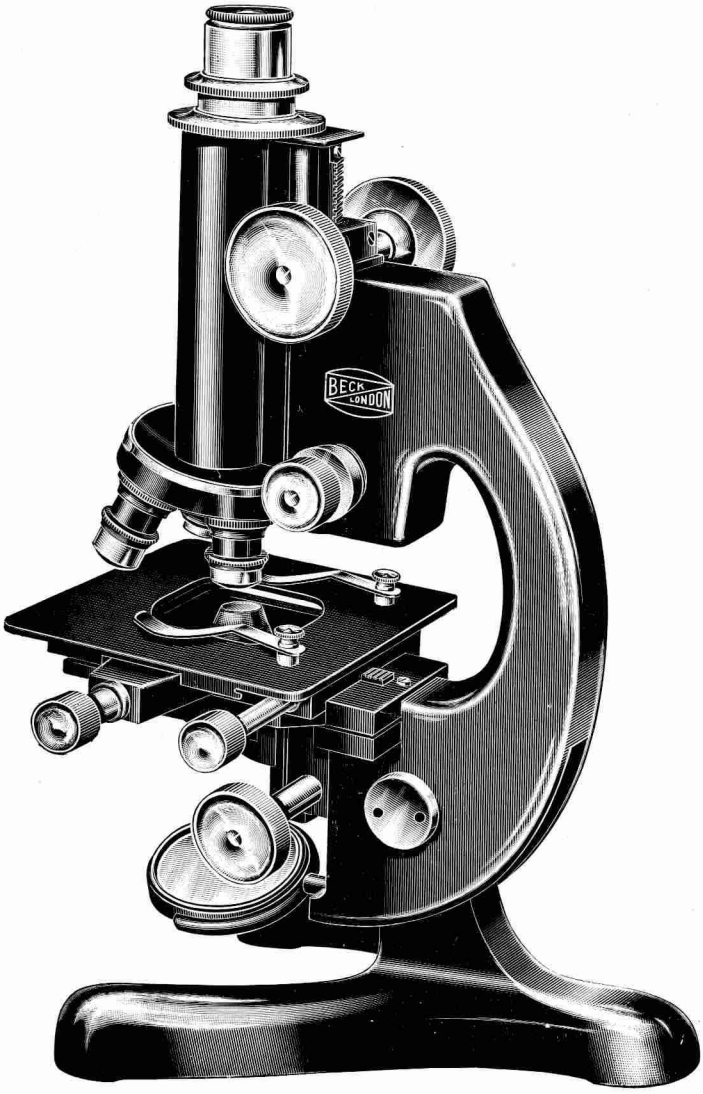

Stand No. 47P.

No. 47 London Microscope.

No. 47P (1). **Stand,** with built-in mechanical stage, rack and pinion focussing substage, in case ... ...
Nos. 3260/1. 2 Eyepieces, 42 mm. (×6) and 25 mm. (×10) ...
No. 3231A. $\frac{2}{3}$ in. Object glass, 16 mm. ... ...
No. 3234A. $\frac{1}{6}$ in. Object glass, 4 mm. ... ...
No. 3286. Abbe condenser and iris diaphragm ... ...
No. 3300. Double nosepiece ... ...

No. 47P (2). **Stand,** with built-in mechanical stage, rack and pinion focussing substage, in case ... ...
Nos. 3260/1. 2 Eyepieces, 42 mm. (×6) and 25 mm. (×10) ...
No. 3231A. $\frac{2}{3}$ in. Object glass, 16 mm. ... ...
No. 3234A. $\frac{1}{6}$ in. Object glass, 4 mm. ... ...
No. 3251. $\frac{1}{12}$ in. Object glass 2 mm., oil immersion ... ...
No. 3286. Abbe condenser and iris diaphragm ... ...
No. 3301. Triple nosepiece ... ...

No. 47P (3). **Outfit,** as No. 47P (2) but with large aperture object glasses

No. 47P (4). **Outfit** as No. 47P (3), with addition of No. 3297 high power dark ground illuminator in centring fitting and with stop for $\frac{1}{12}$ in. object glass ... ...

No. 47P (5). **Outfit** as No. 47P (3), with addition of No. 3294 high power focussing dark ground illuminator in centring fitting and with stop for $\frac{1}{12}$ in. object glass ... ...

No. 47P (6). **Outfit** as No. 47P (5) but with apochromatic object glasses, compensating eyepieces (×6 & ×11) and No. 3291 achromatic condenser in centring fitting, in place of Abbe condenser ...

No. 47P (7). **Outfit** as No. 47P (5) but with the addition of No. 3036, $\frac{1}{7}$in. object glass, 3.75 mm. fluorite, oil immersion, and No. 3302 quadruple nosepiece in place of No. 3301 triple nosepiece

No. 3818. Tropical case ... ... extra

No. 3750. Topley top stage ... ...

No. 3752. Verniers to stage ... ...

Nos. 1820/22. Beck objective changer with three centring fittings, in case, in place of No. 3301 triple nosepiece ... ... extra

Nos. 1820/22. Beck objective changer with four centring fittings, in case, in place of No. 3302 quadruple nosepiece ... ... extra

No. 3779. Angular eyepiece attachment ... ...

Substage illuminator No. 2094 as described on page 64 can be fitted to the above microscopes.

Any apparatus can be added or omitted at a corresponding addition or reduction of price.

No. 47 London Microscope.



Stand No. 47H with No. 3754 graduations and vernier to stage.

No. 47 London Microscope.

No. 47H (1). **Stand,** with revolving, centring stage, rack and pinion focussing and centring substage, in case ... ...
Nos. 3260/1. 2 Eyepieces, 42 mm. (×6) and 25mm. (×10) ...
No. 3231. $\frac{2}{3}$ in. Object glass, 16 mm. ... ...
No. 3234. $\frac{1}{6}$ in. Object glass, 4 mm. ... ...
No. 3235. $\frac{1}{12}$ in. Object glass, 2 mm., oil immersion ... ...
No. 3286. Abbe condenser and iris diaphragm ... ...
Nos. 1820/22. Beck objective changer, with three centring fittings, in case ... ...

No. 47K (1). **Stand,** with revolving, centring and mechanical stage, with graduations and vernier, rack and pinion focussing and centring substage, in case ... ...
Nos. 3260/1. 2 Eyepieces, 42 mm. (×6) and 25 mm. (×10) ...
No. 3231. $\frac{2}{3}$ in. Object glass, 16 mm. ... ...
No. 3234. $\frac{1}{6}$ in. Object glass, 4 mm. ... ...
No. 3235. $\frac{1}{12}$ in. Object glass, 2 mm., oil immersion ... ...
No. 3288. Achromatic condenser and iris diaphragm ... ...
Nos. 1820/22. Beck objective changer, with three centring fittings, in case ... ...

No. 47K (2). **Outfit** as No. 47K (1) but with the addition of No. 3293 high power focussing dark ground illuminator and stop for $\frac{1}{12}$ in. object glass

---

No. 47K (3). **Stand** with revolving, centring and mechanical stage, with graduations and vernier, rack and pinion focussing and centring substage, in case ... ...
Nos. 3266 and 3268. 2 Compensating eyepieces, 45 mm. (×6) and 22 mm. (×11) ... ...
No. 3241. $\frac{2}{3}$ in. Object glass, apochromatic, 16 mm. ... ...
No. 3245. $\frac{1}{6}$ in. Object glass, apochromatic, 4 mm. ... ...
No. 3248. $\frac{1}{12}$ in. Object glass, apochromatic, 2 mm., oil immersion ... ...
No. 3645. Achromatic condenser and iris diaphragm ... ...
Nos. 1820/22. Beck objective changer, with three centring fittings, in case ... ...

No. 47K (4). **Outfit** as No. 47K(3) but with the addition of No. 3293 high power focussing dark ground illuminator and stop for $\frac{1}{12}$ in. object glass ... ...

No. 47K (5). **Outfit** as No. 47K(2) but with addition of No. 3036, $\frac{1}{7}$ in. 3.75 mm. object glass, fluorite, oil immersion, and extra No. 1821 centring fitting ... ...

No. 3754. Graduations in degrees and vernier to stage of No. 47H (1) extra
No. 3818. Tropical case ... ... extra

Substage illuminator No. 2094 as described on page 64 can be fitted to the above microscopes.
Any apparatus can be added or omitted at a corresponding addition or reduction of price.

No. 47 London Microscope.

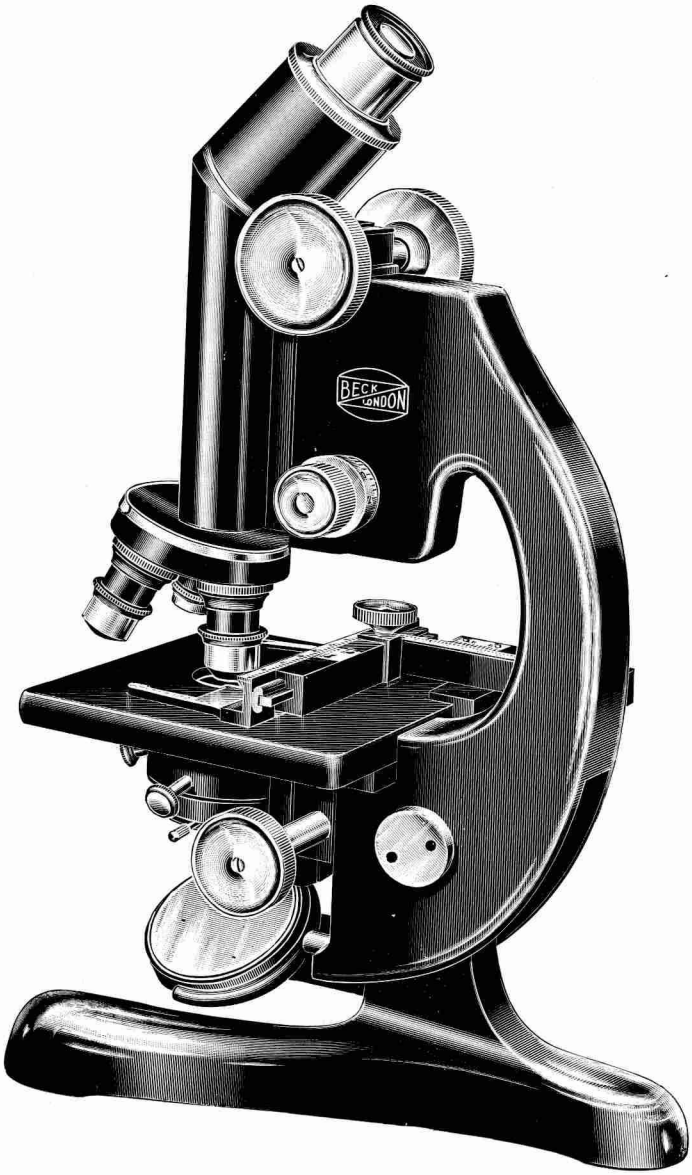

Stand No. 47CI with No. 3305 mechanical stage.

No. 47 London Microscope.

No. 47CI (2). Stand, with inclined body, rack and pinion focussing and centring substage, in case. ... ...

Nos. 3260/1. 2 Eyepieces, 42 mm. (×6) and 25 mm. (×10) ...
No. 3231A. $\frac{2}{3}$ in. Object glass, 16 mm. ... ...
No. 3234A. $\frac{1}{6}$ in. Object glass, 4 mm. ... ...
No. 3251. $\frac{1}{12}$ in. Object glass, 2 mm., oil immersion ...
No. 3286. Abbe condenser and iris diaphragm ... ...
No. 3301. Triple nosepiece ... ...

No. 47CI (2A). As outfit No. 47CI (2) but with large aperture object glasses ...

No. 3305. Detachable mechanical stage to above models ... ... extra

No. 47LI (2A). Stand, with inclined body, built-in mechanical stage, rack and pinion focussing and centring substage, in case ... ...

Nos. 3260/1. 2 Eyepieces, 42 mm. (×6) and 25 mm. (×10) ...
No. 3231. $\frac{2}{3}$ in. Object glass, 16 mm. ... ...
No. 3234. $\frac{1}{6}$ in. Object glass, 4 mm. ... ...
No. 3235. $\frac{1}{12}$ in. Object glass, 2 mm., oil immersion ... ...
No. 3286. Abbe condenser and iris diaphragm ... ...
No. 3301. Triple nosepiece ... ...

No. 47LI (4). Stand, with inclined body, built-in mechanical stage, rack and pinion focussing and centring substage, in case ... ...

Nos. 3260/2. 3 Eyepieces, 42 mm. (×6), 25 mm. (×10) and 17 mm. (×15) ... ...
No. 3231. $\frac{2}{3}$ in. Object glass, 16 mm. ... ...
No. 3234. $\frac{1}{6}$ in. Object glass, 4 mm. ... ...
No. 3036. $\frac{1}{7}$ in. Object glass, fluorite, 3.75 mm., oil immersion
No. 3235. $\frac{1}{12}$ in. Object glass, 2 mm., oil immersion ...
No. 3296. High power dark ground illuminator in substage fitting
No. 3298. Stop for $\frac{1}{12}$ in. object glass ... ...
No. 3288. Achromatic condenser and iris diaphragm ... ...
No. 3302. Quadruple nosepiece... ... ...

No. 3818. Tropical case ... ... extra

Nos. 1820/22. Beck objective changer with three centring fittings, in case, in place of No. 3301 triple nosepiece ... ... extra

Nos. 1820/22. Beck objective changer with four centring fittings, in case, in place of No. 3302 quadruple nosepiece ... ... extra

Substage illuminator No. 2094 as described on page 64 can be fitted to the above microscopes

Any apparatus can be added or omitted at a corresponding addition or reduction of price.

No. 48 Binocular and Monocular Microscope.

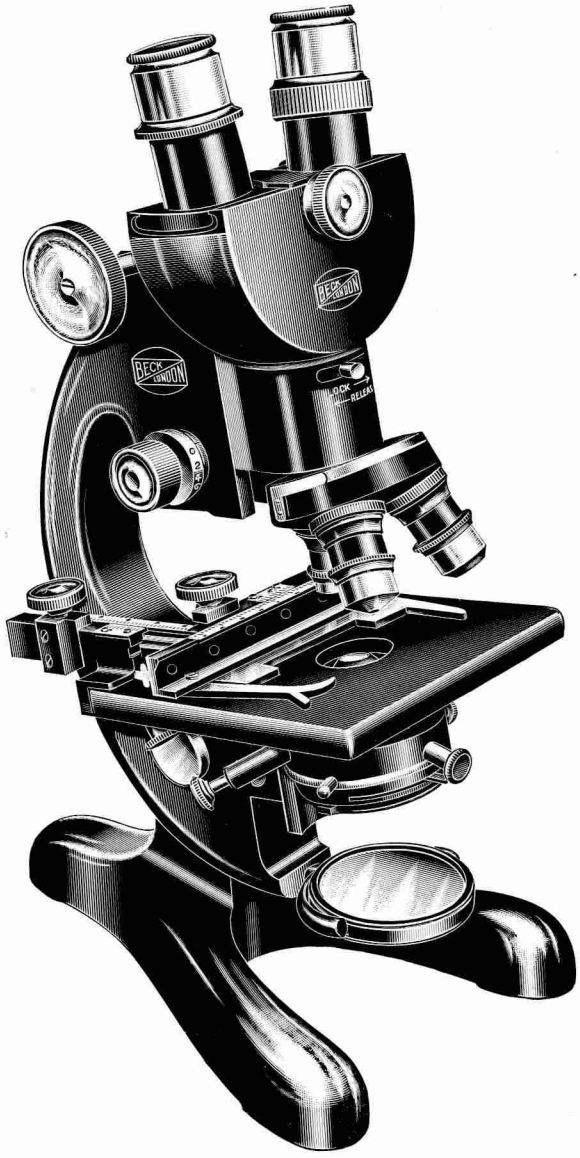

No. 48C. High Power Binocular Microscope with No. 3305 mechanical stage.

No. 48 Binocular and Monocular Microscope.

It is almost universally found among workers with the microscope that the binocular instrument, especially when observations are made over a prolonged period, affords complete freedom from eyestrain. This form is therefore becoming more and more popular with microscopists for all general purposes. It is obvious that there must be, however, no loss of definition and resolution even with high powers, and consequently the greatest care in manufacture and adjustment must be taken, so that the optical performance is in no way impaired by the more complicated optical system necessarily employed. The Beck binocular is designed and manufactured to fulfil these conditions, and to give the maximum of comfort in working.

The No. 48 microscope presents an entirely new arrangement of the binocular and monocular bodies, which will be found of great convenience. In some classes of work, when specimens in fluid are examined, it is necessary that the stage be kept horizontal and hence the microscope must be vertical. To use the instrument in this manner causes discomfort unless the eyepiece tubes are inclined at a suitable angle. In the No. 48 microscope the bodies, both binocular and monocular, may be used either in the straight or inclined position. This is achieved by having a prismatic adapter in a separate unit which inclines the line of vision and which may or may not be employed. Hence either body may be attached direct, or the inclining unit may be interposed.

The binocular body has an accurate adjustment for setting the interocular distance from 55 to 70 mm. and one tube has an adjustment to compensate for any difference in focus between the two eyes. The inclining units are fitted with a tube length corrector which compensates for the additional length of tube and brings the power back to normal. The monocular body has an extending drawtube, graduated, to vary the tube length.

This microscope can be supplied if desired as a monocular but with the fittings for the reception of the binocular body at a later date. This can be added without the instrument being returned.

The design of the stand of the No. 48 microscope is similar to that of the No. 47, and the general specification given on pages 4 and 5 applies in all respects except in the case of the body and drawtube. In the models listed, the stand of No. 48C is similar to No. 47C which is illustrated with the mechanical stage No. 3305 on page 8. No. 48L is similar to No. 47L illustrated on page 10 and No. 48P is similar to No. 47P illustrated on page 12. No. 48H is similar to No. 47H as illustrated on page 14. No. 48K has the addition of stage No. 3306 illustrated on page 86.

No. 48 Binocular and Monocular Microscope.

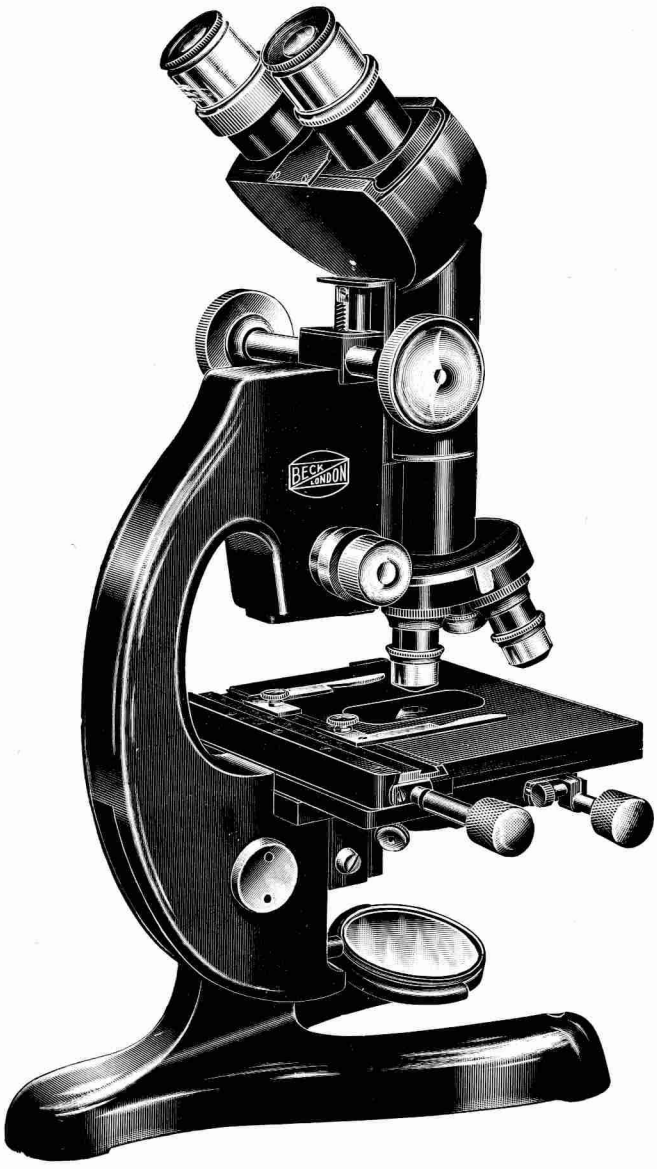

Stand No. 48LI.

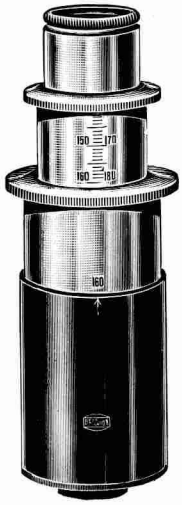

No. 1344.

No. 48 Binocular and Monocular Microscope.

No. 48C. High-power Binocular Microscope with plain stage and rack and pinion focussing and centring substage (as illustrated, with mechanical stage No. 3305, on page 18).
Stand only, in case ... ...

No. 48L. High-power Binocular Microscope with built-in mechanical stage and rack and pinion focussing and centring substage.
Stand only, in case ... ...

No. 48P. High-power Binocular Microscope with built-in mechanical stage and rack and pinion focussing substage.
Stand only, in case ... ...

No. 48H. High-power Binocular Microscope with revolving, centring stage and rack and pinion focussing and centring substage.
Stand only, in case ... ...

No. 48K. High-power Binocular Microscope with revolving, centring and mechanical stage and rack and pinion focussing and centring substage.
Stand only, in case ... ...

No. 48CI. As No. 48C but with addition of inclined unit ... ...

No. 48LI. As No. 48L but with addition of inclined unit (as illustrated on page 20) ... ...

No. 48PI. As No. 48P but with addition of inclined unit ... ...

No. 48HI. As No. 48H but with addition of inclined unit ... ...

No. 48KI. As No. 48K but with addition of inclined unit ... ...

No. 1344. Monocular body, interchangeable with binocular, for any of the above instruments ...

If so desired the microscope can in the first instance be supplied as a monocular only, but with the fittings for the reception of the binocular body at a later date. In this case there is a reduction in price of ... ...

No. 1346. Binocular body only ... ...

No. 3305. Detachable mechanical stage to Models 48C and 48CI ... ...

No. 3305A. Detachable mechanical stage to Models 48C and 48CI ... ...

No. 3752. Verniers to mechanical stage on Models 48P and 48PI ... ...

No. 3750. Topley top stage on Models 48P and 48PI ... ...

No. 3754. Graduations in degrees and vernier to stage of Models 48H and 48HI ... ...

Substage illuminator as described on page 64 can be fitted to the above microscopes.

Optical outfits suitable for the above will be found on page 22.

OPTICAL OUTFITS FOR NO. 48 MICROSCOPE.

With Achromatic Object Glasses.

Set G.

Nos. 3260/1. 2 pairs Eyepieces, 42 mm. (×6) and 25 mm. (×10) ...
No. 3231. $\frac{2}{3}$ in. Object glass, 16 mm. ... ...
No. 3234. $\frac{1}{6}$ in. Object glass, 4 mm. ... ...
No. 3235. $\frac{1}{12}$ in. Object glass, 2 mm., oil immersion ... ...
No. 3286. Abbe condenser and iris diaphragm ... ...
No. 3301. Triple nosepiece ... ...

Set M.

Nos. 3260/2. 3 pairs Eyepieces, 42 mm. (×6), 25 mm. (×10) and 17 mm. (×15) ... ...
No. 3231. $\frac{2}{3}$ in. Object glass, 16 mm. ... ...
No. 3234. $\frac{1}{6}$ in. Object glass, 4 mm. ... ...
No. 3036. $\frac{1}{7}$ in. Object glass, fluorite, 3.75 mm., oil immersion ...
No. 3235. $\frac{1}{12}$ in. Object glass 2 mm., oil immersion ... ...
No. 3298. Stop for $\frac{1}{12}$ in. object glass ... ...
No. 3288. Achromatic condenser and iris diaphragm ... ...
No. 3293. High power focussing dark ground illuminator ... ...
No. 3302. Quadruple nosepiece ... ...

Set N. As Set M but with No. 3645 achromatic condenser in place of No. 3288.

With Apochromatic Object Glasses.

Set K.

Nos. 3266 and 3268. 2 pairs Compensating eyepieces, 45 mm. (×6) and 22 mm. (×11) ... ...
No. 3241. $\frac{2}{3}$ in. Object glass, 16 mm. ... ...
No. 3244. $\frac{1}{6}$ in. Object glass, 4 mm. ... ...
No. 3248. $\frac{1}{12}$ in. Object glass 2 mm., oil immersion ... ...
No. 3288. Achromatic condenser and iris diaphragm ... ...
No. 3301. Triple nosepiece ... ...

Set L.

Nos. 3266, 3268, and 3270. 3 pairs Compensating eyepieces, 45 mm. (×6), 22 m.m. (×11) and 10 mm. (×25)... ...
No. 3241. $\frac{2}{3}$ in. Object glass, 16 mm. ... ...
No. 3242. $\frac{1}{3}$ in. Object glass, 8 mm. ... ...
No. 3245. $\frac{1}{6}$ in. Object glass, 4 mm. with correction collar ...
No. 3248. $\frac{1}{12}$ in. Object glass, 2 mm., oil immersion ... ...
No. 3291. Dry and immersion achromatic condenser ... ...
No. 3293. High power focussing dark ground illuminator ... ...
No. 3302. Quadruple nosepiece ... ...

Nos. 1820/22. Beck objective changer, with three centring fittings, in case, in place of No. 3301 triple nosepiece ... ... extra

Nos. 1820/22. Beck objective changer, with four centring fittings, in case, in place of No. 3302 quadruple nosepiece ... ... extra

For models No. 48P and 48PI prices will be quoted for condensers and dark ground illuminators with the necessary centring adjustments, on application.

The above are suggested outfits. Other object glasses, eyepieces, condensers and dark ground illuminators (see pages 49-51, 54, 61-63) may be added or those above be omitted at a corresponding adjustment of price.

Bench Metallurgical Microscope.

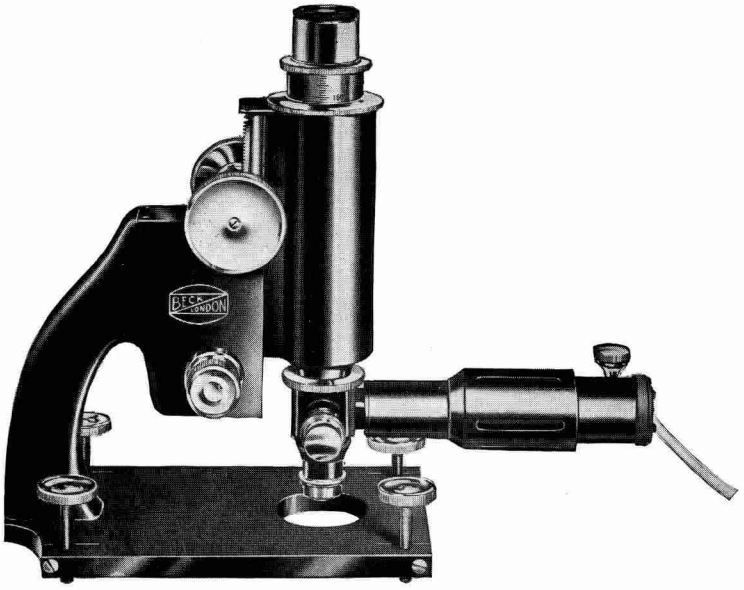

Stand No. 3226.

The design of this model renders the instrument very suitable for workshop use. For ordinary metallurgical purposes, the specimens are placed on the stage. For large surfaces or parts in situ the instrument can be placed in the required position and focussed directly through the hole in the stage. The vertical illuminator is of the thin glass type and is complete with lighting attachment. A reflector of the prism type can be supplied to work interchangeably. The lamp employed in the lighting attachment is 6 volts, 15 watts and can be operated from accumulators or from the mains supply with resistance or transformer. Full adjustments are provided to the reflector of the vertical illuminator facilitating accurate setting. The instrument has fine and coarse adjustments for focussing and the body has an adjustable drawtube. Levelling screws form the feet on which the instrument stands and enable it to be levelled, when it is desired to take photographs, or adjusted upon an irregular surface.

The object glasses are corrected for uncovered specimens and are " bloomed " to obviate internal reflections.

A case is not included in the price as listed, but can be supplied as an extra if required.

No. 3226A.	**Stand**	
	Nos. 3260/1. 2 Eyepieces, 42 mm. (×6) and 25 mm. (×10) ...	
	No. 3230M. $1\frac{1}{2}$ in. Object glass, 32 mm.	
	No. 3231M. $\frac{2}{3}$ in. Object glass, 16 mm.	
	No. 3234M. $\frac{1}{6}$ in. Object glass, 4 mm.	
	Nos. 1820/22. Beck objective changer with three fittings, in case ...	_____
No. 3226C.	**Stand**	
	Nos. 3260/1. 2 Eyepieces, 42 mm. (×6) and 25 mm. (×10) ...	
	No. 3230M. $1\frac{1}{2}$ in. Object glass, 32 mm.	
	No. 3231M. $\frac{2}{3}$ in. Object glass, 16 mm.	
	No. 3234M. $\frac{1}{6}$ in. Object glass, 4 mm.	
	No. 3235M. $\frac{1}{12}$ in. Object glass, 2 mm., oil immersion	
	Nos. 1820/22. Beck objective changer with four fittings, in case ...	_____
No. 4960A.	Prism reflector	
No. 2159.	Resistance for use with 100–250 volts D.C.	
No. 2160.	Transformer with dimming device for alternating current	
No. 2161.	Spare bulbs	each
No. 3632.	Case	

Laboratory Metallurgical Microscope.

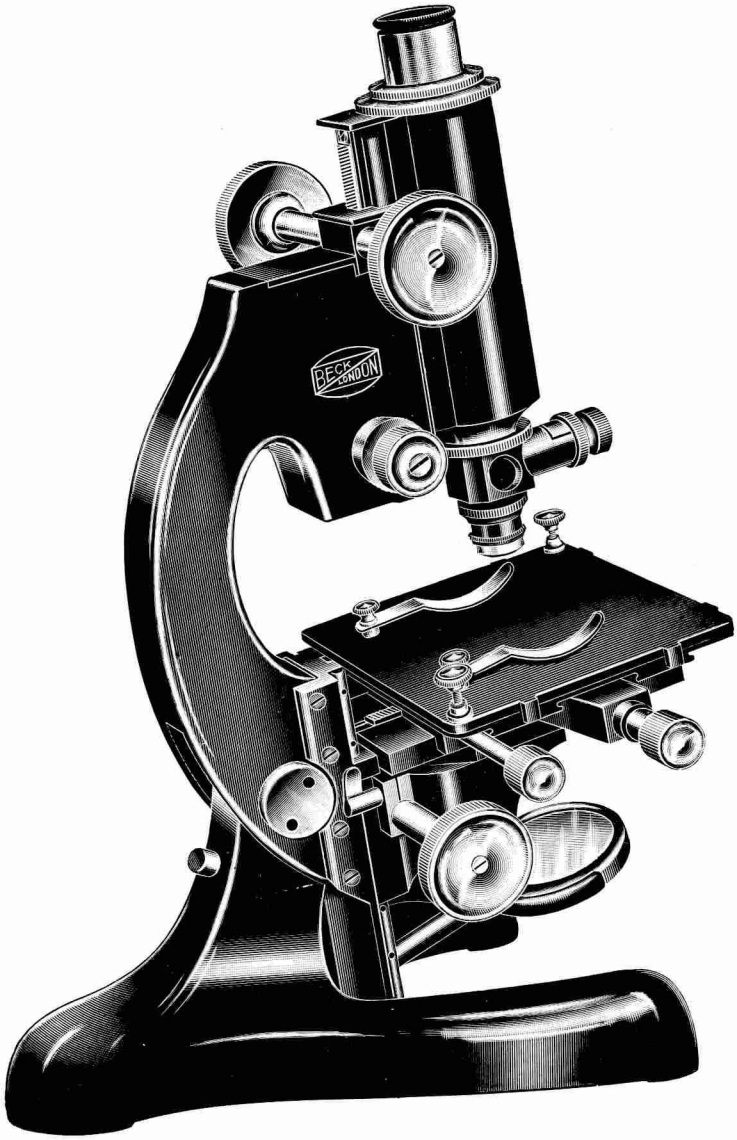

Stand No. 3228 with No. 3205 levelling top plate and No. 4960 vertical illuminator.

Laboratory Metallurgical Microscope.

This microscope is designed for metallurgical work either with prepared specimens mounted on slides or for examining large unmounted specimens. The instrument is of a very solid construction to secure the greatest rigidity and freedom from vibration in its parts, thus rendering it most satisfactory in use for either visual or photographic purposes. The base has a large spread, being 6 in. in width across the front toes and having a length from back to front of $8\frac{1}{2}$ in. This, combined with its considerable weight and the fact that the hinged pillar is placed well forward, ensures its stability in all positions from the vertical to the horizontal. The limb also is of very solid construction and is shaped for the convenient lifting of the microscope. The stage is carried upon a wide dovetailed slide and travels in a vertical direction, the movement being actuated by a rack and pinion with milled head. The body is also fitted upon a slide with rack and pinion movement. The coarse focussing can be done by adjustment of either the stage or the body, and a very large variation of separation between these parts is available for the accommodation of specimens, the maximum obtainable being 6 in., the mirror, which is not required for opaque objects, being removed. The fine focussing adjustment which operates upon the body is smooth and easy in working and is free from backlash. It has milled heads on either side of the limb and one is graduated to .005 mm.

The stage as shown in the illustration on page 26 is very robust, and the top plate is provided with mechanical adjustments for the lateral movement of the specimen. It allows a travel of $1\frac{1}{2}$ in. by 1 in. The stage will accommodate prepared specimens on slides, held in position by spring clips, or, the clips being removed, large and thick objects may be placed upon it and moved in the field of view by means of the mechanical adjustments of the stage. These are operated by milled heads projecting from the side. A levelling plate may be fitted upon the top surface of the stage, as illustrated on page 24. As an alternative, the micrometric stage, illustrated and described on page 84, may be fitted. This provides a very accurate means of measurement and of positioning the object under examination. The G.K.N. hardness testing apparatus may be employed on the microscope and the micrometric stage is most satisfactory for use in conjunction with it.

Alternative illuminators are available. For use with an external source of light, the No. 4960 vertical illuminator, as described on page 69, and illustrated on the microscope on page 24, is provided. The Wrighton-Beck illuminator, which has self-contained illumination and which is described on page 68, and shown on the microscope illustrated on page 26, can also be fitted.

Several forms of body are fitted. No. 3228 has a monocular body with adjustable drawtube graduated in millimetres. No. 3228B has a binocular body as shown in illustration on page 26. An inclining unit and a graduated monocular body may also be added. The bodies are similar to those employed in the No. 48 microscope described on pages 18 to 20. The use of the binocular body is found to give great relief from eyestrain and to be most satisfactory.

Although this microscope is essentially designed for the examination of opaque specimens, facilities are provided for its use with transparent objects. The substage mirror and rack and pinion focussing substage are available and render the instrument capable of the critical examination of transparent specimens.

The object glasses are corrected for use with uncovered objects, and are " bloomed " to minimise internal reflections and avoid any glare which may detract from the crispness of the image.

The microscopes are finished in stoved black enamel and all plated parts are in chromium. The case is of hardwood, with carrying handle and lock and key.

For photomicrographic work, the No. 2259 vertical camera, illustrated and described on pages 73 and 74 is recommended.

Laboratory Metallurgical Microscope.

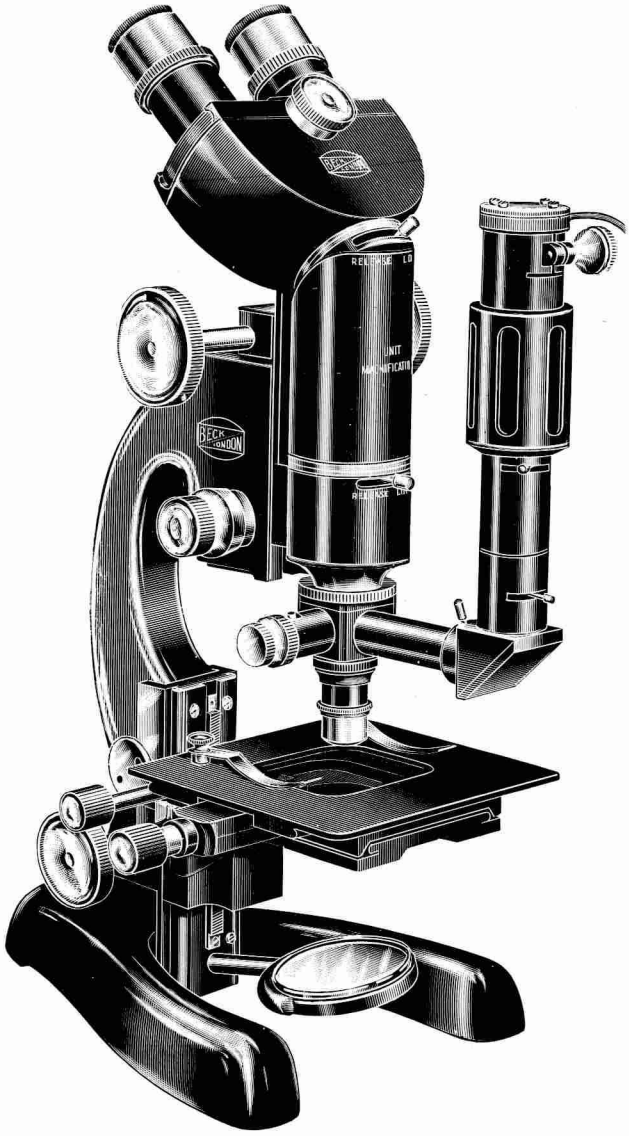

Stand No. 3228B with No. 1345 Inclining unit and No. 1193 Wrighton-Beck illuminator.

Laboratory Metallurgical Microscope.

No. 3228. **Stand only,** with monocular body, in case ... ... _____

No. 3228C. **Stand,** with monocular body, in case ... ...
No. 4960. Vertical illuminator ... ...
Nos. 3260/1. 2 Eyepieces, 42 mm. (×6) and 25 mm. (×10) ...
No. 3230M. $1\frac{1}{2}$ in. Object glass, 32 mm. ... ...
No. 3231M. $\frac{2}{3}$ in. Object glass, 16 mm. ... ...
No. 3234M. $\frac{1}{6}$ in. Object glass, 4 mm. ... ...
No. 3235M. $\frac{1}{12}$ in. Object glass, 2 mm., oil immersion ... ...
Nos. 1820/2. Beck objective changer and 4 fittings, in case ... _____

No. 3228D. **Stand,** with monocular body, in case ... ...
No. 4960. Vertical illuminator ... ...
Nos. 3266, 3268 and 3269. 3 Compensating eyepieces. 45 mm. (×6), 22 mm. (×11) and 15 mm. (×17) ...
No. 3241M. $\frac{2}{3}$ in. Object glass, apochromatic, 16 mm. ... ...
No. 3244M. $\frac{1}{6}$ in. Object glass, apochromatic, 4 mm. ... ...
No. 3248M. $\frac{1}{12}$ in. Object glass, apochromatic, 2 mm., oil immersion
Nos. 1820/2. Beck objective changer and 3 fittings, in case ... _____

No. 3228B. **Stand only,** with binocular body in case ... ... _____

No. 3228BC. **Stand,** with binocular body and equipment as No. 3228C with additional two eyepieces, paired, in case ... ... _____

No. 3228BD. **Stand,** with binocular body and equipment as No. 3228D, with additional three eyepieces, paired, in case ... ... _____

No. 1344. Monocular body interchangeable with binocular on Nos. 3228B, BC and BD ... ...
No. 1345. Inclining unit for binocular body and No. 1344 monocular body on Nos. 3228B, BC and BD ... ...
No. 3752. Verniers to stage ... ... extra
No. 3205. Levelling top plate to stage ... ... extra
No. 2278. Rack and pinion focussing substage ... ... extra
No. 1193. Wrighton-Beck illuminator with transformer in place of No. 4960 ... ... extra
No. 3513. Micrometric stage, reading in inches, in place of standard stage extra
No. 3514. Micrometric stage, metric, in place of standard stage ... extra
No. 3944. G.K.N. hardness testing apparatus ... ...

The above are suggested outfits. Other object glasses, eyepieces, or apparatus may be added or those above be omitted at a corresponding adjustment of price.

Suitable condensers for use with the No. 2278 substage will be found described on pages 61-63.

Reflecting Microscope.

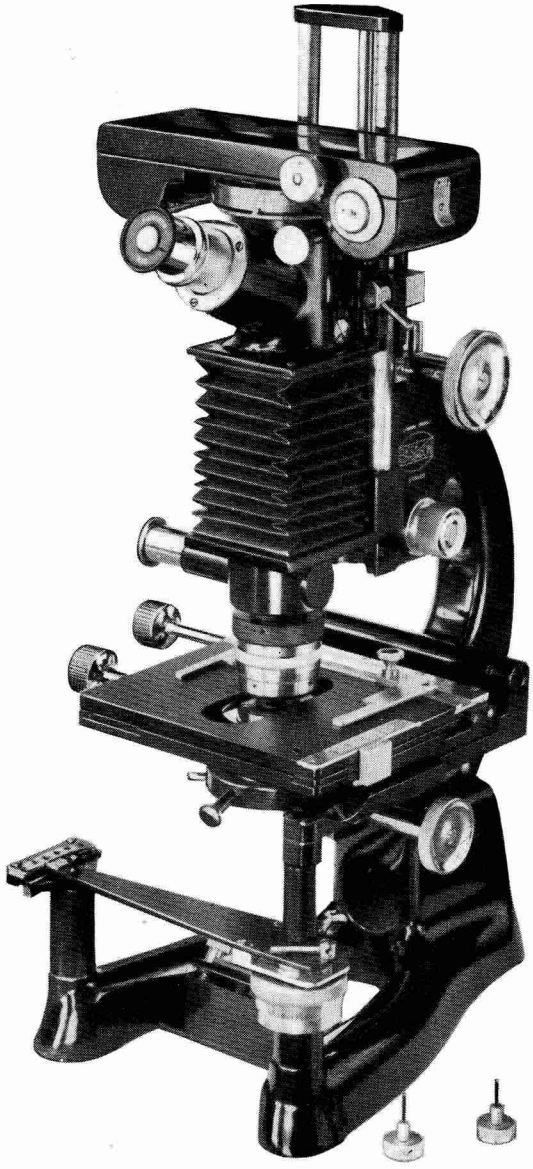

Stand No. 4196/9.

Reflecting Microscope.

A separate publication (No. 130) giving full particulars of this microscope is available and will be forwarded on application.

The reflecting microscope stand, developed from the designs of the Wheatstone Laboratory and the Medical Research Council Bio-physics Research Unit of King's College, London, has been designed to exploit the full possibilities of the reflecting objectives described on page 52.

The stand, the general design of which may be seen from the illustration on page 28, which is approximately one-third size, is made on very rigid lines to ensure the greatest stability and freedom from vibration. Special features have been introduced to fulfil the requirements for its purpose.

An additional focussing adjustment is fitted, which moves only the stage upon which the object is placed. By this means the de-focussing of the substage condenser is obviated as various levels of a thick specimen are examined. This point is not serious in refracting microscopy, but with reflecting objectives a form of illumination is created giving spurious effects. This adjustment is an extremely fine one and provides the very accurate focussing required for ultra violet photomicrography where the permissible depth of focus is very small. It is actuated by a lever which moves across a scale, the divisions of which represent an object movement of .25μ (.00025 mm.).

The mechanical stage is built into the microscope. It has a vertical travel of 1 inch and a horizontal travel of 3 inches. The slide holders are adjustable so that slides of different sizes can be used. The scales read to .1 mm. by means of verniers.

The substage, which is of the centring type, focussed by rack and pinion, is constructed to take ordinary condensers for use with visual light, or to take a second objective used as a condenser, when other sources of light are used.

The objective is carried on a fitting fixed to a slide which has a coarse focussing adjustment by rack and pinion, and a fine adjustment by micrometer screw calibrated to .005 mm. A removable 45° reflector is fitted immediately above the objective so that the image may be projected in a horizontal direction and formed upon the slit of an analytical spectrograph.

All mirrors are surface aluminised, to enable radiations from the infra-red to the short ultra violet regions of the spectrum to be employed for illumination.

The observing eyepiece is of the inclined type. It has a movable reflector, so that after observation and focussing, it can be removed from the axis and the light allowed to pass on to the film in the camera for photographic recording. The tube carries a special × 10 Ramsden eyepiece with cross line, having its focal plane set parfocal with the film plane of the camera.

The camera uses 35 mm. perforated film and takes up to 40 pictures, one inch diameter. An eight speed shutter is fitted.

No. 4196. Reflecting microscope with built in mechanical stage, substage, but without camera, objectives or eyepiece, in case ... ...

No. 4197. Camera for attachment to No. 4196, with shutter ... ...

No. 4199. Ramsden eyepiece × 10 with cross line ... ...

No. 4202. Ramsden eyepiece × 10 in fused with quartz, graticule ... ...

No. 50 Universal Microscope.

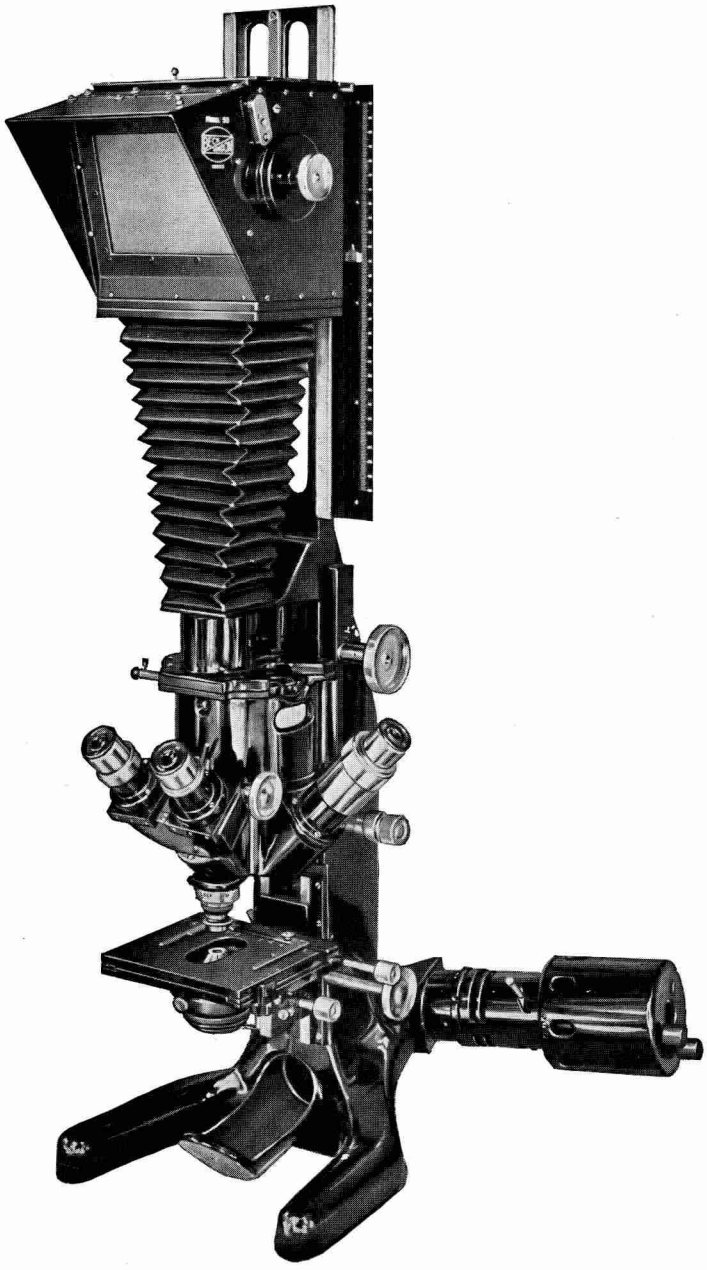

No. 50.

No. 50 Universal Microscope.

A special publication is available giving full particulars and price list of this microscope, a copy of which will be sent on application.

The No. 50 Universal Microscope has been designed to provide an instrument for visual, projection and photographic examinations by all methods usually employed by microscopists.

The whole apparatus is, as far as possible, constructed as a complete unit with a minimum of attachable parts. Thus, the change from monocular to binocular vision is made by rotating the two bodies in their turret and the change from visual observation to projection or photography by a simple movement. By this method of construction the rigidity of the whole instrument and its freedom from vibration are ensured. The accuracy and precision of the adjustments are of the highest order and the ease and convenience of manipulation will be appreciated, especially when work is done over a protracted period.

The instrument is supplied in three forms :-

No. 50 is for use with transparent objects. The illuminant is a closely wound coiled filament lamp fitted into a housing at the rear. This instrument is shown in the illustration on page 30. Examinations can be made by light and dark field and polarised light. Phase contrast illumination can also be employed.

No. 50M is for the examination of opaque specimens and is provided with a supplementary illuminating bench. Tungsten filament, mercury vapour or xenon discharge lamps can be provided as the light source. The various illuminators for work with light and dark field and by polarised light are provided. The phase contrast method can also be used.

No. 50N is the complete apparatus for both transparent and opaque work by the methods and with the apparatus referred to above. It provides a universal instrument for research work.

In the construction of this apparatus full advantage has been taken of all latest improvements in processes of manufacture. Precision in both mechanical and optical work has advanced to a very high standard and the No. 50 Universal microscope has been designed in every detail to conform to these enhanced standards and to enable the microscopist to utilise the latest methods with convenience and ease.

The advantages of this instrument have been appreciated by a number of well-known research institutions and industrial undertakings where outfits have been installed.

Petrological Microscope.

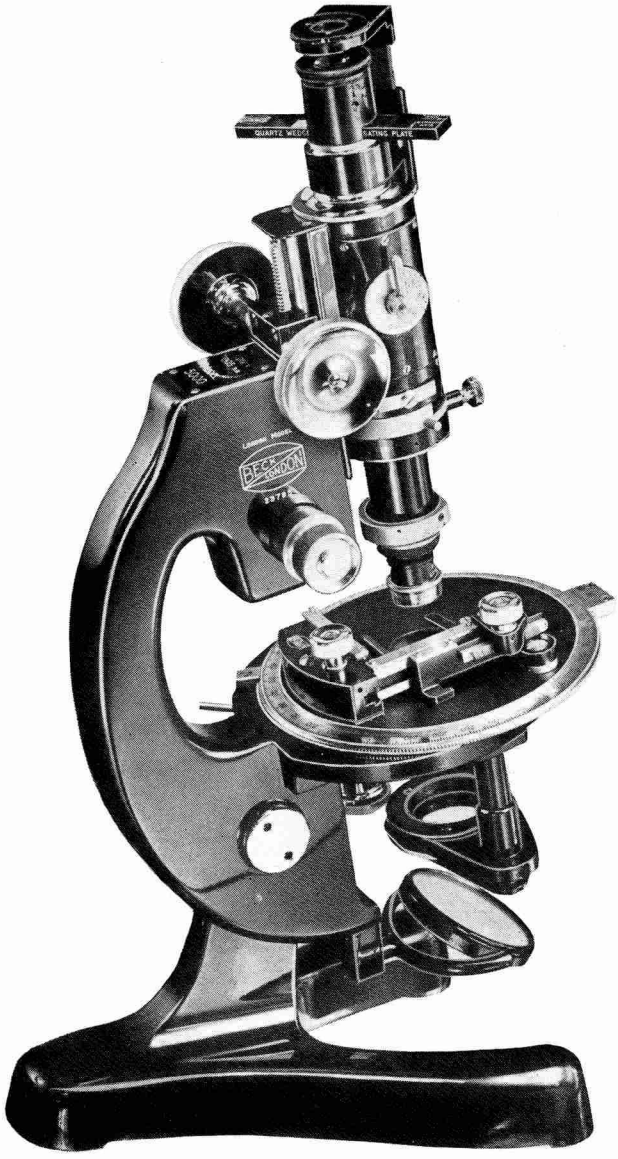

No. 5000. Petrological microscope with No. 5005 mechanical stage and No. 5010 eyepiece analyser.

Petrological Microscope.

A separate publication (No. 135) is available giving full particulars of the microscope and accessories, together with the price schedule, including the special objectives for petrological work.

This microscope provides an instrument for general petrological work and for the use of advanced students. It conforms to the specification laid down by the Minerological Society and will be found to be simple and effective in use.

The microscope is of good size and stability and the finish is durable. The following features are incorporated :—

The coarse and fine focussing adjustments operate from both sides of the limb, and are free from loss of time.

The stage is 5 in. diameter, rotatable and graduated in degrees with a vernier reading to 5 mins. A mechanical stage (No. 5005), as shown in the illustration on page 32, can be fitted.

The mirror is double, plane and concave with full adjustments.

The analyser and polariser are " Polaroid." The analyser is fitted in a slide so that it may be put rapidly in and out of action, A slot below the analyser is provided to carry quartz plates, etc. The polariser swings out and has a rotating motion, clicked and engraved at every 90°. An eyepiece analyser is also available as illustrated on the instrument on page 32.

A centring nosepiece is fitted to the body. Centring objective changers and multiple nosepieces can be provided and a vertical illuminator may be attached.

The Bertrand lens is on the principle invented by Dr. A. F. Hallimond and does not require focussing for use with the various objectives.

The substage carries a condenser and has focussing and swing-out movements. A diffusing screen in separate swing-out fitting is provided. The eyepieces have crosslines and are slotted for the use of wedges, etc.

The objectives are of the highest quality and are strain free, i.e. they are manufactured to have no depolarising effects.

The cabinet is of hardwood and has lock and key.

No. 5000. **Petrological microscope,** with Abbe condenser, in hardwood case, without objectives, objective changers or eyepieces ... ...

No. 5005. Mechanical stage ... ...

No. 5010. Eyepiece analyser ... ...

Bullet Comparison Microscope.



No. 2122 with Camera No. 3654.

Bullet Comparison Microscope.

The general design of this apparatus may be seen from the illustration. It consists of two microscopes, each with its own illuminant, connected by means of a comparison eyepiece. Its purpose is to give, side by side in the field of the eyepiece, images of the objects seen through the two microscopes.

The microscopes are provided with coarse and fine focussing adjustments. The stages are provided with mechanical movements in both directions for correctly positioning the object, and are mounted on a substantial slide, with rack and pinion for focussing purposes. Each stage carries a holder with a rotating adjustment operated by a fine screw thread and milled head for the slow rotation of the bullet, for systematic examination. Depths may be measured by focussing the different levels by means of the fine adjustment.

The comparison eyepiece which is described on page 55, combines the images in the two microscopes so that they are seen separated only by a fine dividing line.

Two Tenslite lamps, as described on page 79 are provided for the illumination of the two objects under examination. Each has a built-in transformer with dimming switch by means of which the illumination may be matched. Full adjustments are fitted for the alteration of the angle of incidence of the light beam. The upright supports carrying the lamp are made with extra height, so that the light may be directed upon the objects from a nearly vertical position.

The microscopes are mounted upon a hardwood baseboard. to which they are bolted in their correct positions and in exact alignment with each other. The illuminating lamps are also mounted on the baseboard by means of subsidiary boards which slide between runners enabling them to be brought toward the microscopes when a steep angle of inclination of the incident light is required and away from the microscope when it is desired to use the substage mirrors for the examination of transparent objects.

The No. 3654 camera, which is ¼ plate size, fits over the comparison eyepiece. A shutter operated by an antinous release, giving bulb and time exposures, is provided. This is fully described on page 71.

A series of objectives are included, which are exactly matched for focus, thus ensuring that magnifications given with each microscope are identical. A range of magnifying powers from approximately ×10 to ×45 is obtainable. Should it be desired to use the microscopes individually, further objectives and eyepieces may be selected from the lists on pages 50 and 54.

No. 2122. Bullet comparison microscope, complete as described, with matched 60 mm., 50 mm. and 32 mm. objectives, bullet holders, comparison eyepiece, two illuminating lamps with transformers and dimming switches, all mounted on baseboard and including cabinets for the microscopes... ... ...

No. 3654. Eyepiece camera, ¼ plate, with focussing screen and two metal plateholders ...

No. 3517. Spare bulbs ... ... each

No. 3655. Extra metal plateholders ... ... each

Depth Measurement Microscope.

(Littlejohn-Beck)



No. 2414.

The accurate measurement of depth, where the amount is very small, is a matter which presents some difficulty. The Littlejohn-Beck depth measuring microscope has been designed for this purpose particularly in connection with photo-engraved plates and photogravure cylinders where the depth of the etching is slight but of great importance. Although originally designed for this work, it can be used for any measurements of similar character.

The microscope, as shown in the illustration, has a device fitted to the nosepiece, for very accurate focussing by means of a large milled ring surrounding the objectives. The top surface of the object is focussed and the graduated dial set to its zero position. The bottom of the depression is then focussed by revolving the milled ring, and the dial records the depth of the depression, each division representing 0.0001 in. The readings are very conveniently taken and a magnifier is provided to render the divisions and numbers easily decipherable. For the correct use of this method of measurement, the illumination of the object is of the greatest importance. The method adopted in this microscope is on the principle of the Beck-Chapman illuminator, described on page 67, which has been found to give the most satisfactory results as regards both ease of manipulation and accuracy of results. Various magnifying powers are obtainable by use of the objectives as listed. A wide field eyepiece, ×16, is fitted. It has a cross line and a focussing top lens.

The microscope is mounted on two forms of base, one, as shown, is more suited to ordinary microscopic examinations and measurements with small specimens, which are placed upon the glass stage. The other form is made to place upon photogravure cylinders, the microscope focussing direct upon them. Particulars of the latter will be sent on application.

Although primarily designed for measurement, the instrument can be used for ordinary microscopic examinations and a low power objective is made for this purpose in addition to those suitable for measurement. This low power will be found very useful in the examination of certain objects but is not of sufficiently high power for measurement. The rack and pinion coarse focussing motion enables objects considerably varying in thickness to be accommodated.

No. 2414. **Depth measurement microscope** (Littlejohn-Beck) without objective, in case ...

No. 2416. $\frac{2}{3}$ in. Object glass, 16 mm. ... ...

No. 2417. $\frac{1}{3}$ in. Object glass, 8 mm. ... ...

No. 2418. $\frac{1}{6}$ in. Object glass, 4 mm. ... ...

No. 2415. $1\frac{1}{2}$ in. Object glass, 32 mm. for observation only ... ...

No. 2160. Transformer with dimming device for alternating current ... ...

No. 2161. Spare bulbs ... ... each.

Micrometric Microscope.

No. 3523.	**Micrometric microscope,** stand only, in case	
No. 2278.	Rack and pinion focussing substage	
No. 3750.	Topley top stage	
No. 3264.	Eyepiece with cross lines	

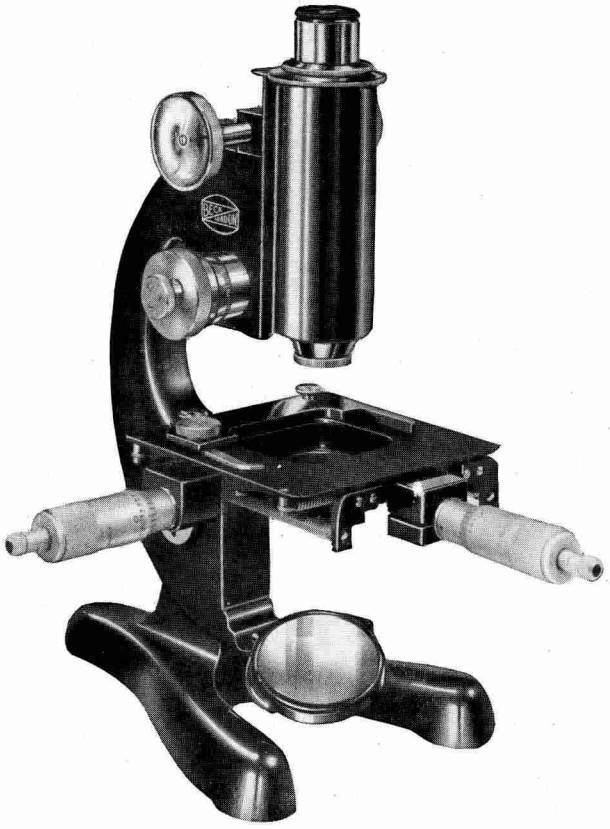

No. 3523 with No. 3750.

The purpose of this microscope is to enable very accurate measurements to be made of small objects, in three dimensions, the length, width and depth or thickness.

The measurement of depth is made by means of the fine adjustment, the image being focussed in turn upon the upper and lower surface of the object. The readings are made on the graduated drum by which the adjustment is operated. The maximum depth which can be measured is .1 in. and each division on the drum represents .0001 in. or in the metric model .002 mm. The measurements of length and width are made by means of the micrometer stage by reference to a crossline in the eyepiece. The object being measured is aligned at one extremity with the line in the eyepiece and then travelled across the field until the other extremity is upon the line. The movement is read upon the graduated drum of the micrometer. The stage fitted is No. 3513/4 (see page 84). The maximum size of object which can be measured is 1 in., and an accuracy of .001 in or .01 mm. is obtainable. Finer accuracies than these are possible by means of the fitting of larger micrometers, particulars of which will be sent on application.

The microscope is based on the No. 47 previously described. It can be used with either transparent or opaque objects. For the former, a substage can be fitted which will accommodate any of the condensers described on pages 61 to 63. For opaque objects the Beck-Chapman illuminator, as described on page 67, or the vertical illuminators, listed on pages 68 and 69, may be utilized. Standard objectives and eyepieces are employed, but in taking depth measurements, the higher powers should be used to overcome any error in reading due to the depth of focus of the objective. The instrument is supplied in a hard wood case with lock and key.

Film Measuring Microscope.

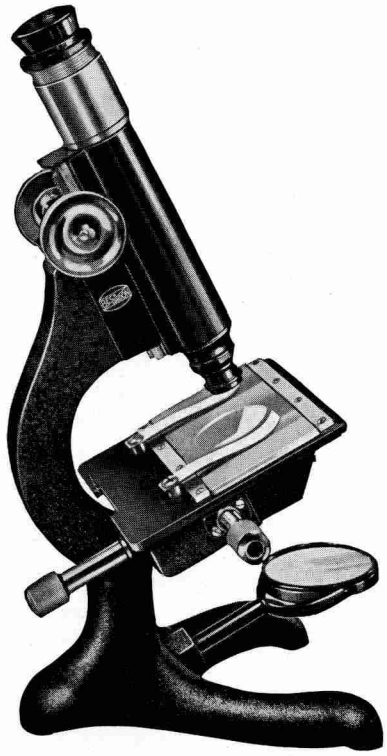

No. 1772.

No. 1772. Film measuring microscope, in case

No. 1773. High power objective ... ...

The No. 1772 microscope is for the purpose of making accurate measurements of the characteristics of cinematograph film. It consists of a rigid stand, as shown in the illustration, with complete adjustments for focussing and for the positioning of the film in the field of view. The film is held flat by a glass pressure plate. The optical train is specially computed to obviate any distortion in the image which would result in inaccurate readings. A graticule is fitted, by reference to which the readings are made.

The frequencies recorded on the film track, the position and width of the track, can be checked and errors measured. The size, shape and position of perforation can also be observed and measured. A high power objective, No. 1773, is available for examining and measuring the grain size of the emulsion. The instrument is supplied in a hard wood case.

Brinell Microscopes.

No. 1775. Brinell testing microscope reading to .10 mm., in case ...

No. 1776. Brinell testing microscope reading to .05 mm., in case ...

These microscopes are for the measurement of impressions made by the Brinell hardness test. The general design of the instrument may be seen from the illustration. The optical units give freedom from distortion and great accuracy is obtained in the readings. The readings are made by means of a graticule in the eyepiece. Readings of impressions up to 6 mm. can be made, and the scale is so divided that each division equals either .10 mm. or .050 mm. A focussing drawtube is provided for setting, which can be clamped in position and the eye lens is also adjustable for focussing the graticule for individual sight. The underside of the base is accurately machined, and the instrument is used by placing it in contact with the material in which the impression has been made. The instrument is supplied in a leatherette covered case.



No. 1775/6.

Micrometer Microscope.

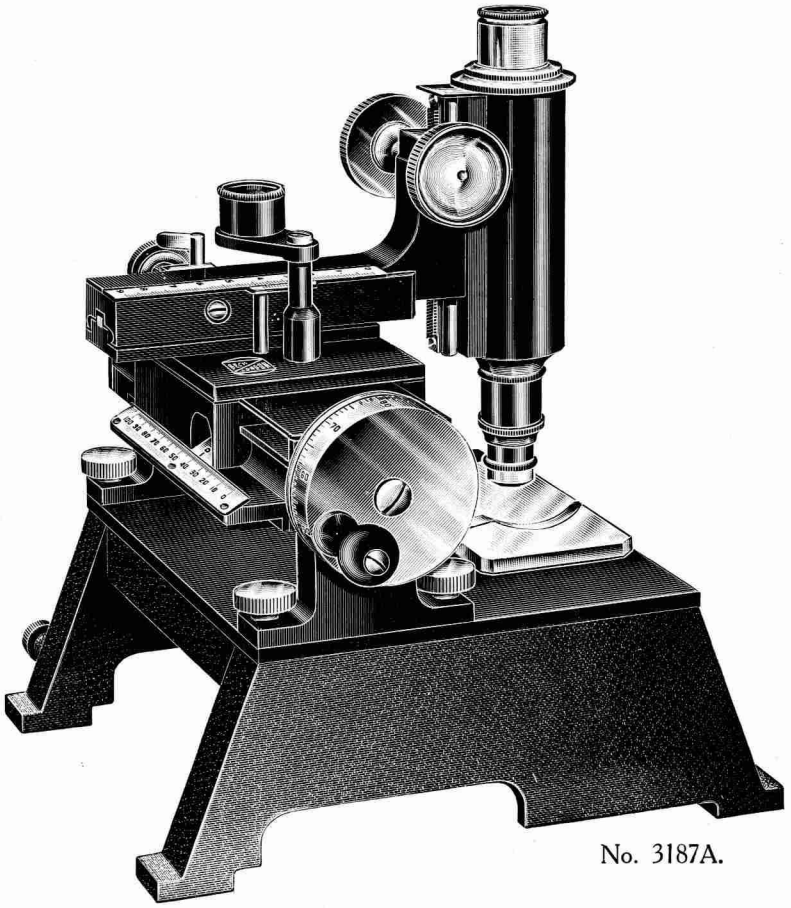

No. 3187A.

A most accurate method of measurement for objects of considerable size is by means of a travelling microscope moved in a dovetailed slide by a micrometer screw. The eyepiece has a cross line which is set alternately on the two extremities of the object and the amount of travel, giving the size, is read on the scales and divided drum. An essential feature of this type of instrument is great rigidity and in the design and construction of the microscope described great care has been taken to ensure that there is no risk of flexure by which the accuracy of the readings could be impaired. By means of the micrometer motion, objects up to a length of 4 inches can be measured. A cross motion actuated by rack and pinion is provided. This has a travel of 3 inches and can be fitted with a scale and vernier, with a reading magnifier. The cross motion is fitted with a clamp.

Two forms of the microscope are made. No. 3187 gives metric readings, each division on the drum actuating the micrometer screw, representing .01 mm. In No. 3187A the vernier to the cross motion reads to .1 mm. In No. 3189 the micrometer screw reads to .0001 inch and the vernier on the cross motion of No. 3189A reads to .001 inch.

The general construction of the stand can be seen from the illustrations, which are approximately two-fifths size. Either opaque or transparent objects may be measured, the latter being illuminated by light thrown from below, an aperture in the stage being provided for the purpose. The Wrighton Beck vertical illuminator can be fitted if desired.

The instrument can also be used as a reading microscope, it being placed for this purpose on the three levelling feet fitted on the side of the stand. A telescope object glass which screws into the nosepiece in place of the microscope object glass enables distant scales or other objects to be read or measured.

Other object glasses may be substituted if a different magnifying power in the microscope is desirable.

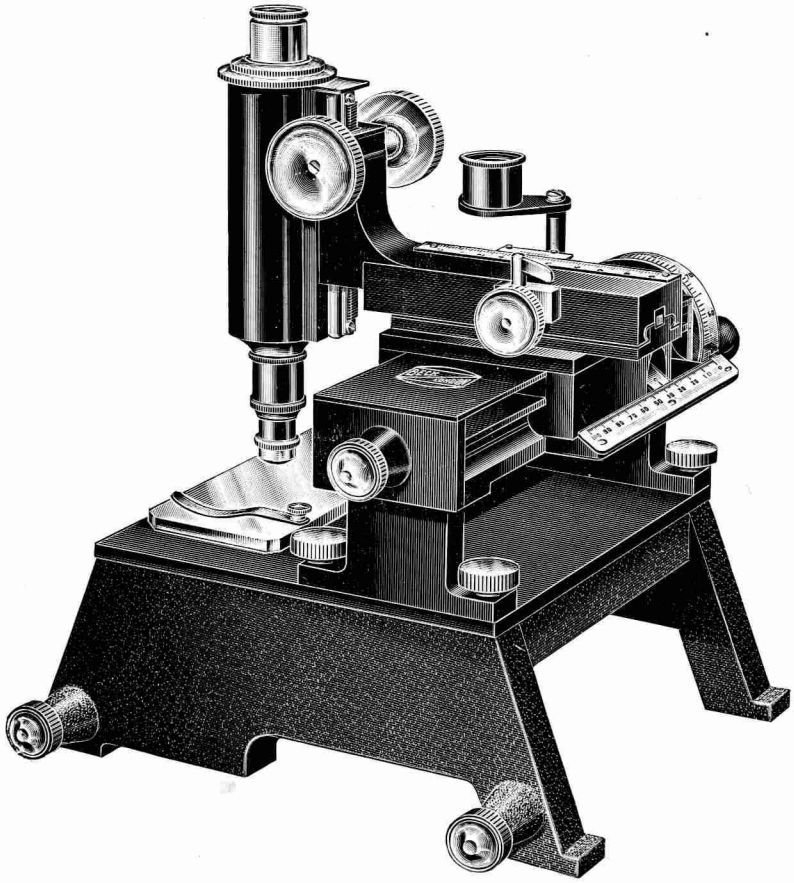

No. 3187A.

No. 3187. **Micrometer microscope,** with eyepiece with cross lines and $\frac{2}{3}$ in. (16 mm.) object glass

No. 3187A. As No. 3187 but with addition of verniers and reading magnifier ... ...

No. 3189. **Micrometer microscope,** with eyepiece with cross lines and $\frac{2}{3}$ in. (16 mm.) object glass

No. 3189A. As No. 3189 but with addition of verniers and reading magnifier ... ...

No. 3188. Telescope object glass, in mount to fit object glassthread ... ...

No. 1193. Wrighton-Beck vertical illuminator with transformer... ... ...

No. 3546. Case with lock and key ... ...

Process Microscope.

No. 3186. **Process microscope,** with eyepiece 42mm. (×6) and ⅔ in. (16mm.) object glass...

No. 3186A. As No. 3186 but with cross lines to eyepiece ... ...

No. 3186B. As No. 3186 but with micrometer scale to eyepiece ... ...

No. 2303. Case, hardwood, with lock and key ... ...

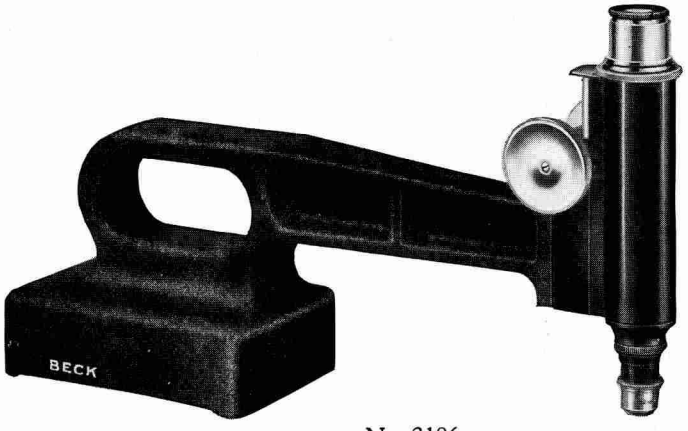

No. 3186.

This microscope was primarily designed for the examination of the etching of process plates. It has, however, been found very suitable for many other purposes, such as the examination of surfaces of a delicate nature, where consequently it would be a disadvantage to stand a microscope upon them. Having an overhang of 7 in., it is possible to examine a surface over a large area. The whole instrument is of rigid design and the base is heavy, to give the necessary stability to support the overhanging body. The microscope is focussed by rack and pinion and has an adjustable draw tube. Any standard object glasses and eyepieces may be employed and micrometers can be fitted in the eyepiece or micrometer eyepieces utilized, if it is required to make measurements.

Stress Measurement Microscope.

No. 2294. **Stress measurement microscope** ... ...

No. 2296. Scale and vernier to rotating motion ... ... extra

No. 2295. Case, hardwood, with lock and key ... ...

This microscope is a special model made for measuring displacement in celluloid models for stress testing, as described in Professor A. J. S. Pippard's book "The Experimental Study of Structures" (Arnold). It is a modification of the No. 3186 and has a filar micrometer eyepiece incorporated into it. The eyepiece has a rotating movement of 10° each way from the normal position for purposes of alignment. A scale and vernier can be fitted to this if required. The object glass employed is a No. 3230, 1½ in. (32 mm.). Other powers can be used if desired.

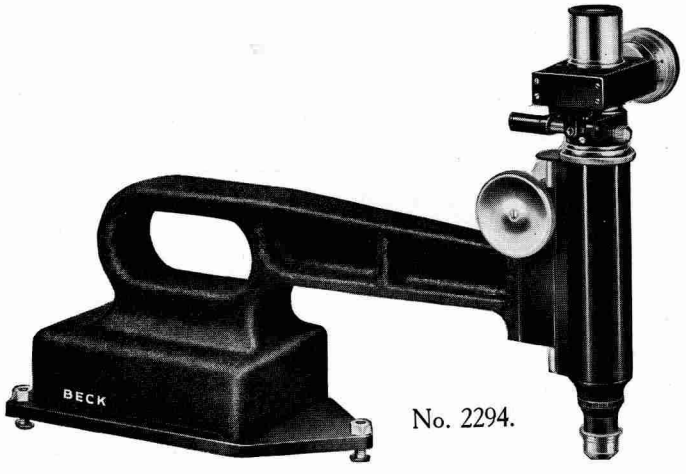

No. 2294.

Bench Microscope.

No. 3195A. **Bench microscope,** with eyepiece and two object glasses giving magnifications at 160 mm. tube length of 25 and 65 ... ...

No. 3195M. **Bench microscope** for measuring, giving magnifying power of 100, each division in eyepiece representing 1/50 mm. ... ...

No. 3224. Case, hardwood, with lock and key ... ...

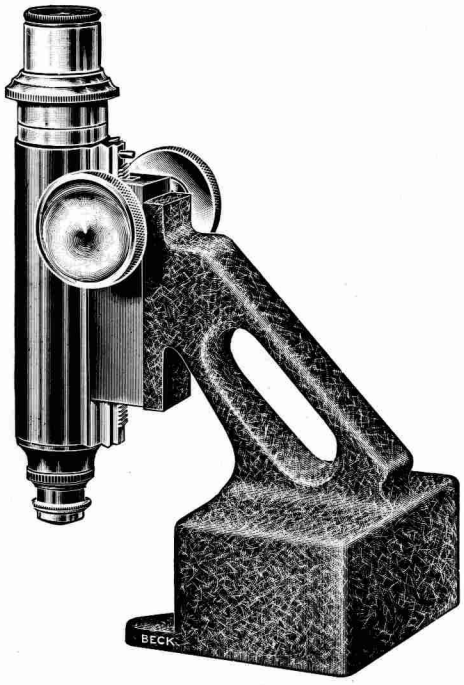

No. 3195A.

This microscope is of general utility for laboratory and industrial purposes where low and medium powers are required. It is suitable for the examination of any unmounted object and, being constructed with the microscope overhanging the base, the size of the object is not limited to small specimens.

This construction also has the advantage that delicate surfaces may be examined without having to place the instrument upon the surface itself. When fitted with a micrometer and calibrated, it forms an excellent microscope for measurement. The focussing is by a smooth working rack and pinion adjustment. A draw tube is provided which enables the instrument to be set to give a definite magnification when needed for measuring. The instrument is of solid construction and is stable and rigid in use.

The illustration shows the instrument approximately half size.

Microscope Units.

No. 2307. **Microscope unit,** without objective or eyepiece ... ...

No. 2308. **Microscope unit** with rack and pinion focussing motion ... ...

In a variety of purposes in laboratories and workshops a microscope unit of simple construction is required for attachment to a piece of apparatus or a machine. No. 2307 is a body tube and drawtube which accommodates any of the standard objectives and eyepieces listed on pages 50, 51 and 54. No. 2308 is similar but is provided with a rack and pinion focussing motion. Micrometer eyepieces can be used for measurement.

The illustrations are approximately half size.

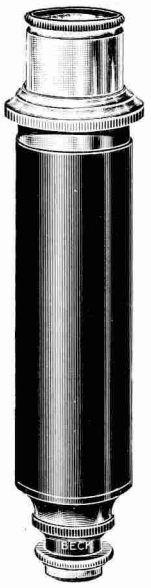

No. 2307.

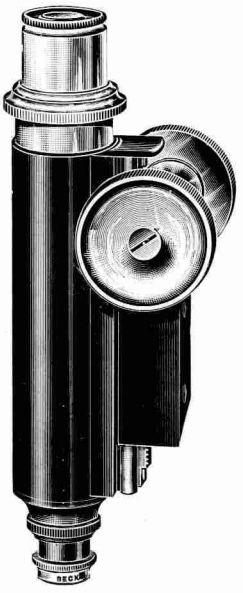

No. 2308.

Nos. 10 and 15 London Microscope.

The No. 10 and No. 15 London microscopes provide an instrument of full size, robust construction, but simple design and consequent economy in cost. These instruments have proved to be very popular for use in schools, where the adjustments and magnifying powers given are sufficient for the more restricted uses to which such instruments are put, and many schools have installed numbers of them at a minimum of expenditure.

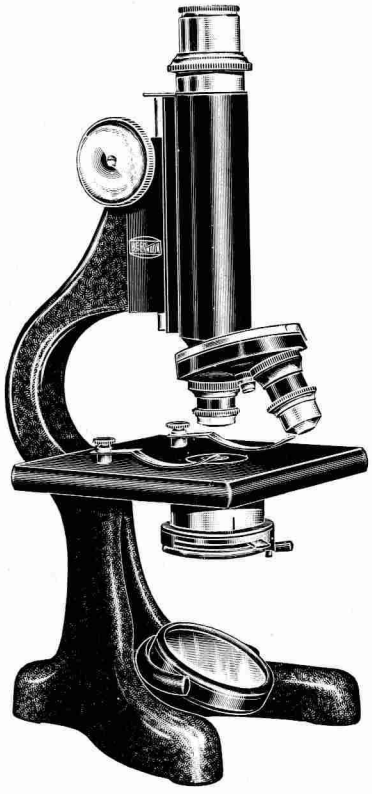

No. 10C.
with Nos. 3310 and 3286

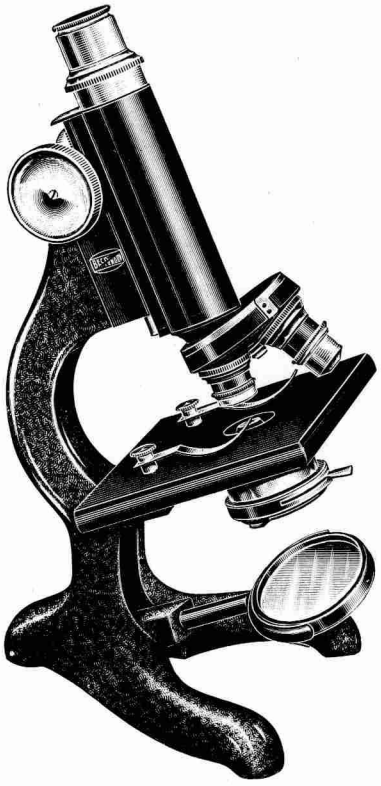

No. 15C.
with Nos. 3310 and 3286

In workshops and industrial establishments they have proved themselves of great service. Here, again, the function which they perform is limited, often to one process, and these instruments are able to fulfil such requirements, and, due to their robust nature, can stand up to the constant use to which they are put. The introduction of the built-in lighting unit, as in Nos. 10 and 15AL, makes the instrument completely self-contained. This is of great convenience, since the microscope can be instantly used in any position where an electric point is available and the lighting is in permanent adjustment.

Nos. 10 and 15 London Microscope.



No. 10 AL.

The general design of the instrument may be seen from the illustrations on pages 43 to 45, which are approximately two-fifths size. The No. 10 is a vertical instrument and the No. 15 has a permanent inclination, otherwise the two models are similar. The latter is convenient in use, but as the stage is necessarily inclined, it is not suitable where liquids in troughs are used, for which purpose the No. 10 is preferable. The focussing adjustment is by means of a specially cut rack and pinion, giving a very smooth motion, free from backlash and capable of accurate focussing with objectives up to and including $\frac{1}{6}$ in. (4 mm.). The base and the handled shaped limb are in one solid casting, making the whole instrument very rigid and free from any flexure. The stage, measuring $4\frac{1}{2}$ in. by $4\frac{3}{8}$ in., is provided with spring clips for holding specimens. The body tube has an extending draw-tube, so that the tube length may be adjusted. It carries the objectives direct in the standard screw thread provided, or will receive a double nosepiece for holding two objectives, which may be revolved. This is shown in the illustrations of No. 10C and No. 15C. The mirror is plane on one side and concave on the other, and is fitted into gimbals for its correct alignment.

A cylindrical substage can be provided for the reception of an iris diaphragm (No. 3308), as in Sets 10E and 15E. This enables the area of the specimen which is illuminated to be restricted and thus avoiding glare. The substage is also used to carry the Abbe condenser (No. 3286), which greatly improves performance when the $\frac{1}{6}$ in. (4 mm.) objective is employed, and is strongly recommended when the higher powers are required.

Objectives and eyepieces are of our standard series and give the following magnifications at the normal tubelength of 160 mm. :—

Nos. 10 and 15 A, E and AL	65–115
Nos. 10 and 15 C and D	65–385

With No. 3230A, $1\frac{1}{2}$ in. (32 mm.) objective, a lower power of $\times 25$ is obtained.

Nos. 10 and 15 London Microscope.



No. 15AL.

In Sets A to E of both models the microscope is illuminated by means of the mirror from an outside source of light. A lighting unit, No. 2983, which is permanently attached to the microscope, enables the instrument to be run direct from the mains on a current of 230 volts. Nos. 10AL and 15AL, illustrated on pages 44 and 45, show the instruments fitted in this manner and the general design of the unit. The lamphouse is soundly constructed, and great care is taken in the ventilation, so that excessive heat is avoided. The whole unit is electrically insulated from the microscope stand and the casing is earthed. The end plate, which is the part most likely to be touched by the hand, is made of a material which is heat resisting and non-conductive.

The illumination is provided by a 25-watt lamp and is even and brilliant. A filter is supplied by means of which the illumination approximates to daylight. It cannot, however, be employed with the substage condenser, and, although the light is sufficiently brilliant, it is not recommended for use with the $\frac{1}{6}$ in. (4 mm.) objective, where the maximum performance is desirable.

The microscopes can be supplied in oak cases with lock and key. Two sizes of case are made, No. 3815A for instruments with the lighting unit, being wider than the No. 3815 for those supplied without. Should it be preferred not to replace the instruments in their cases after use, it is recommended that the No. 3796 cellophane covers be used, as it is essential to keep dust from the working parts of the instruments.

The No. 2983 lighting unit can be supplied as an attachment to existing No. 10 and 15 microscopes, and can be fitted without the necessity of returning the instrument. The unit is held by means of screws in the tapped holes for the attachment of the substage. The necessary screws and instructions for fitting are provided. In the case of existing microscopes fitted with substages, these can be removed and the illuminating unit attached. The mirror of the instrument, which is not required, can be readily detached.

Nos. 10 and 15 London Microscope.

No. 10A & No. 15A. **Stand** ... ...

Nos. 3260/1. 2 Eyepieces, 42 mm. (×6) and 25 mm. (×10) ... ...

No. 3231A. ⅔ in. Object glass, 16 mm., without box ... ...

No. 10E & No. 15E. **Outfit** as Nos. 10A & 15A, with the addition of :—

No. 3310. Cylindrical substage ... ...

No. 3308. Iris diaphragm ... ...

No. 10AL & No. 15AL. **Stand** with self-contained lighting unit No. 2983 ... ...

No. 3260/1. 2 Eyepieces, 42 mm. (×6) and 25 mm. (×10) ... ...

No. 3231A. ⅔ in. Object glass, 16 mm., without box ... ...

No. 10C & No. 15C. **Stand** ... ...

Nos. 3260/1. 2 Eyepieces, 42 mm. (×6) and 25 mm. (×10) ... ...

No. 3231A. ⅔ in. Object glass, 16 mm., without box ... ...

No. 3234A. ⅙ in. Object glass, 4 mm., without box ... ...

No. 3300. Double nosepiece ... ...

No. 10D & No. 15D. **Outfit** as Nos. 10C & 15C, with the addition of :—

No. 3310. Cylindrical substage ... ...

No. 3286. Abbe condenser and iris diaphragm ... ...

No. 2983. Lighting unit for attachment to existing No. 10 and No. 15 microscopes ...

No. 2984. Spare bulbs for 2983... ... ... each

No. 3230A. 1½ in. Object glass, 32 mm., without box ... ...

No. 3815. Oak case with lock and key for Nos. 10 & 15, A, E, C & D ... ...

No. 3815A. Oak case with lock and key for Nos. 10 & 15 AL ... ...

No. 3310. Cylindrical substage ... ...

No. 3308. Iris diaphragm ... ...

No. 3286. Abbe condenser and iris diaphragm ... ...

No. 3796. Cellophane cover ... ...

Crescent Dissecting Microscope.

No. 3020. **Crescent dissecting microscope,** stand only ... ...

No. 3021. Double jointed arm fitted to the above ... ... extra

No. 3022. Case, hardwood, with lock and key ... ...

No. 3021.

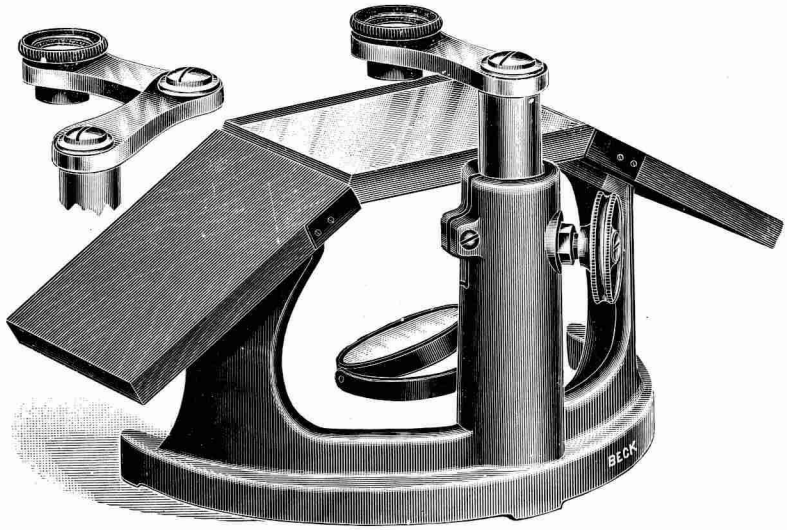

No. 3020 with No. 3171D.

The design and construction of this instrument have been specially considered with a view to perfect stability. The base is a heavy casting on three projecting feet and with two uprights to support the hand rests and stage. The supports are directly under the hand rests, so that weight and pressure upon them have no tendency to tip the instrument. The lenses are carried on a swinging arm focussed by a rack and pinion actuated by a milled head, which is placed at a convenient angle for the hand. The amount of focussing motion is over 3 in. so that material of considerable thickness can be accommodated. The hand rests are of hard wood and the stage is a thick plate of glass. A mirror is provided below the stage, silvered on one side and opal glass on the other. The instrument is supplied with a single swinging arm for holding the lenses or with a double arm which gives greater latitude to the movement of the lens over the stage plate. A hardwood case, with lock and key and carrying handle, can be supplied if desired.

Achromatic Dissecting Magnifiers.

These are suitable for use with the Crescent dissecting microscope described above. They are extremely well corrected combinations giving a flat field of view free from colour defects.

		Mag. power	Dia. of field of view inches	Working distance inches
No. 3171D.	**Achromatic magnifier**	× 5	1.3	1.4
No. 3183D.	„ „	× 8	.9	1.1
No. 3172D.	„ „	×12	.6	.5
No. 3173D.	„ „	×20	.3	.375

Cornex Dissecting Microscope.

No. 33B. Cornex dissecting microscope, stand only ... ...

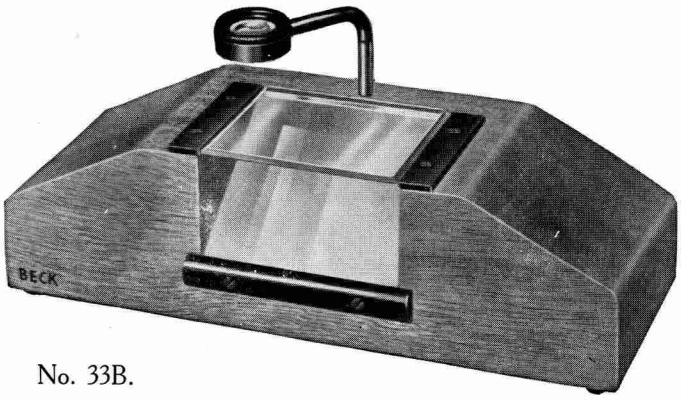

No. 33B.

For class use this dissecting microscope will be found most satisfactory, as although it is of the simplest construction, it is very rigid and strong, and the magnification given is all that is required for ordinary botanical and entomological dissection. For naturalists' work and for such purposes as the recognition of diseases in bees and other insects it will be found equally useful.

The Cornex dissecting microscope is constructed from a solid block of wood and in use will be found very convenient. The sides of the block are cut away at an angle to form rests for the hands. A glass stage is provided upon which to place the objects, illuminated by a mirror set at an angle of 45°.

The magnifiers, as listed below, give excellent definition, together with a large field of view. They are carried in a fitting provided with a focussing motion, and are movable over the stage plate so that objects at different positions can be examined. Recesses, with cover plates, are provided for the accommodation of lenses when not in use.

Dissecting Arm.

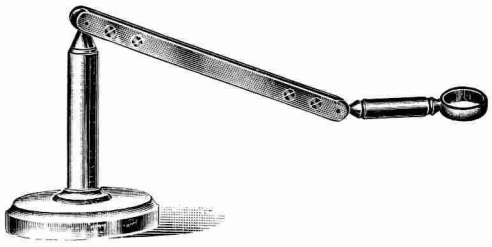

No. 3018.

No. 3018. Jointed dissecting arm ...

This dissecting arm has a firm base and two ball and socket joints, giving it complete adjustments. It has an overhang of 5½in. The magnifiers are of 1 in. diameter, of the simple type listed below, or the achromatic series (page 47) can be employed.

Dissecting Magnifiers.

	Mag. power	Dia. of field of view inches	Working distance inches
No. 3170D. Single lens ...	× 5	1.0	1.5
No. 3168D. Doublet	×10	.6	.9

Object Glasses, Eyepieces and Condensers.

Great strides have been made in recent years in the production of the optical components of the microscope. By the invention of new formulae and by new methods of manufacture, adjustment and testing, we may claim that, in performance they attain a standard of the very highest order.

The usual type of object glass is made in three series, achromatic, apochromatic and fluorite or semi-apochromatic. The achromatic lenses fill the requirements for most purposes and are in general use on account of the fact that they are made to simpler formulae and of less expensive material and consequently are able to be sold at a lower price. The resolution is of a high order and is, in all lenses, as near to the theoretical resolving power as is attainable. The chief feature of the apochromatic series is that the corrections for the chromatic and zonal aberrations are more perfect. In achromatic object glasses, correction is made for two colours of the spectrum, but in apochromatic lenses the correction is made for three colours. For very fine structure undoubtedly apochromatic lenses give superior results ; the perfection of the colour correction enables certain objects to be seen with greater crispness than is possible with achromatic lenses, and higher power eyepieces can be used without breaking down the image. For photography, apochromatics have a decided advantage. In order to obtain these superior corrections a more complicated formula is necessary, involving the use of a greater number of components than in the case of achromatic lenses and the substitution of fluorite for glass in some cases. This increases the cost and accounts for the higher price. In the semi-apochromatic type, in which only one power is made, the corrections very nearly approach the apochromatic series but the use of fluorite is restricted and consequently the price is more moderate. The lens of this series (3.75 mm.) will be found to be most satisfactory for many types of work and is largely used as a substitute for the 2 mm. when the higher power is not necessary but where its larger field of view is an advantage. This objective is made in two forms either for oil or water immersion. In the latter case it can be corrected either for use with a cover glass of standard thickness or for total water immersion. All object glasses, unless otherwise ordered, are corrected for a tube length of 160 mm. Dry object glasses are adjusted for use with a cover glass, .007 in. in thickness, or for uncovered objects.

A complete range of eyepieces is described in the following pages including the Huygenian type which is suitable for general purposes with achromatic object glasses and compensating eyepieces for use with apochromatic and fluorite object glasses. Special types include those with extra wide field and also micrometer eyepieces for measuring. Projection eyepieces are listed for use in photomicrography and also a range of special eyepieces for various purposes. All are of our high standard of accuracy and of the most modern design to suit their particular purpose.

Condensers of various types are available. The Abbe condenser being only partially corrected is not sensitive to centration and is satisfactory where the most critical illumination is unnecessary. The aplanatic type is also not fully corrected but has a larger numerical aperture. The use of an achromatic condenser is essential where the highest resolution is desired and for use with high aperture lenses, particularly with the apochromatic series. Substage condensers are fully described on pages 61 to 63.

Achromatic Object Glasses.

No.	English designation inches.	Focal length. mm.	Numerical aperture.	Approximate magnifying power. With eyepiece. × 6. 42 mm.	× 10. 25 mm.	× 15. 17 mm.
3010b	$2\frac{1}{2}$	60	·07	8	15	20
3011b	2	50	·08	10	20	30
3230a	$1\frac{1}{2}$	32	·12	25	45	65
3230	$1\frac{1}{2}$	32	·15	25	45	65
3238	1	25	·15	40	65	95
3038	1	25	·20	40	65	95
3231a	$\frac{2}{3}$	16	·17	65	115	165
3231	$\frac{2}{3}$	16	·28	65	115	165
3232	$\frac{1}{3}$	8	·54	110	200	285
3239	$\frac{1}{4}$	6	·55	180	300	450
3234a	$\frac{1}{6}$	4	·65	220	385	570
3234	$\frac{1}{6}$	4	·85	275	475	700
***3251**	$\frac{1}{12}$	2	1·00	575	1000	1400
***3235**	$\frac{1}{12}$	2	1·30	575	1000	1400

Achromatic Metallurgical Object Glasses.

These are corrected for uncovered specimens and are "bloomed" to obviate internal reflections when vertical illumination is used and preserve the crispness of the image.

No.	English designation. inches.	Focal length. mm.	Numerical aperture.
3230M	$1\frac{1}{2}$	32	·15
3038M	1	25	·20
3231M	$\frac{2}{3}$	16	·28
3232M	$\frac{1}{3}$	8	·54
3234M	$\frac{1}{6}$	4	·85
***3235M**	$\frac{1}{12}$		1.30

Achromatic Strain-free Petrological Object Glasses.

3230F	$1\frac{1}{2}$	32	·15
3038F	1	25	·20
3231F	$\frac{2}{3}$	16	·28
3232F	$\frac{1}{3}$	8	·54
3239F	$\frac{1}{4}$	6	·55
3234F	$\frac{1}{6}$	4	·85
***3235F**	$\frac{1}{12}$	2	1·30

*Oil immersion. No. 3234a, 4 mm. has a working distance sufficient for use with a hæmacytometer

Special Purpose Object Glasses.

No. 3008. Unit power object glass ... ...

No. 3009. 3 in. focal length object glass ... ...

These object glasses are employed when a large field of view is required. The No. 3008 projects into the body tube and consequently cannot be used with a multiple nosepiece. The N.A. is 0.035 and the working distance 2.5 in. The No. 3009 has a working distance of 6 in. and consequently cannot be employed on the normal microscope stand. Its aperture is N.A. 0.05.

Apochromatic Object Glasses.

No.	English designation. inches.	Focal length. mm.	Numerical aperture.	Approximate magnifying power. With eyepiece. × 6. 45 mm.	× 8. 30 mm.	× 11. 22 mm.	× 17. 15 mm.	× 25. 10 mm.
3240	1½	40	·11	17	27	32	55	85
3241	⅔	16	·35	55	80	100	160	255
3242	⅓	8	·65	115	170	205	345	545
3244	⅙	4	·95	215	320	390	650	1020
‡**3245**	⅙	4	·95	215	320	390	650	1020
*†**3247**	⅛	3	1·20	300	440	525	900	1400
***3248**	1/12	2	1·30	490	720	875	1450	2250

Fluorite Object Glasses.

***3036**	1/7	3·75	·95	230	345	415	700	1110
****3037**	1/7	3·75	·95	230	345	415	700	1110

Apochromatic and Fluorite Metallurgical Object Glasses.

These are corrected for uncovered objects and are " bloomed."

No.	English designation. inches.	Focal length. mm.	Numerical aperture.
3240M	1½	40	·11
3241M	⅔	16	·35
3242M	⅓	8	·65
3244M	⅙	4	·95
*†**3247M**	⅛	3	1·20
***3248M**	1/12	2	1·30
***3036M**	1/7	3·75	·95

* Oil immersion. ** Water immersion. † Including stop to reduce aperture to ·95 N.A. ‡ Provided with correction collar for using cover glasses of different thicknesses.

Apochromatic Strain-free Petrological Object Glasses.

Apochromatic object glasses can be supplied free from strain. Due to their complication the price is 50% above the ordinary type.

Reflecting Objectives.

A special booklet giving full details of these objectives is published and will be sent on application.

These objectives have been produced in conjunction with the Wheatstone Laboratory and Medical Research Council Biophysics Research Unit at King's College, London, and Nos. 4035, 4038, 4039 and 4049 are made under their patent No. 12335. The solid form No. 4047 is made under patents Nos. 680,221/48 and 25782/50.

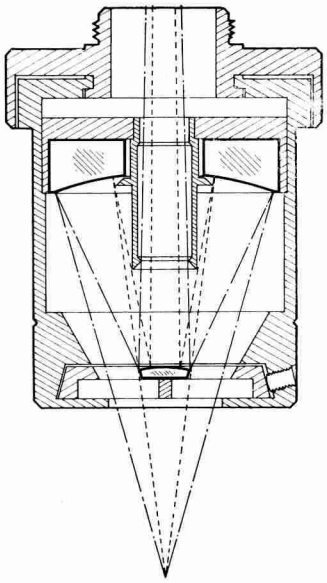

No. 4039.

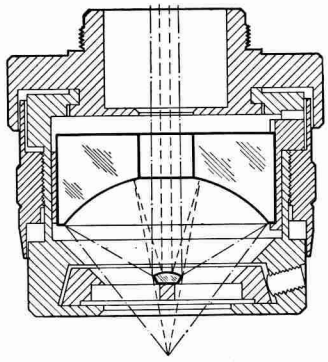

Nos. 4038, 4035, 4049.

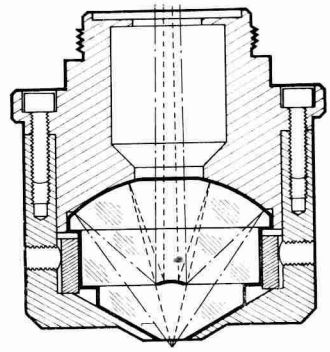

No. 4047.

Reflecting objectives have the following features :—

(*a*) All radiations from the infra-red to the ultra-violet regions of the spectrum are transmitted.

(*b*) Apart from slight chromatic errors introduced by the cover glass which can be corrected by the addition of a suitable lens behind the objective, they are perfectly corrected for chromatic aberration throughout the entire spectral range.

(*c*) They are well corrected for spherical aberration and have a particularly flat field. In number 4035 the aperture of N.A.0.6 is recommended for ultra violet use. The spherical aberration at 2500 Å is approximately one half of the Rayleigh limit.

(*d*) The working distance in the dry lenses is longer than in comparable refracting objectives making them more suitable for use with hot specimens, the 13 mm. focus objective being particularly applicable for such purposes.

In order to achieve the best results of which the objective is capable, critical illumination will be required and this is best achieved by using a second reflecting objective as the condenser. The objectives are fitted with the standard R.M.S. thread.

No.	Focal length. mm.	Magnification at 160 mm tube length	Magnification at 250 mm tube length	Numerical aperture.	Central obstruction of N.A. %	Central obstruction of area. %	Working distance (approx.) at 160 mm. mm.
4039	13	15	—	0.28	42	17.5	24
4049	5.4	36	—	0.5	35	12.5	8
4038	3.5	52	—	0.65	42	17.5	3.5
4035	2.6	74	—	0.65 or 0.6	35	12.5	2.5
4047	1.7	—	172	0.9	35	12.5	immersion

The special microscope stand designed to obtain the full advantages of the use of reflecting objectives will be found illustrated and described on pages 28 and 29.

Newton Long Working Distance Objective.

This consists of an attachment to the standard 8mm. and 4mm. objectives, the mountings of which are modified for the purpose.

In many fields of research, progress has been hampered, due to the difficulty of obtaining the necessary working distance between object glass and specimen. Particularly, this is true when it is desired to observe under microscopical conditions a specimen on which some operation is being performed, or which is at a considerable temperature, or the nature of which demands that, of necessity, it must be viewed through a window.

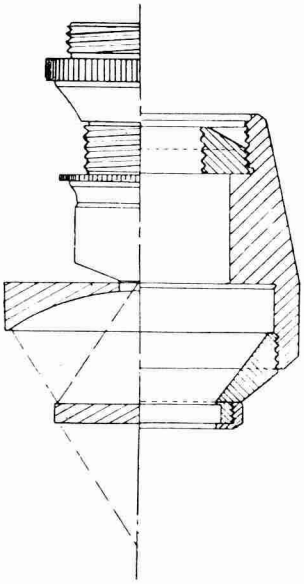

No. 2285.

The attachment consists of an aluminised spherical concave mirror placed at the position where the object is at the centre of curvature, giving unit magnification. At a midway position between this mirror and the object, a semi-aluminised plane mirror reflects the image into the focal plane of the object glass. With each power of object glass the working distance from the front of the attachment to the object is 12.8 mm. but due to the light being incident twice upon the semi-aluminised mirror, there is a considerable decrease in illumination, which can be compensated by an increase in the power of illuminant employed.

The image is reversed by the attachment, neutralising the reversal obtained by the microscope, consequently an upright image is produced, which is advantageous for dissecting and similar purposes.

The optical corrections of the objective are unimpaired, the mirrors being arranged to eliminate axial spherical errors and the effect upon resolution is very small.

The length of the attachment including the objective is 1.7 in. and the maximum diameter 1.6 in., consequently no difficulty arises in using it on a normal microscope. To reduce the weight to a minimum the mounting is manufactured in aluminium alloy.

Due to the construction of this objective it is not suitable for vertical illumination.

No.	Focal length mm.	Magnification	Numerical aperture	Working distance mm.	
2285	8	× 20	0.574	12.8	
2286	4	× 40	0.574	12.8	

Nosepiece Diaphragms.

No. 3358. Nosepiece iris diaphragm ... ...

No. 3482. Pinhole diaphragm for centring, in mount with standard R.M.S. object glass thread ... ...



No. 3358.

The iris diaphragm, also known as a Davis shutter, fits above the objective for reducing its aperture. It has two threads, one of which screws into the nosepiece of the microscope, the other of which receives the objective. The pinhole diaphragm is employed for arranging the light reflected from the substage mirror axially before the objectives are attached.

Microscope Eyepieces.

All eyepieces are made to fit easily into the Royal Microscopical Society's No. 1 Standard, ·917 in. diameter. They are designated by their focal length, and their magnifying power is given for the distance of distinct vision 250 mm., and is engraved on each eyepiece.

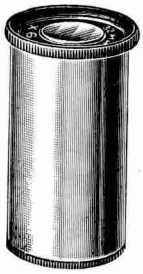

No. 3260.

Huygenian eyepieces.

	Focal length.	Magnifying power.
No. 3688.	50 mm.	× 5
No. 3260.	42 „	× 6
No. 3689.	30 „	× 8
No. 3261.	25 „	×10
No. 3262.	17 „	×15
No. 3097.	12.5 „	×20
No. 3798.	10 „	×25
No. 3263.	25 „ with indicator	×10
No. 3264.	Eyepieces Nos. 3260, 3261 or 3262, with cross lines	

Micrometer eyepieces. These are fitted with micrometer scales, with 100 divisions reading to .1 mm., and are provided with a focussing top lens.

	Focal length.	Magnifying power.
No. 3684.	42 mm.	× 6
No. 3687.	25 „	× 10

Compensating eyepieces. These eyepieces are specially corrected for use with apochromatic object glasses and should always be used with them to obtain full advantage of their corrections.

	Focal length.	Magnifying power.
No. 3266.	45 mm.	× 6
No. 3267.	30 „	× 8
No. 3268.	22 „	×11
No. 3269.	15 „	×17
No. 3270.	10 „	×25
No. 3271.	5 „	×50

Projection eyepieces. These are specially corrected for photomicrography and projection and give a flatter field than the Huygenian and compensating eyepieces.

	Focal length.	Magnifying power.
No. 3787.	25 mm.	×10
No. 3788.	12.5 „	×20

Ramsden eyepieces. These eyepieces are of the positive type.

	Focal length.	Magnifying power.
No. 3503.	25 mm.	×10
No. 3502.	17 „	×15

Wide field eyepieces. These eyepieces give a field of view about 40% larger than either the Huygenian or compensating eyepieces and are especially useful for searching. They also have an advantage for those who use spectacles in that the eyepoint is further from the upper lens.

	Focal length.	Magnifying power.
No. 3773.	25 mm.	×10
No. 3774.	21 „	×12
No. 3775.	17 „	×15

Microscope Eyepieces.

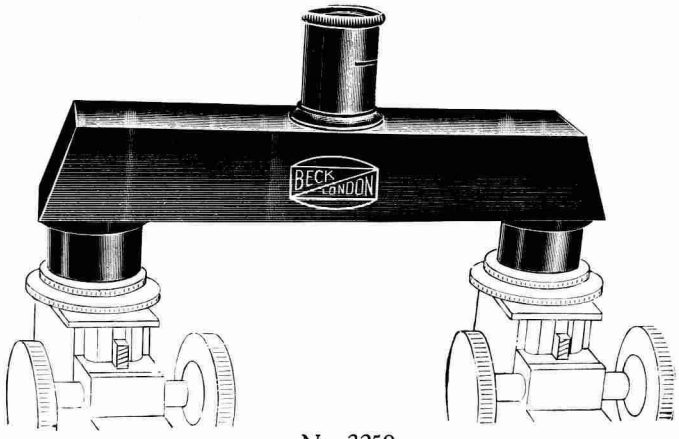

No. 3259.

No. 3259. Comparator eyepiece in wooden case ... ...

This eyepiece is for use with two microscopes, giving in one eyepiece, the images in each microscope combined into one field of view for comparison purposes. It is used without eyepieces in the microscope and has itself an eyepiece ×8. The power is raised by 60% on account of the extra tube length. The distance between centres is 6 in. The tubes for fitting on the drawtubes of the microscopes are made to fit the standard size 1.05 in., but can be adapted for smaller sizes.

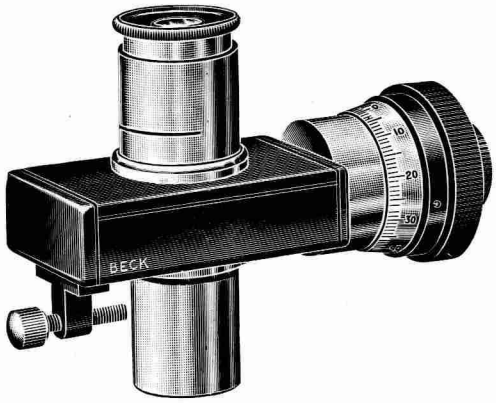

No. 3276A.

No. 3276A. Filar micrometer eyepiece in case ...

This eyepiece is for the purpose of making measurements of objects under the microscope with great accuracy. The readings represent the size magnified by the power of the objective. It consists of a positive eyepiece, ×10, which has in its focus a fixed scale and a moving line which is travelled across the field by a micrometer screw. To the screw is attached a graduated drum by which the readings are made. The drum has 100 divisions each representing .01 mm. Each division on the scale in the eyepiece corresponds to a complete turn of the drum.

No. 3779. Angular eyepiece attachment, without eyepiece, for use with any standard (.917 in.) eyepiece ... ...

When it is necessary to use a microscope vertically, the observer may find that his position gives considerable discomfort. The angular eyepiece bends the path of light so that the eyepiece projects from the microscope at a convenient angle for observation. It will accommodate any power of eyepiece of the standard gauge (.917 in.) and has a lens to adjust the correction of the object glass for the increased tube length, which however increases the magnification approximately 2½ times.

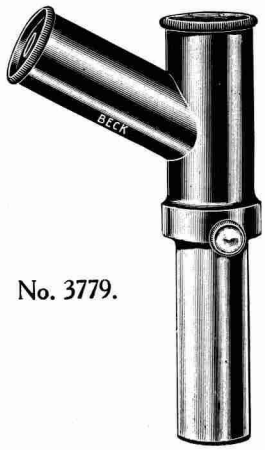

No. 3779.

Microscope Eyepieces.

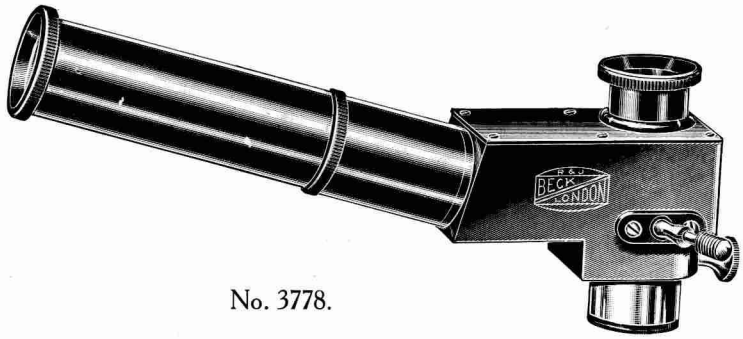

No. 3778.

No. 3778. Double demonstration eyepiece in case ... ...

In instructional work, an observer using a microscope, frequently desires to show the object under examination to a second person and point out some feature which he wishes to demonstrate. This is difficult with the ordinary microscope, but with the double demonstration eyepiece two persons can observe an object at the same time. A movable pointer is provided which is visible in both fields, so that any particular part of the specimen can be indicated. The great assistance which this piece of apparatus can render in teaching can be readily realised. The magnifying power of each eyepiece is ×8.

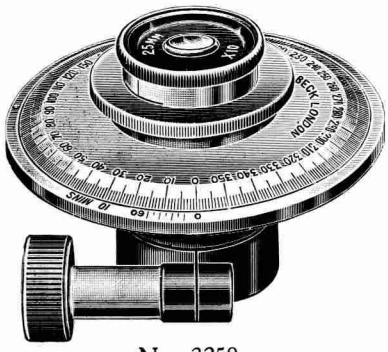

No. 3258.

No. 3258. Goniometer eyepiece in case ... ...

This eyepiece is for the measurement of angles in objects under the microscope. It is made to fit over the standard size drawtube 1.05 in. and is secured in position by a clamp. It comprises a rotating fitting with cross line, which reads by means of a divided circle, 2½ in. diameter, graduated in degrees, with a vernier reading to 10 minutes. The eyepiece has a power of 10.

It can be adapted for microscopes with drawtubes of a smaller outside diameter at a small extra cost. This dimension should be stated when ordering.

No. 3419. Eyepiece pinhole ... ...

This consists of a plate with a central pinhole mounted similarly to an eyepiece and is of assistance for centration. It is of the standard size, .917 in. diameter.

No. 3256. Erlich eyepiece ... ...

This eyepiece is for the measurement of areas and for use in blood counting. It consists of an eyepiece having an adjustable square diaphragm which can be varied in size from 1 mm. to 6 mm. It is made to the standard diameter of .917 in.

Stage and Eyepiece Micrometers.

No. 3277. **Stage micrometer** on 3×1 slide, engraved .1 and .01 mm. ... ...
No. 3278. **Stage micrometer** on 3×1 slide, engraved .01 and .001 in. ... ...
No. 3806. **Stage micrometer,** opaque, on 3×1 slide, engraved .01 and .001 in. ...
No. 3807. **Stage micrometer,** opaque on 3×1 slide, engraved .1 and .01 mm. ...
No. 3276. **Eyepiece micrometer,** scale 5 mm., divided into 50 parts ... ...
No. 3810. **Eyepiece micrometer,** scale 10 mm., divided into 100 parts ... ...
No. 3811. **Eyepiece micrometer,** scale 10 mm., divided into 100 parts and crosslines ...
No. 3812. **Step eyepiece micrometer** ... ...
No. 3279. **Eyepiece plate** ruled in squares, $\frac{1}{4}$ mm., $\frac{1}{2}$ mm., or 1 mm. ... ...
No. 3808. **Eyepiece plate,** Patterson globe and circle
No. 3809. **Eyepiece plate,** C.R.E. type ... ...

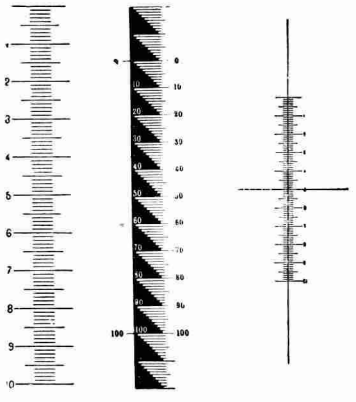

No. 3810. No. 3812. No. 3811.

These micrometers are for the purpose of making accurate measurements of objects under examination in the microscope. On account of the magnification used, the resulting measurements are of great accuracy. The method consists of the use of a micrometer in the eyepiece, the value of the divisions of which may be ascertained by reference to the divisions of a second micrometer placed upon the stage. The stage micrometer is then replaced by the object which it is desired to measure and the number of divisions occupied by it in the eyepiece micrometer give the actual size. The process can be greatly simplified by adjusting the magnifying power of the microscope by means of the extending drawtube, so that an exact number of divisions in the eyepiece micrometer correspond to a division in the stage micrometer, when a direct reading can be made.

Nos. 3277 and 3278 are ruled on a 3 in. × 1 in. glass slide and mounted with a cover glass. No. 3277 has ten divisions each being .1 mm., one division at the end of the scale being again divided into ten giving .01 mm. No. 3278 has ten divisions of .01 in. with one divided again into ten giving .001 in. Nos. 3806 and 3807 are divided in a similar manner to Nos. 3277 and 3278, but are ruled on an aluminized surface, uncovered, for use with opaque illumination. The eyepiece micrometers are on glass discs to fit on to the stop in Huygenian eyepieces or in the cells provided for them in positive eyepieces. The standard size is 21 mm., but special sizes can be supplied to order at a slightly increased price. The Nos. 3808 and 3809 are special rulings for use in counting and measuring dust particles.

We are manufacturers of many types of graticule for special purposes and shall be pleased to furnish quotations for requirements of this nature.

Eyepiece Crossline.

No. 3265. **Eyepiece plate,** ruled with crosslines ... ...

This is a glass disc made similarly to an eyepiece micrometer but with plain crosslines ruled upon it.

High Power Binocular Eyepiece.

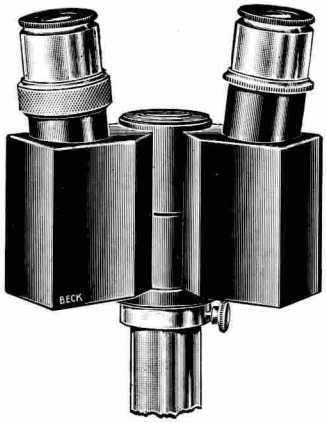

No. 3780. Straight model.

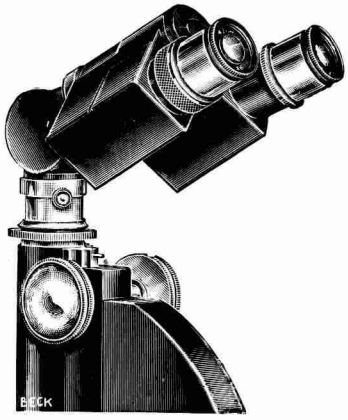

No. 3781. Inclined model.

No. 3780. High power binocular, straight model (without eyepieces), in case ... ...

No. 3781. High power binocular, inclined model (without eyepieces), in case ... ...

No. 3260b. Huygenian eyepieces, ×6 (42 mm.), with long eyepoint (eye relief) ... per pair

No. 3261. Huygenian eyepieces, ×10 (25 mm.) ... ... „ „

The binocular eyepiece converts a monocular microscope into a thoroughly efficient binocular instrument. It has all the qualities of the binocular bodies which are built into microscopes. It can be used in conjunction with objectives of all powers. As the full aperture of the object glass is used in each eye, the resolution is unimpaired. A corrector is supplied to compensate for the increased optical path, there being, however a resulting increase in magnifying power of approximately 15%. The two tubes of the binocular are set in relation to each other at the normal convergence for near objects. The interocular distance is variable from 47 to 78 millimetres, and is adjusted by turning the two tubes on a common centre, the tubelength remaining unaltered.

The high power binocular attachment is made in two forms, No. 3780 being the straight model and No. 3781 the inclined model. The model No. 3781 is for use with the microscope in a vertical position, necessary when fluids are examined. The eyepieces are inclined at an angle of 30° from the horizontal, which will be found to be a convenient position for observation.

The model No. 3780 is suitable where the microscope is used at an inclined position.

The binocular eyepiece is made for use with microscopes both of our own and of other makers. It is advisable for us to have the drawtube of the instrument to ensure that there are no obstructions, which would prevent its insertion.

For use with these attachments we have introduced a ×6 eyepiece, which has a specially long eyepoint (eye relief) and due to the extra comfort afforded in use, we advise the selection of this type in preference to the ordinary ×6 Huygenian eyepieces.

Polarising Apparatus.

No 2373 **Substage polariser** ... ...
No. 2374. Selenite for No 2373 ... ...
No. 2375 **Eyepiece analyser** ... ...
No. 2376. **Nosepiece analyser** ... ...
No. 2377. **Nosepiece analyser,** with selenite ... ...
No. 2384. **Polaroid** for tray of condenser ... ...
No. 2385. **Selenite** for tray of condenser ... ...



No. 2373/4.



No. 2375.


No. 2376.

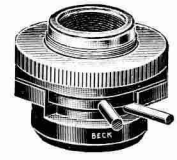

No. 2377.

This apparatus is for the examination of objects under polarised light and is suitable for attachment to any standard microscope. It consists of two parts, a polariser and an analyser, each carrying a disc of " Polaroid ". The polariser No. 2373 fits into the substage and is made to fit the R.M.S. standard size of 1.52 in. or can be supplied with a quick-change grooved ring for our No. 47 and 48 microscopes. It has a rotating adjustment and a selenite can be fitted if desired. Several types of analyser are available. No. 2375 is used above the eyepiece and fits on to the top of the standard size drawtube (1.05 in.). It has a revolving motion operated by the milled ring at the top of the fitting. Nos. 2376 and 2377 are used immediately above the objective, being provided with standard R.M.S. threads, both for attachment to the body tube and for the reception of the objective. No. 2376 is a simple fitting with rotating motion. No. 2377 is more complete, having a rotation of 90° by means of an operating handle and having a wave plate mounted with it also rotatable in the same manner. Both are readily removable from the fitting, which may, therefore, remain on the microscope when the analyser is not in use.

For use in the swing out tray of the substage condenser, a Polaroid in a metal cell can be supplied, in conjunction with which a selenite can also be used.

Wedges, Wave-Plates, etc.

No. 3351A. Quartz wedge, 20 orders... ... ...
No. 3351. „ „ 6 „ ... ...
No. 3350A. Dr. Evans double quartz wedge ... ...
No. 3350. Quartz wedge on gypsum plate... ... ...
No. 3059. Kleins quartz plate ... ...
No. 3997. Gypsum plate of 1st. order ... ...
No. 3998. Mica 1/4 wave plate ... ...

These petrological accessories are mounted centrally on metal slides to fit a slot .52 in. in width and .17 in. in thickness. The slide is 3 in. in length.

Drawing Apparatus.

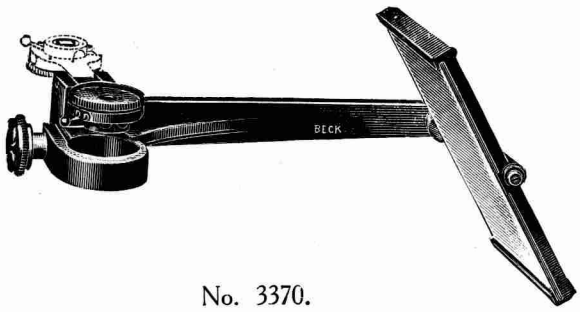

No. 3370.

No. 3370. Abbe camera lucida in case ... ...

This apparatus is made for the production of correct drawings of images seen through the microscope. It consists of a prism mounted to fit over the eyepiece of the microscope and a large mirror placed a few inches from it. The prism is silvered but has a small clear aperture in its centre. The paper upon which the drawing is made is reflected by the mirror into the prism and in turn by the silvered surface of the prism into the eye. At the same time the object is seen through the clear aperture in the prism. Thus the object is seen superimposed upon the paper and can be readily drawn. This Abbe camera lucida is of rigid design and is made of a light metal, so that the total weight is 7 oz. The fitting carrying the prism is hinged and can therefore be readily turned aside when not desired for use, or for changing eyepieces. A series of neutral tint glasses for equalising the light in the two fields is mounted in a revolving fitting. The microscope should preferably be used vertically, but if inclined, the drawing paper must be set in the same plane as the stage.

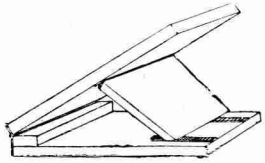

No. 3375.

No. 3375. Drawing table, adjustable for angle, for use with camera lucida, size 9 in. × 9 in. ...

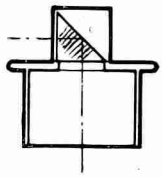

No. 3662.

No. 3662. Right angle prism ... ...

This is mounted for use over the eyepiece for projection or drawing. It is made to fit on the outside of the drawtube, to the R.M.S. standard size 1.05 in.

Focussing Magnifiers.

No. 2271. Angular focussing magnifier ... ...

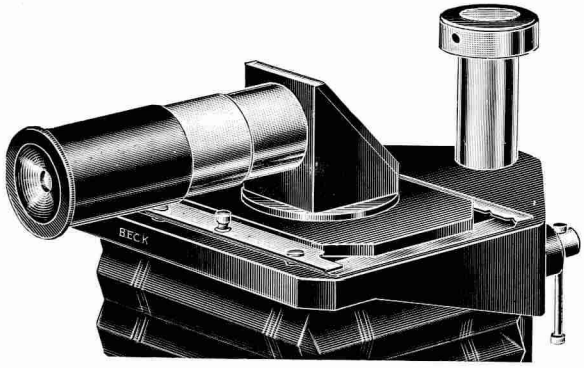

No. 2271.

In focussing the image on the ground glass of a photo-micrographic camera, it is found that the grain of the screen affects the definition of fine structures and makes precise focussing difficult. The No. 2271 magnifier replaces the focussing screen and is fitted with a cross line in the exact register of the photographic plate. The magnifier is first set to focus this cross line and the microscope then adjusted until the image of the object is seen to be in critically sharp focus. This attachment is for use with the No. 2259 vertical $\frac{1}{4}$-plate camera or the No. 50 Universal microscope. For convenience, the eyepiece of the magnifier projects horizontally.

No. 2272. Focussing magnifier ... ...

This is a simple magnifier for examining the image on the ground glass of the camera and is of great advantage in obtaining a critical focus. It has a setting adjustment, with clamping ring.

Substage Condensers.

The selection of the substage condenser to be utilized on the microscope is a matter of the highest importance. Unless a suitable condenser is employed the advantages of high aperture and highly corrected objectives, such as the apochromatic series, will be lost. On the other hand an instrument intended for lower power and more simple work need only have one of the rather less highly corrected condensers which are more economical in price. The various types of condensers here described possess different characteristics but are of the highest quality of their type both as regards their optical properties and manufacture.

The Abbe condenser No. 3286 is a simple type consisting of two lenses. It is partially corrected and is the condenser which is usually supplied with routine microscopes where apochromatic objectives are not used and where the highest magnifying powers are unnecessary. It is not sensitive to centration and may therefore be used without a centring substage. It has an N.A. of .95 which is the largest aperture which can be transmitted by a dry condenser.



No. 3286.

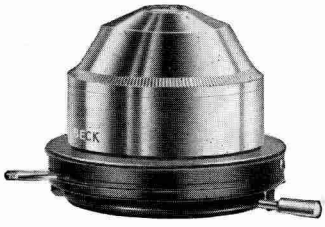

No. 3220.

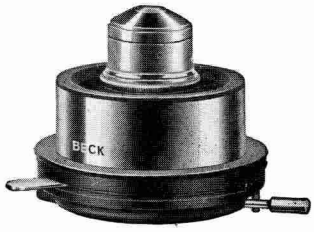

No. 3288.

The aplanatic condenser No. 3220 has an aperture of N.A. 1.4 in immersion or N.A. .95 when used dry. It has a focus of .24 in. and a working distance clear of a 1 mm. slide of .025 in. in air or .042 in. in oil. It is a three lens combination and its corrections are superior to those of the Abbe condenser. It is not corrected for achromatism, but is quite suitable for general purposes.

The dry achromatic condenser No. 3288 is a highly corrected system and is suitable for use with high powers of the achromatic, apochromatic and fluorite series. It has the same order of corrections as an object glass and is capable of the most critical work. It has an aperture of N.A. .95, a focus of .30 in. and a working distance clear of a 1 mm. slide of .008 in. It is constructed so that the top lens can be removed leaving a condenser suitable for use with medium powers, with a numerical aperture of .44, a focus of .56 in., and a working distance of .255 in. This condenser must be used in conjunction with a centring substage as its accurate centration is essential.

The dry achromatic condenser No. 3645 has similar properties to No. 3288 but is made to a longer focus and has larger lenses. It consequently illuminates a larger field and thus, although suitable for use with the high powers, has an advantage when used with the medium powers, as it will give a fully illuminated field while still utilising the full aperture of the condenser. It has an aperture of N.A. .95, a focus of .57in. and a working distance clear of a 1 mm. slide of .027 in. This also is made with the front lens removable, leaving a condenser of N.A. .45 with a focus of 1.15 in. and a working distance of .5 in. A centring adjustment to the substage is essential for this condenser.

The dry and immersion achromatic and aplanatic condenser No. 3291 is a fully corrected system and suitable for the highest power work with all types of objective. It has an aperture in immersion of N.A. 1.3 and its focus is .27 in. with a working distance clear of a 1 mm. slide of .01 in. The top combination of lenses may be removed giving a condenser of N.A. .7 with a focus of .55 in. and a working distance in air of .2 in. A further combination may also be removed leaving a low power condenser of N.A. .3, a focus of 1.15 in. and a working distance of .8 in. A centring adjustment to the substage is essential for this condenser.

A condenser No. 3649 is also available for use with low powers up to the 16 mm. It is a combination of lenses which when complete gives N.A. .15 and is suitable for use with the 32 mm. With the top lens removed the aperture becomes N.A. .3 for use with the 16 mm. objective.



No. 3645.

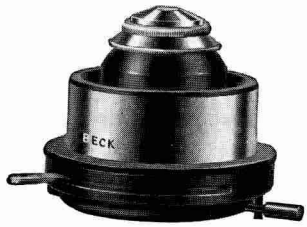

No. 3291.

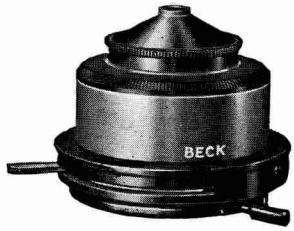

No. 3649.

The No. 3666 is a four lens aplanatic condenser, made in quartz, for transmitting light from an ultra-violet source. This is suitable for investigations with light in this region of the spectrum and for fluorescence work. It has an aperture of N.A. 1.25 and is used in water immersion.

All condensers are mounted to fit the R.M.S. standard substage size of 1.52 in. If ordered separately, the microscope on which they are to be used should be specified. If for a make other than our own, the height from the under-side of the substage tube to the top surface of the stage, when the substage is racked up to its highest position, should be given, so that the condenser may be supplied of the correct height. For the quick change substage on our No. 47 and 48 microscopes, a grooved ring is supplied which fits over the 1.52 in. fitting and is held in position by a clamp screw. All condensers are fitted with an iris diaphragm and a tray for the reception of a ground glass, colour filter, polaroid screen, or patch stops. Two screens are provided with each condenser, one of ground and the other of blue-green glass.

No. 3286. Abbe condenser ... ...
No. 3220. Aplanatic condenser, N.A. 1.4 ... ...
No. 3288. Achromatic condenser, dry N.A. .95 ... ...
No. 3645. Achromatic condenser, dry, N.A. .95 ... ...
No. 3291. Achromatic and aplanatic condenser, dry and immersion, N.A. 1.3 ... ...
No. 3649. Low power condenser ... ...
No. 3666. Quartz substage condenser ... ...

Patch Stops.

Sets of stops are supplied consisting of three sizes of obscuring patches. These fit the tray provided on the condensers. They will be found to give reasonably good dark field illumination with the lower powers.

No. 3286P. Set of 3 patch stops for No. 3286 ... ...
No. 3220P. Set of 3 patch stops for No. 3220 ... ...
No. 3288P. Set of 3 patch stops for No. 3288 ... ...
No. 3645P. Set of 3 patch stops for No. 3645 ... ...
No. 3291P. Set of 3 patch stops for No. 3291 ... ...

Dark Ground Illuminators.

No. 3293. Focussing dark ground illuminator, in plain substage fitting ... ...

No. 3294. As No. 3293, in centring substage fitting ... ...

No. 3296. High power dark ground illuminator, in plain substage fitting ... ...

No. 3297. As No. 3296, in centring substage fitting ... ...

Many objects which reflect light are very satisfactorily shown by dark ground illumination, when they appear brilliantly illuminated against a black background. To obtain this form of illumination the light which shines upon the object must not directly enter the microscope, but only that reflected or scattered by the object itself, so that it shines as if it were self luminous. In dark ground illumination the light must be focussed to one definite position coinciding with the object. As the illuminator must be in immersion contact with the lower surface of the slide, a fixed focus dark ground illuminator can only be used with slides of a given thickness for which the illuminator has been made.

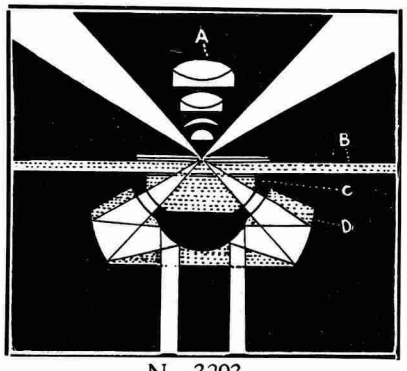

No. 3293.

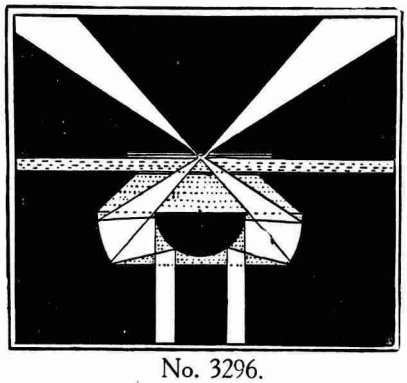

No. 3296.

The No. 3293 focussing dark ground illuminator can be accurately focussed for slides of any thickness from $\frac{1}{2}$ mm. to $1\frac{1}{2}$ mm. The thickness of the slide upon which specimens are mounted is immaterial, provided it is between the above stated limits. The optical portion consists of two lenses, the lower one being movable, adjusting the illuminator for any thickness of slide between $\frac{1}{2}$ mm. and $1\frac{1}{2}$ mm. When used on slides from 1 mm. to $1\frac{1}{2}$ mm. the cone of light which is transmitted is between N.A. 1.0 and N.A. 1.37 which enables any object glass with an aperture not higher than N.A. .95 to be employed. If however a slide is used that is not thicker than $\frac{1}{2}$ mm. the angle of the cone of light is altered to between N.A. 1.25 and N.A. 1.37 and an object glass with an aperture of N.A. 1.2 can be employed. The front lens can be unscrewed and an excellent dark ground illuminator is then formed, which can be used dry, with low powers up to N.A. .7.

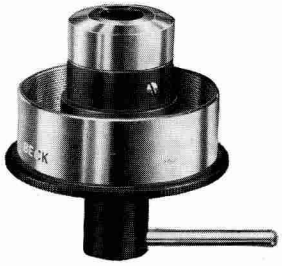

No. 3293.

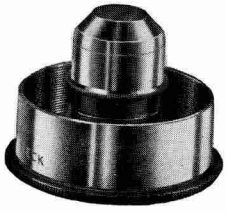

No. 3296.

The No. 3296 high power dark ground illuminator throws upon the object a hollow cone of light between N.A. 1.0 and 1.3. It must be used in immersion contact with the slide and the slide must be 1 mm. thick. It is specially intended for use with object glasses of high power, as it gives a very small but brilliantly illuminated spot of light. Object glasses with an aperture greater than N.A. .95 require to be stopped down by the insertion of a diaphragm behind the back lens.

Substage Illuminator.

No. 2094. Substage illuminator, to fit No. 47 and No. 48 microscope ... ...

No. 2097. Substage illuminator, to fit No. 29 microscope ... ...

No. 2095. Transformer with dimming device for alternating current ... ...

No. 2096. Spare bulbs ... ... each

The No. 2094 substage illuminator is a complete lighting unit, replacing the mirror of the microscope and giving a self-contained illumination, independent of any outside lighting source. Once the illuminator has been attached, the instrument remains ready for instant use, with its illumination permanently adjusted. The illuminator can be used with both substage condensers and dark ground illuminators. The lamp is 3.2 watt 4 volt and gives an intense light. It is run from mains by means of a transformer (for alternating current). A dimming device is provided so that the intensity may be regulated for the various powers in use and class of object under examination. An iris diaphragm restricts the illumination to the field of view being observed, thus avoiding glare from surrounding portions of the field.

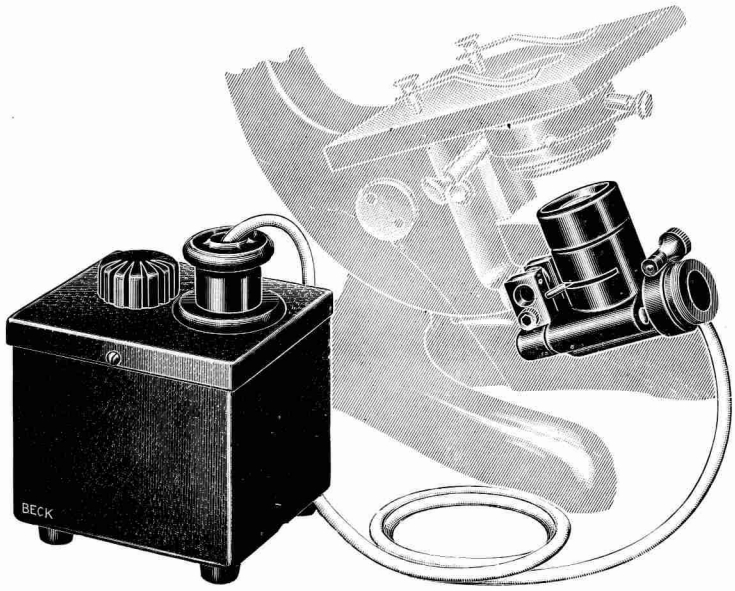

No. 2094/5.

The illuminator can be fitted to any of the No. 47 or No. 48 models, which can be supplied with it in place of the mirror. It can also be supplied to owners of these microscopes for attachment.

The operation of fitting is very simple as the illuminator clamps into the hole at the base of the limb into which the mirror fits. Instructions for correct fitting and adjustment are issued with it. A slightly modified fitting is available for attaching it to our earlier No. 29 microscope.

Phase Contrast Apparatus.

A booklet giving full details of the Beck phase contrast apparatus together with description of its method of use is available and will be sent on application.

The phase contrast method provides a means of observing detail, which would be invisible under other systems of illumination by reason of the lack of contrast between the various parts of the structure. In the case of transparent objects the detail is shown by reason of the slight differences in refractive index, and in the case of opaque objects by small inequalities of level, which cause variation in phase and which are, by ordinary methods, not observable. The phase plate, however, changes these into differences in intensity which are of sufficient contrast to render the structure of the object visible.

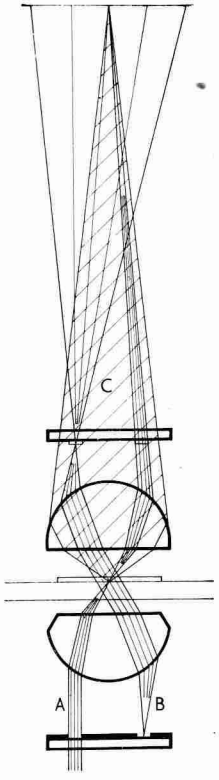

Fig. 1

For transparent objects.

The arrangement of the microscope consists of an annulus placed below the substage condenser and a phase plate in the back focal plane of the objective, as indicated in fig. 1. By means of the annulus which gives a bright ring of light, the object is illuminated by a hollow cone of rays. The object glass forms an image of the annulus in its back focal plane as shown in the diagram by the bundle of rays (B). In this plane, a phase plate is fitted consisting of a disc of glass with an annular ring matching the annulus below the condenser. The thickness of the phase ring changes the phase of the light by $\frac{1}{4}$ wave length. By this means the light passing through the ring, bundle (A), is out of phase with the light scattered or diffracted by the object, shown as bundle (C) in the diagram. By interference of these two bundles, detail is rendered visible to the eye.

The apparatus can be employed on any microscope of standard design preferably with a centring substage. The equipment consists of the following parts :—

(a) Special substage condenser, 14 mm. focus, to fit into substage with standard R.M.S. diameter of 1.52 in. or fitted with quick-change ring to fit No. 47 microscope centring substage.

(b) Centring trays, one for each object glass used, with annulus stop. These are attached to the substage condenser by quick-change method. Each is engraved with the focal length of the object glass with which it is used.

(c) Two keys for adjusting centration of annulus trays and object glass fittings.

(d) Filter to give green light from a white light-source or to filter out the "e" line from mercury vapour lamp.

(e) Observing microscope to fit in place of microscope eyepiece, to view back focal plane of object glass.

(f) Nosepiece pinhole diaphragm for centring.

(g) Case to contain apparatus, allowing a maximum of four substage annulus trays.

No. 1997. Phase contrast apparatus for transparent objects, consisting of condenser, nosepiece changer and keys, light filter, observing microscope and case to contain above with four annulus trays ... ...

Achromatic object glasses in centring fittings with appropriate annulus plates in centring fittings:-

No. 3231P.	$\frac{2}{3}$ in.	16 mm.	N.A. 0.28	... ...
No. 3232P.	$\frac{1}{3}$ in.	8 mm.	N.A. 0.54	... ...
No. 3234P.	$\frac{1}{6}$ in.	4 mm.	N.A. 0.85	... ...
No. 3235P.	$\frac{1}{12}$ in.	2 mm.	N.A. 1.3, oil immersion	... ...
No. 1822.	Case to contain four object glasses in centring fittings			... ...
No. 3482.	Nosepiece pinhole			
No. 2007.	Iris diaphagm for condenser (a), interchangeable with annulus trays.			

Phase Contrast Apparatus.

For opaque objects.

The illustration fig. 2 shows the arrangement of the microscope for phase contrast with opaque specimens, illuminated by incident light. In this case the annulus is held in a centring mount on the vertical illuminator fitting. The annulus is then imaged, after reflection by the specimen, in the back focal plane of the object glass as indicated by the bundle of rays (B) in the diagram. The directly reflected bundle (A) passes through and is retarded by the phase ring and therefore interferes with the scattered bundle (C), enhancing the contrast of the image as seen in the eyepiece. A levelling mirror is provided for the stage, to permit the annulus image to be accurately centred with respect to the phase plate in the back focal plane of the object glass. A second levelling table on which the object can be mounted is also provided, so as to ensure that the phase condition is maintained.

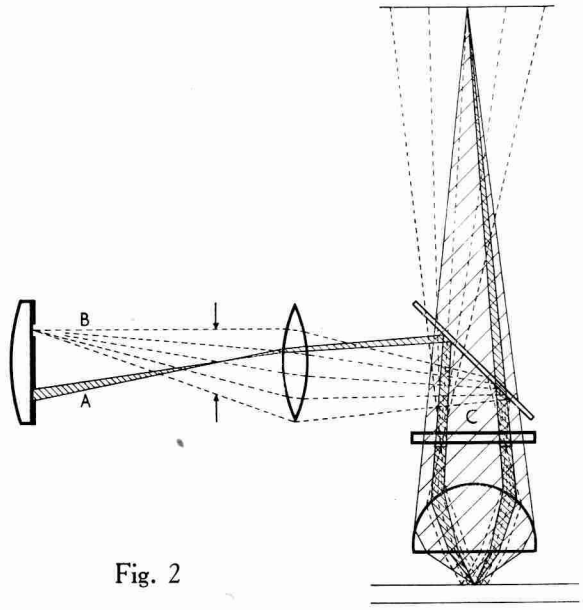

Fig. 2

A different annulus for each phased objective is required and these are held in separate centring mounts with quick change fitments. The range of objectives is as given for use with transparent objects, but for opaque work they are corrected for uncovered objects and the surfaces are bloomed.

No. 2013/4VP. Vertiphase illuminator, with thin glass reflector, nosepiece changer and keys, observing microscope, two levelling stages, light filter, in case to contain above and four object glasses. ... ...

No. 2016. Spare thin glass reflector. ... ...

Achromatic object glasses in centring fittings and appropriate annulus plates in centring fittings:-

No. 3231VP.	$\frac{2}{3}$ in.	16mm.	N.A. 0.28	... ...
No. 3232VP.	$\frac{1}{3}$ in.	8mm.	N.A. 0.54	... ...
No. 3234VP.	$\frac{1}{6}$ in.	4mm.	N.A. 0.85	... ...
No. 3235VP.	$\frac{1}{12}$ in.	2mm.	N.A. 1.3, oil immersion.	... ...

Phase Contrast Microscope.

(for transparent objects)

This microscope is a Model 47L as described on pages 4, 5, 10 and 11, with a special substage for the convenient use of the phase contrast illuminating apparatus as described on page 65. It is fitted with the complete apparatus, No. 1997, four object glasses and two eyepieces, × 6 and × 10. The microscope is suitable for ordinary work with transmitted light, the iris diaphragm (No. 2007, page 65) being supplied for attachment to the condenser.

No. 2281. Phase contrast microscope, in case ... ...

Microscopes for phase contrast illumination of opaque objects, vary greatly for particular classes of work. On receipt of a specification of the requirements we shall be pleased to make suggestions and quote prices.

Beck-Chapman Opaque Illuminator.

No. 2340. Beck-Chapman illuminator, with green and ground glass screens, in case
No. 2341. $1\frac{1}{2}$ in. Object glass, 32 mm. with reflector ... ...
No. 2342. $\frac{2}{3}$ in. Object glass, 16 mm. with reflector ... ...
No. 2343. $\frac{1}{3}$ in. Object glass, 8 mm. with reflector ... ...
No. 2344. $\frac{1}{6}$ in. Object glass, 4 mm. with reflector ... ...
No. 2159. Resistance for use with 100–250 volts D.C. ... ...
No. 2160. Transformer with dimming device for alternating current ... ...
No. 2161. Spare bulbs ... ... each

For critical illumination of opaque objects, i.e., surface structures, glazes, tissues, seeds, grains, powders, metals and similar objects, the Beck-Chapman illuminator is unsurpassed. The area of the object is unrestricted and the self-contained light source simplifies adjustments where objects of varying thicknesses are being examined. In the image obtained when examining polished metal surfaces, the reverse appearance to that obtained with vertical illumination is given and, in metallurgical work, the dark ground effect is obtained.

The construction of this illuminator is shown in in figure 3. The light from an electric bulb (A) is directed from the side, into the microscope, through a condensing lens (B), upon a mirror (C) placed above the object glass (D). The mirror has an aperture in the centre. The mirror throws an annular ring of light upon metal reflectors (E, E′ and E″),which surround the object glass and concentrate the light upon the focal plane of the object glass giving a brilliant illumination upon any object or surface being examined. The light falls upon the object in the form of a hollow cone, so that no direct light enters the microscope and the object is rendered visible by scattered light. This method eliminates reflections and does not produce glare and haze in the image.

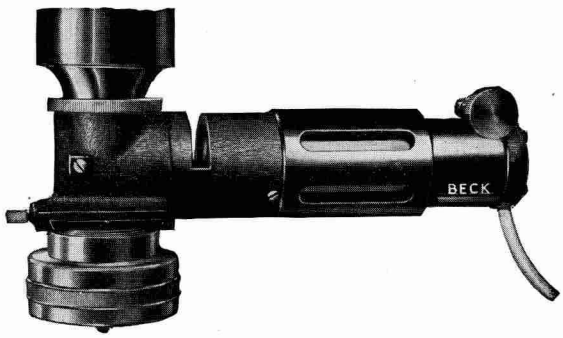

No. 2340.

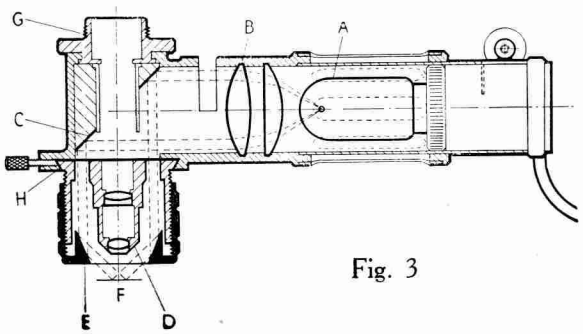

Fig. 3

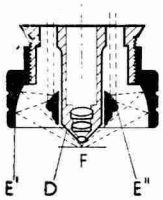

The illumination is by an intense light source, 6 volts 15 watt, with condensing lens, in a well ventilated lamp-house. This lamp may be used with batteries, accumulators or with suitable resistance or transformer, from the mains. The mount of the illuminator, with its angular mirror, lamp-house and condenser, screws into the microscope by means of a revolving fitting (G). Its lower portion has a dovetailed slide (H) into which the various object glasses, with their reflectors are fitted. Object glasses $1\frac{1}{2}$ in. (32 mm.), $\frac{2}{3}$ in. (16 mm.), $\frac{1}{3}$ in. (8 mm.) and $\frac{1}{6}$ in. (4 mm.) are available for use with this illuminator. The construction of the reflectors is varied according to the magnifying power of the object glass, so that either a larger or smaller field of view is illuminated. Fig. 3 shows the two different forms.

Wrighton-Beck Metallurgical Illuminator.

No. 1193. Wrighton-Beck metallurgical illuminator ... ...

No. 2159. Resistance for use with 100 to 250 volts D.C. ... ...

No. 2160. Transformer with dimming device for alternating current ... ...

No. 2161. Spare bulbs ... ... each

The Wrighton-Beck vertical illuminator applies the latest method of metallurgical illumination in a compact piece of apparatus which can be attached to any microscope. This illuminator renders any ordinary microscope suitable for metallurgy, as the illuminant and the whole train of lenses and diaphragms move with the body. It obviates the necessity for the focussing stage usual on metallurgical microscopes, except for the accommodation of specimens of considerable variation in thickness. The apparatus contains its own illuminating source and the necessary lenses and diaphragms to give complete control of the light. The illustration on page 26 shows the illuminator as fitted to the microscope, fig. 4 shows diagrammatically its construction.

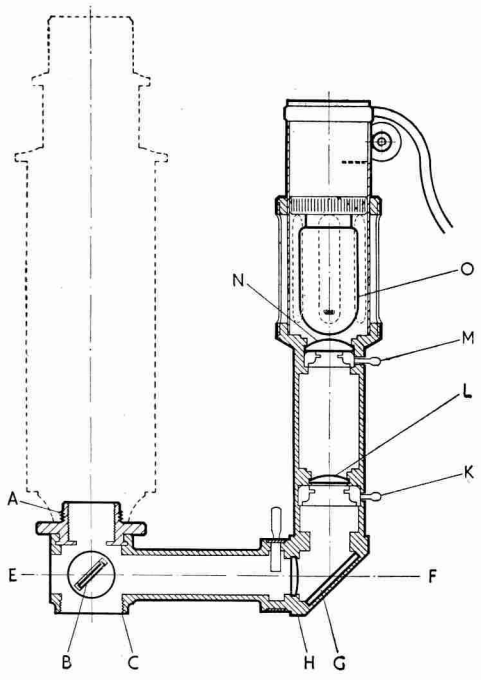

Fig. 4

The collar (A) has the standard R.M.S. thread by which the apparatus can be fitted to the microscope, and at (C) the object glass is attached.

A thin glass reflector is carried in a fitting at (B) which is operated by two milled heads, one of which rotates it on an axis (E F) and the other on an axis at right angles to this.

A tube which is parallel to the body of the microscope carries at its upper end (O) a 6 volt, 15 watt lamp giving a very intense light. A ground surface at (N) forms the source of illumination.

Immediately below the ground surface (N) is an iris diaphragm (M) by which the size of the source of illumination can be varied. Near the centre of the tube at (K) is a second iris diaphragm which is so placed that by means of the lens (H) its image is always in focus upon the specimen when the standard tube length of the microscope (160 mm.) is used. That is to say, the distance of the image of the diaphragm (K) formed by the lens (H) is at the same distance from the reflector (B) as the image formed in the eyepiece, giving what is known as critical illumination. A lens (L) is placed close to the iris diaphragm (K) of such a focal length that in combination with the lens (H) it forms an image of the source of light (N) close to the back lens of the object glass being used.

By means of the iris diaphragm (M) the illuminating beam of light can be made to just fill the whole of the back lens of the object glass or to use a smaller portion of its aperture, and cuts off all extraneous light reducing glare to a minimum. By means of the iris diaphragm (K) the area of the specimen which is illuminated can be regulated, thus securing maximum contrast. A stainless steel mirror (G) at an angle of 45° is used to turn the beam of light through a right angle.

A slot is provided for the insertion of colour screens or polaroid, and a blue-green filter is included with the illuminator.

Vertical Illuminators.

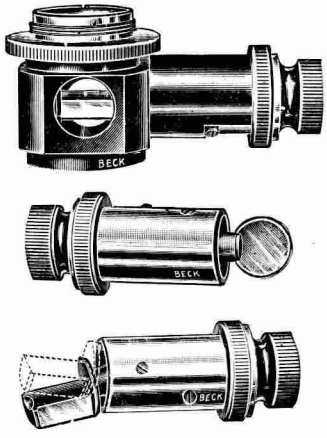

No. 4960. **Vertical illuminator** with either prism or thin glass reflector
No. 4960A. Thin glass or prism reflector (alternative) for above... ...

This illuminator, for the examination of opaque specimens, is supplied with either a prism or a thin glass reflector. It has two adjustments to the reflector, one which moves the light up and down, and the other right and left.

The thin glass reflector should be employed with the 1/3 in (8mm.) object glass and those of higher power. This enables the full aperture to be utilized. The prism reflector reduces the effective aperture but gives a brilliant image only suitable however with the low powers.

Nos. 4960 & 4960A.

No. 4964. **Vertical illuminator** with either prism or thin glass reflector ... ...
No. 4960A. Thin glass or prism reflector (alternative) for above ... ...
No. 2095. Transformer with dimming device, for alternating current ... ...
No. 2096. Spare bulbs ... ... each

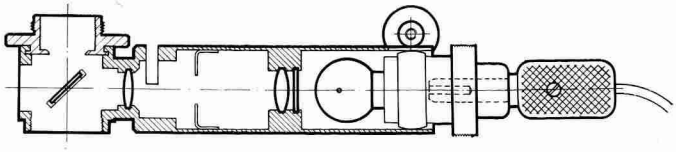

No. 4964.

This is similar to No. 4960, but has a self-contained light source built into it. It is of great advantage if used with a microscope without a stage having vertical travel, where difficulty occurs in retaining the light beam from an outside source in line with the illuminator, when the coarse adjustment is used. The bulb employed is 3.2 watt, 4 volt, and can be run from the mains by means of a transformer. The brilliance of the light is controlled by means of the transformer.

Polarising Vertical Illuminator.

No. 4961. **Polarising vertical illuminator** with prism reflector ... ...
No. 4960A. Thin glass reflector interchangeable with prism reflector of No. 4961 ... ...

This illuminator is similar to No. 4960 as described above, but in addition has a polarising element consisting of a " Polaroid " in rotating fitting through which the illumination is directed. It is used in conjunction with the No. 2375 or No. 2377 analyser listed on page 59.

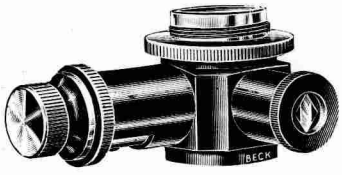

No. 4961.

Objective Changer.



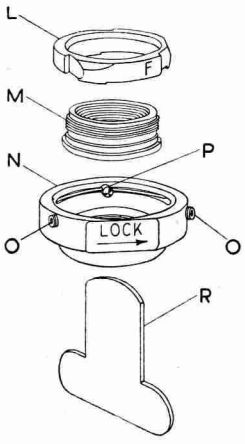

Fig. 5.

No. 1820. Objective changer and keys ... ...

No. 1821. Centring fittings for changer, one required for each objective ... ... each

No. 1822. Case to contain four centring fittings with objectives and keys ... ...

This objective changer is on a principle which ensures great accuracy in working and ease of manipulation. Both in the method of attachment of the object glass and in the simplicity of centration it is in advance of previous types of changer. It is made throughout in a specially hard steel, so that wear is practically eliminated. The illustration above shows the general appearance of the set of objectives with centring fittings in case. Figure 5 shows, diagramatically, the various parts. The adapter (L) is secured to the nosepiece of the microscope by clamp ring (M) which passes through it and is engaged in the R.M.S. objective thread and clamped home with the key (R) which fits into the two slots provided. The centring fitting (N) takes the object glass and is attached, in use, to the adapter (L) by a simple rotary movement. Two hexagon-ended keys are provided which fit at (O) and by means of which the adjustment for the centration of the objective is made. Tension is maintained throughout the adjustment by the spring plunger (P).

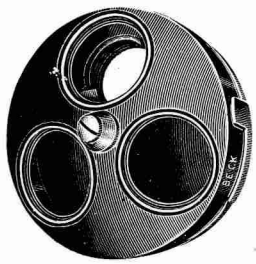

No. 3301.

Nosepieces.

No. 3300. Double nosepiece ... ...

No. 3301. Triple nosepiece ... ...

No. 3302. Quadruple nosepiece ... ...

No. 3272. Dust cap ... ...

These are accurately manufactured to give correct centration of the object glass and are of the dust-tight pattern. Dust caps can be supplied to occupy vacant spaces in the nosepieces.

Photomicrographic Cameras.

No. 3657. Eyepiece camera for $3\frac{1}{2}'' \times 2\frac{1}{2}''$ plates with 2 plate holders ... ...

No. 3658. Single plate holders, for 3657 ... ...



No. 3657.

The No. 3657 eyepiece camera is made to fit and clamp on the drawtube of the microscope. The instrument is used without the usual eyepiece, a projection lens being provided. An observing tube, fitted at a convenient angle, has an adjustment to enable it to be synchronized for focus with the image on the plate, so that observations can be made up to and during the exposure. A ground glass focussing screen is provided to enable this adjustment to be made and checked. The magnification given on the plate is equivalent to that which would be given visually by an eyepiece with a power of 5. An eight-speeded shutter is fitted giving speeds of 1/250th, 1/100th, 1/50th, 1/25th, 1/10th, 1/5th, 1/2 and 1 sec., bulb and time. This is actuated by an antinous release. The plates are carried in metal holders.

No. 3654. Eyepiece camera, with two plate holders ...

No. 3655. Single metal plate holders ... ... each

No. 3654 is a simple camera, fitting on to the drawtube over the microscope eyepiece. It has a ground glass focussing screen and uses plates, $3\frac{1}{4}$in. $\times$ $4\frac{1}{4}$ in., in metal plate holders. It is fitted with a shutter giving bulb and time exposures and actuated by an antinous release. The magnification given on the screen is two-thirds of that which is obtained at the eyepoint for visual work. The camera is very light, weighing, with a plate holder, 15 oz.

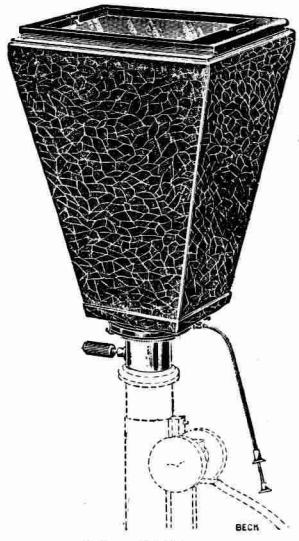

No. 3654.

35 mm. Photomicrographic Camera.

No. 4214. Photomicrographic camera 35 mm. with eight-speed shutter, complete with observing and focussing adapter and drawtube clamp, in case. ... ...

No. 4215. Observing and focussing adapter only, in case. ... ...

The 35 mm. photomicrographic camera is designed to fit over the eyepiece of the Beck monocular microscope or by adaption to any other standard microscope. It utilizes 35 mm. perforated film. The size of the picture is 1 inch diameter, and the camera accommodates approximately 50 in. of film, which is sufficient for forty exposures.



No. 4214.

The observing system is designed so that the operator can set up and adjust the instrument, carry out a search on the specimen, and at any time take a photograph, observations being made up to, and during, exposure.

It has a reflecting and beam-splitting device at the junction of the vertical and the inclined tubes, which directs an image of the object into the observing tube. In this tube is an accurately located crossline which is set parfocal with the film plane of the camera. An achromatic magnifier of 2 in. focus is used to observe the image, which is focussed until it is coincident with the crossline. The magnifier can be focussed relative to the crossline to suit the eye of the individual operator. The light transmitted to the camera constitutes 80% of the incident light. This ratio has been selected as the best balance of light intensities received by the eye and the camera, making the use of neutral filters for observing unnecessary. For loading and unloading purposes the complete camera is removed and taken to the dark room. The winding sprocket has a click device to locate each picture, and one complete turn of the wind-on knob moves the film forward one picture. A counter is provided to indicate the number of the picture in position. An eight-speed shutter is fitted giving exposures of 1/250th, 1/100th, 1/50th, 1/25th, 1/10th, 1/5th, 1/2 and 1 sec., bulb and time. This is actuated by an antinous release.

The observing and focussing adapter can be supplied for use with other miniature cameras, which can usually be adapted at a small cost.

Vertical Photomicrographic Camera.

No. 2259. **Vertical camera,** $\frac{1}{4}$ plate, with focussing screen, 45° mirror and 3 single metal plate holders ... ...
No. 2259A. as No. 2259 but for 9 × 12 cm. plates ... ...
No. 3655. Single metal plate holders, $\frac{1}{4}$ plate ... ... each
No. 3656. Single metal plate holders, 9 × 12 cm. ... ... each
No. 3659. Holder for roll films ... ...
No. 2271. Angular focussing magnifier ... ...

As described on pages 74-76, this camera is constructed for use in three ways. It can be employed with any microscope of standard design for photomicrography with the highest magnifying powers. Using the macroscopic stand in place of the microscope, large specimens may be photographed, the stand providing a convenient means of holding and focussing the specimen together with the means of illumination from a separate source. The camera, with special illuminating apparatus can be used also for the photography of large polished specimens by vertical illumination at magnifying powers as low as ×2.



No. 2259.

The camera No. 2259 is of particularly rigid construction and therefore suitable for the highest power work, the risk of vibration being reduced to a minimum. The base plate is a heavy iron casting measuring 12 inches by 9 inches. The top surface is machined accurately smooth and flat, so that the microscope or the macroscopic stand described later, will stand firmly upon it without risk of movement. The very robust upright, carrying the camera, is fitted into this. The camera, which is quarter plate, $3\frac{1}{4}$ in. × $4\frac{1}{4}$ in. or 9 cm. × 12 cm. size, has variable extension from 5 to 15 inches. An eight speeded shutter is fitted, giving exposures of 1/250, 1/100, 1/50, 1/25, 1/10, 1/5, 1/2 and 1 second and also bulb and time exposures. An antinous release is provided for the operation of the shutter. A light tight fitting connects the camera to the draw-tube of the microscope. The plates are carried in metal plate holders, or a holder can be provided for roll film, when the size of picture is $3\frac{1}{2}$ in. × $2\frac{1}{2}$ in. A focussing screen is provided. A 45° reflector is placed over the ground glass screen as shown in the illustration. This facilitates the examination of the image during focussing. As an additional aid to focussing the No. 2271 angular focussing magnifier, described on page 60, may be employed. This is of particular use with very fine structures where the grain of the ground glass interferes with the precise setting of the focus.

The whole camera can be swung aside from the optic axis of the microscope, so that it is possible to observe direct for arranging the object before photographing, without disturbance to the position of the microscope or the lighting arrangements. This movement can also be used to swing the camera over the back of the base. By placing the base at the edge of a bench and thus allowing the camera to project over its edge, objects placed on a low stand or on the floor can be photographed direct.

The camera can be used with any suitable microscope, the only adaptation which may be required for microscopes other than our own make being the light-tight joint, which we can supply of the correct size if the outside diameter of the drawtube is stated when ordering. Normally, it is made to suit the R.M.S. standard size for this fitting, i.e. 1.05 inch.

Photomicrographic Outfits.

The No. 2259 vertical camera is used in conjunction with the microscope for the photography of transparent and opaque specimens at magnifications of ×20 and over. The illustrations below show the apparatus erected for this purpose, the first being the method used for transparent specimens. It will be seen that the lamp is mounted on a baseboard attached to the camera base and arranged so that it is in alignment with the microscope. As the Tenslite lamp (see page 79) is fitted with a dimming switch, the brilliancy of the light may be cut down for observation purposes and restored to full brilliancy for the photographic exposures.

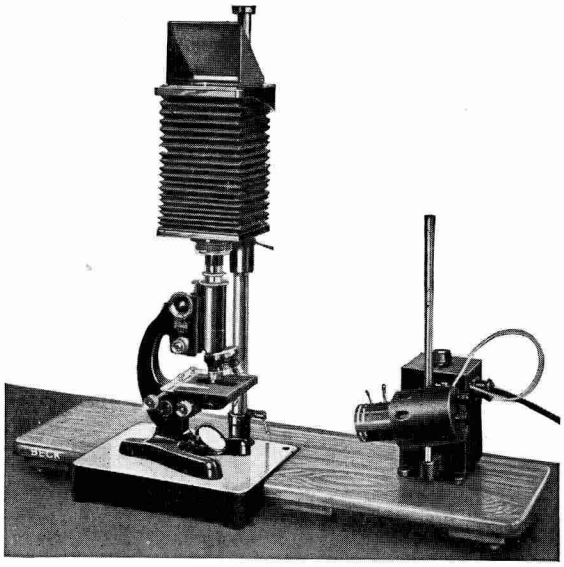

No. 2259. Vertical Camera, with equipment for transparent illumination.

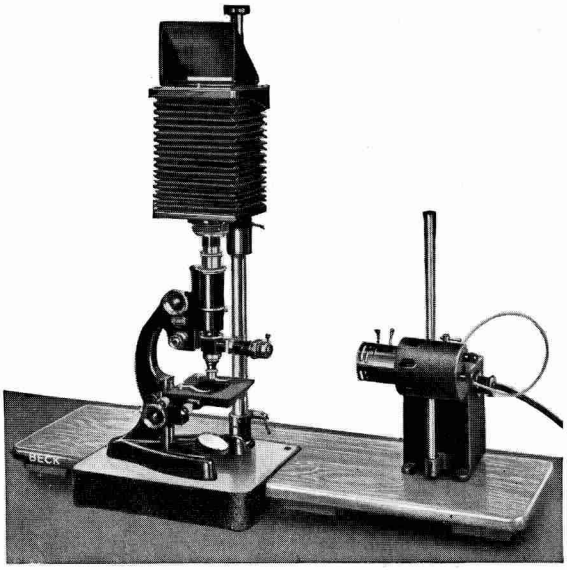

No. 2259. Vertical Camera, with equipment for opaque illumination.

The microscope illustrated, for use for transparent specimens, is the No. 47L, described on pages 4, 5, 10 and 11. Any available microscope of rigid design is suitable for use with this camera, the only adaptation possibly required being the alteration of the size of the light-tight joint, which fits on to the top of a drawtube 1.05 in. dia. We can provide a simple adapter if the outside size of the tube is stated.

The second illustration shows the apparatus as used with opaque objects. The microscope illustrated is the No. 3228 Laboratory metallurgical, described on pages 24 and 25, fitted with a No. 2013 Vertiphase illuminator, which is strongly recommended for use in this type of work, as it provides complete adjustments for the light. The Tenslite lamp is raised on its upright to the correct height for directing the beam into the illuminator. A simpler form of vertical illuminator may be used, such as the No. 4960, but in this case, to provide complete control over the illumination, the No. 2364 Wrighton illuminating bench, as described on page 82, is recommended.

Accessories for above outfits.

No. 3516L.	**Tenslite lamp** with extra height	
No. 3517.	Spare lamps for No. 3516L	each
No. 2276.	**Baseboard** for Nos. 2259 and 3516L	

Macrophotographic Outfits.

The No. 2259 vertical camera can also be employed for macrophotography, that is the photography of large specimens without the use of a microscope and with powers ranging up to ×20. For this purpose, the macroscopic stand, as shown in the illustrations, is used, together with specially corrected lenses. Here again, transparent and opaque objects may be photographed. The first illustration shows the apparatus set up for the photography of transparent objects. The illuminant in this case is a special large light source which is necessary to obtain even illumination with large specimens.

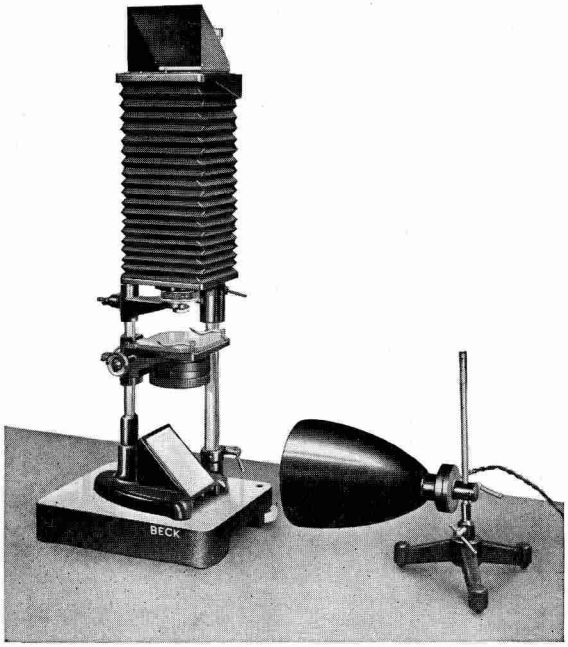

No. 2259, with Nos. 2261, 2263 and 2270, for transparent illumination.

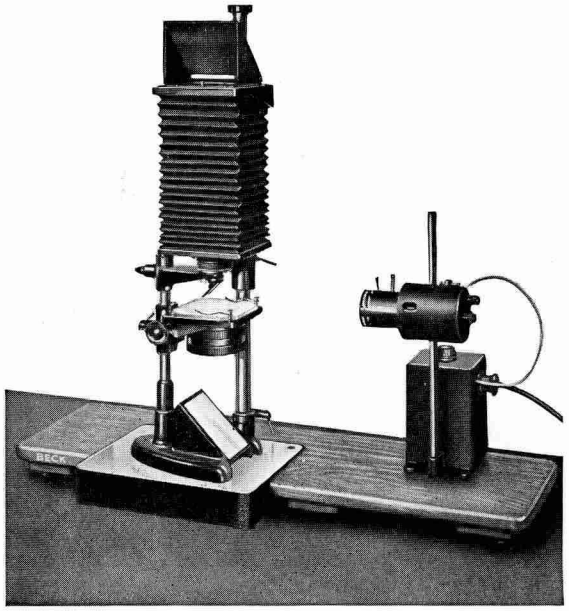

No. 2259, with Nos. 2261, 2263, 2265, 3516L and 2276, for opaque illumination.

The stand, which is of substantial construction, is placed upon the base of the vertical camera. It carries a vertical pillar to which is attached a stage with rack and pinion focussing adjustment and a large condenser. If required, a mechanical stage of the built-in pattern, as fitted to the No. 47P, illustrated on page 12, can be supplied in place of the plain stage. A reflector is fitted for illuminating the object from below. It is possible to effectively illuminate transparent objects up to 2½ in. diameter. The Microstigmar lenses of 18 mm., 25 mm. and 48 mm. focus, together with the use of the varying extension of the camera, enable magnifying powers of ×2 to ×20 to be obtained.

The second illustration shows the apparatus as employed for the photography of opaque specimens. The beam from the Tenslite lamp is thrown upon the reflector, Nos. 2264, 2325 or 2265, used in conjunction with the Microstigmar lens. The reflector, which is of thin clear glass, throws light upon the object, and, being transparent, allows the image to pass through it. This apparatus is suitable for powers not lower than ×6. Particulars of the Microstigmar lenses and reflectors will be found on page 76.

Accessories for above Outfits

No. 2261. **Macroscopic stand,** in case ... ...
No. 2314. **Macroscopic stand** with built-in mechanical stage, in case ... ...
No. 2270. **Large light source,** on stand ... ...
No. 2255. Spare lamps for No. 2270 ... ... each

Macrophotographic Outfit.

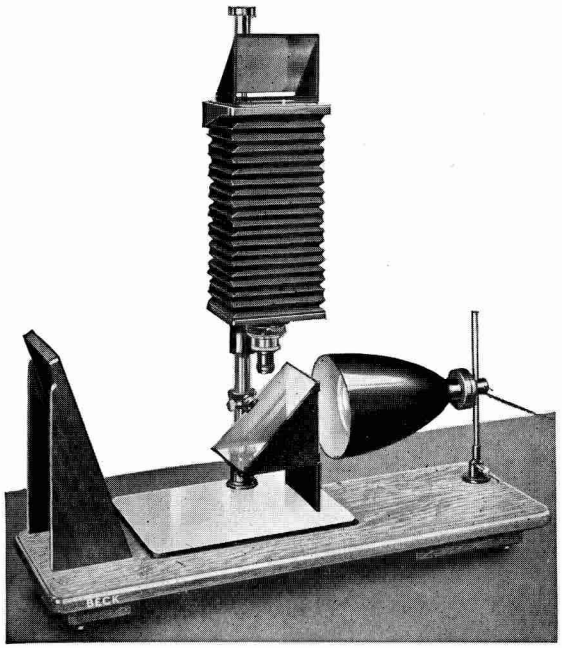

Where very low magnifications are required, with a consequently larger area of the specimen illuminated, special lenses and illuminating apparatus are necessary. The macroscopic stand No. 2261 is not used, the specimen being placed upon the base of the vertical camera and the special illuminating apparatus No. 2266 employed. This consists of a large light source mounted on a baseboard with a light baffle used in conjunction with a large transparent glass reflector fitted on to the upright of the camera. A focussing mount is attached to the camera front carrying either of the long focus Microstigmar lenses listed below. With the 150 mm. focus lens, magnifying powers of $\times 2$ to $\times 2\frac{1}{2}$, according to the camera extension, can be obtained with even illumination. With the 80 mm. focus lens, powers of $\times 2\frac{1}{2}$ to $\times 5$ are obtained. The apparatus as used in this manner is shown in the illustration. Its particular feature is the provision of even illumination of the large area of an opaque object necessary for photography at very low powers.

Nos. 2259, 2266 and 2267, for opaque illumination.

No. 2266. **Illuminating apparatus** consisting of base board and baffle, large light source, reflector for vertical illumination and focussing adapter ... ...

No. 2269. Spare lamps for No. 2266 ... ... each

Microstigmar Lenses and Reflectors.

No. 2262. **Microstigmar lens,** 18 mm. focus ... ...
No. 2324. **Microstigmar lens,** 25 mm. focus ... ...
No. 2263. **Microstigmar lens,** 48 mm. focus ... ...
No. 2268. **Microstigmar lens,** 80 mm. focus ... ...
No. 2267. **Microstigmar lens,** 150 mm. focus ... ...
No. 2264. Reflector for No. 2262 ... ...
No. 2325. Reflector for No. 2324 ... ...
No. 2265. Reflector for No. 2263 ... ...

This series has been computed for use in macrophotography, and will be found to give most satisfactory definition for this purpose. The Nos. 2262, 2324 and 2263 can be used with their respective reflectors for opaque illumination, as described on page 75. The aperture of these lenses is f 4.5, equivalent to N.A..11. The two long focus lenses Nos. 2268 and 2267 are used, as described above for very low power work and have an aperture of f 6.3, equivalent to N.A. .08. All lenses are provided with iris diaphragms and are mounted with the standard R.M.S. objective thread.



Whole Plate Photomicrographic Apparatus.

No. 2274. Photomicrographic apparatus as illustrated and described, without objectives, eyepieces or substage condenser ... ...

The photomicrographic apparatus here described has been constructed to meet the requirements for a complete equipment of the horizontal type and utilizing plates up to whole plate size ($8\frac{1}{2}$ in. $\times$ $6\frac{1}{2}$ in.). We are indebted to Dr. F. J. Aumonier and others for many valuable suggestions. It is made to order and modifications, within limits, can be incorporated to suit special requirements. Quotations will be made for outfits on receipt of particulars.

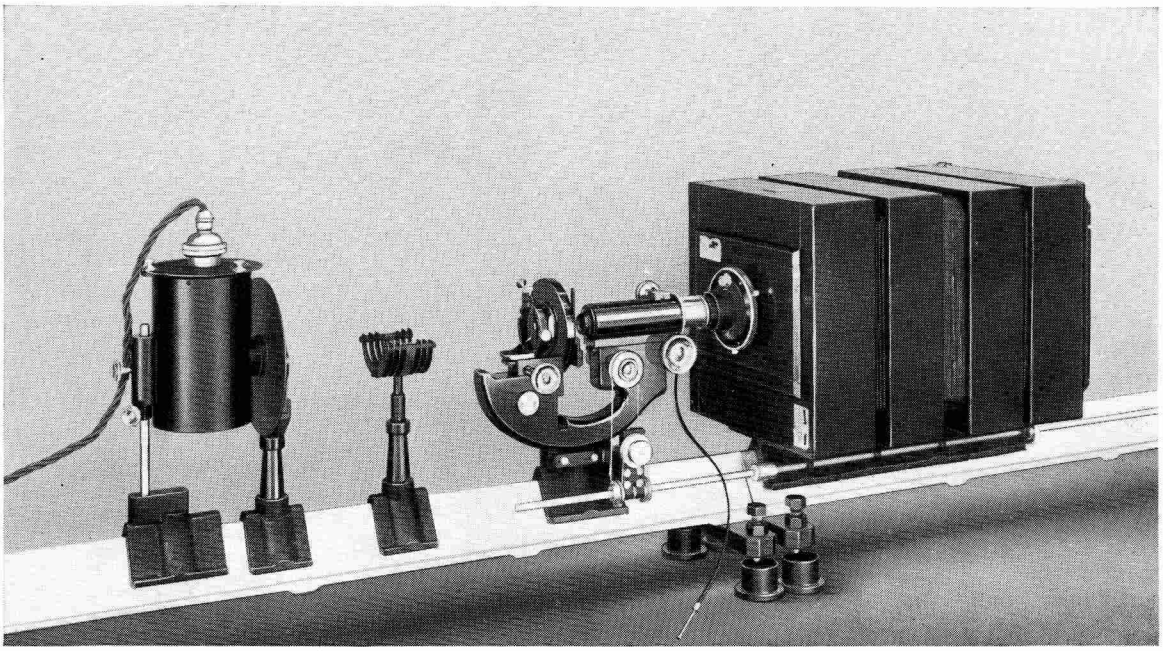

The apparatus is carried on two triangular section benches each 2 metres long. These are mounted on cross-bars with levelling screws and sockets for the correct levelling and alignment of the apparatus. One bench carries the camera which is of the square bellows type taking whole plates ($8\frac{1}{2}$ in. $\times$ $6\frac{1}{2}$ in.) and having a maximum extension of 2 metres. A focussing screen and two double dark slides are provided. Carriers are fitted into the slides for the use of smaller plates down to $\frac{1}{4}$ plate size ($3\frac{1}{4}$ in. $\times$ $4\frac{1}{4}$ in.). An exposure shutter is fitted.

The second bench carries the microscope and the illuminating apparatus. The microscope is similar to the No. 47, described on pages 4 and 5. The limb is attached direct to a saddle piece, fitting on to the bench. The body has a rack and pinion draw tube. The stage has a rotating movement to allow the image of the object to be correctly placed on the plate and is fitted with mechanical adjustments for the lateral movement of the object.

The illumination is by means of a " Pointolite " with a condensing system of lenses. Provision is made for the use of colour filters.

A separate stage is provided for macrophotographic work, when the microscope is not employed, the photographic lens being attached to the camera front.

Suitable optical equipment may be selected from the catalogue.

Complete quotations can be given on receipt of specification of requirements.

Micro-Projection Apparatus.

A special booklet is published giving full details of this apparatus. A copy will be sent on application.

No. 4972. **Micro-projection apparatus** consisting of baseboard, viewing cabinet, illuminating unit and reflector unit for fitting to drawtube of microscope, for use with microscope in inclined position ... ...

No. 4972A. As No. 4972 but for use with microscope in vertical position ... ...

No. 4973. **Mercury vapour lamp,** 250 watt, complete with choke, etc. ... ...

No. 4974. Carrier for bromide paper, for photography. $\frac{1}{1}$ plate size ... ...

This apparatus is suitable for all classes of examination with the microscope, by the projection method. This method avoids the eyestrain associated with long periods of work and permits more than one observer to view the image at the same time, making it especially valuable for teaching. The highest powers, including the oil immersion lens, can be satisfactorily employed.

The illuminant, microscope and projection screen being mounted firmly on a baseboard, ensures rigidity and obviates flicker or movement of the image. To obtain an adequately illuminated image, a brilliant source of illumination is necessary, and a high power mercury vapour discharge lamp is employed.

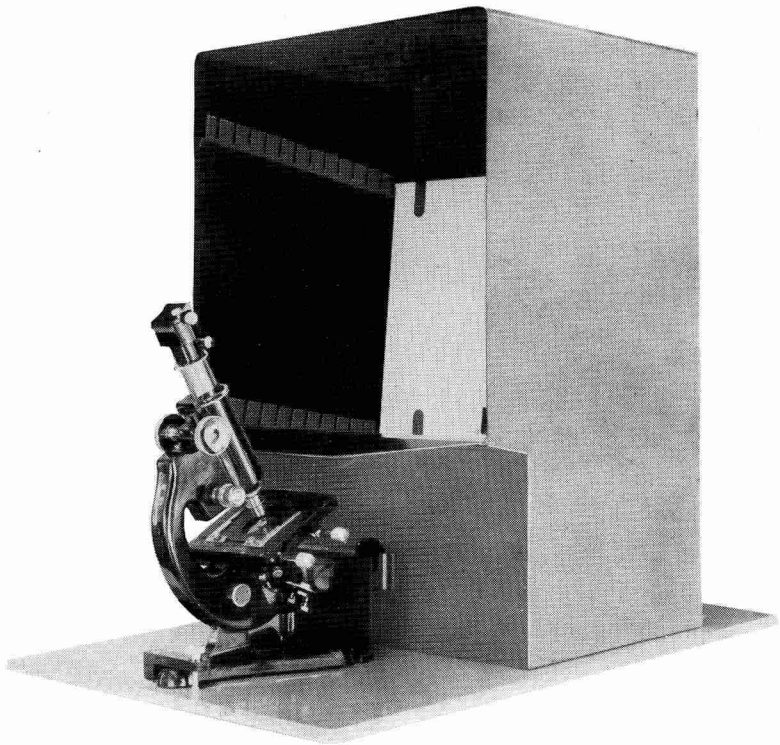

No. 4972 with No. 47L London microscope.

The apparatus is suitable for all classes of visual observation and also for accurate measurement. A graticule inserted in the eyepiece is projected upon the screen, superimposed upon the object. By setting the extension of the drawtube, the size of the graticule can be set to a definite reading. As the highest magnifying power can be employed, the greatest accuracy can be attained in the readings.

The apparatus is designed for use with the No. 47L microscope, but similar microscopes of any make can usually be adapted.

Tenslite Lamp.

No. 3516. **Tenslite lamp,** with ground and green glasses ... ...
No. 3517. Spare bulbs for above ... ... each

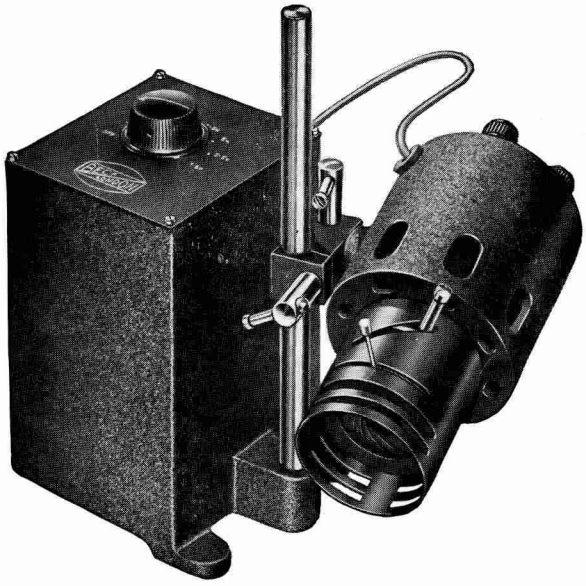

No. 3516.

This lamp is a powerful illuminant for microscope work by all usual methods, including vertical, dark ground and phase contrast illumination. It is a complete unit with its transformer built in, and is provided with a dimming switch, so that the intensity of the light can be regulated to the amount required for the form of illumination being used and to suit the object under examination. The general design of the lamp may be seen from the illustration. It has full mechanical adjustments for raising and lowering and for setting at the correct angle. It is provided with a corrected condenser, which has a focussing adjustment, an iris diaphragm and slots for the accommodation of light filters or neutral screens. The bulb has an individual centring adjustment operated by two rotating milled knobs at the back of the lamphousing to centre the filament accurately in relation to the condenser and iris diaphragm. The illuminant is a 6 volt, 48 watt lamp with a multiple coiled filament of the solid source type. The lamp can be run off any alternating current from 200 to 250 volts.

Reflex Lamp.

No. 3336A. **Reflex lamp,** with 60 watt lamp, wiring and connector ... ...

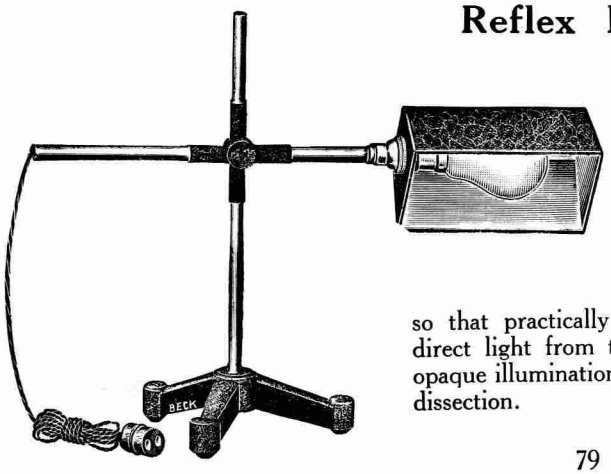

No. 3336A.

This consists of a heavy iron tripod stand with an upright, upon which the arm carrying the lamp slides, so that it can be adjusted for height, and rotated. The lamp is fitted on to an arm which slides in a horizontal direction and can also be rotated about a horizontal axis, so that practically universal adjustment is given. A shade shields direct light from the eyes. It is suitable for both transparent and opaque illumination and also for illuminating trays, dishes, etc., during dissection.

Beck Electric Lamp.

No. 3330. **Beck electric lamp,** with 60 watt lamp, condenser, ground and green glasses ... ...
No. 3331. **Beck electric lamp,** with 150 c.p. Pointolite lamp and fixed resistance for alternating current, condenser, ground and green glasses ... ...
No. 3332. **Beck electric lamp,** with 100 c.p. Pointolite lamp and fixed resistance for direct current, condenser, ground and green glasses ... ...
No. 3680. Iris diaphragm ... ...
No. 3681. Achromatic and aplanatic condenser in place of ordinary condenser ... ... extra
No. 3334. Spare Pointolite bulb for No. 3331 ... ... each
No. 3335. Spare Pointolite bulb for No. 3332 ... ... each

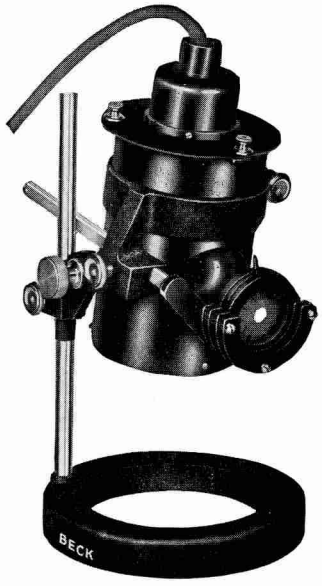

No. 3331.

This lamp has been designed so as to provide a completely adjustable light source for all classes of microscopic illumination. It consists of a heavy circular base with an upright upon which the lamphouse moves in a vertical direction and upon which it also tips so as to alter the horizontal axis of the light. Both adjustments are provided with clamps. By means of the raising and lowering adjustment, the lamp can be placed in any position between 3 in. and 9 in. above the table. An adjustment is provided for the accurate alignment of the light source in the optic axis. The condenser can be focussed and clamped in the required position. Provision is made for the accommodation of an iris diaphragm and colour screens, 2 in. square. The complete adjustments render the lamp suitable for use with all methods of microscopic illumination. A 60 watt or Pointolite lamp can be employed as the illuminating source. The latter is strongly recommended for high power work, and especially for dark ground illumination. It is a very satisfactory illuminant, the source of light being a sphere of tungsten about 1/10 in. diameter, which when incandescent, has extreme intensity. This lamp is supplied of 100 c.p. for direct current, or 150 c.p. for alternating current, and is used in conjunction with a fixed resistance so that it is necessary to specify the voltage of the electric supply when ordering.

Simplex Lamp.

No. 3625. **Simplex lamp** ... ...
No. 3626. Spare screens ... ... each

This lamp is suitable for general microscopic work, excepting dark ground illumination. The casing is strongly made and well ventilated, finished in crystalline enamel. The light source is a 60 watt lamp and the screen a special blue glass, giving an illumination equivalent to daylight. Screens of red, orange, green and blue-green glass can be supplied if required.

The lamp is supplied complete with flexible wire and bayonet or pin adapter. In ordering, the voltage of the electric supply should be specified, also whether bayonet or pin adapter is required.



No. 3625.

Intensity Lamp.

No. 3344. **Intensity lamp,** on stand, with condenser, one ground and one green glass, with resistance for D.C. ... ...

No. 3344T. As No. 3344, but with transformer for A.C. ... ...

No. 3389. As No. 3344T but with dimming device ... ...

No. 3344B. As No. 3344, but to work from available 12 volt supply ... ...

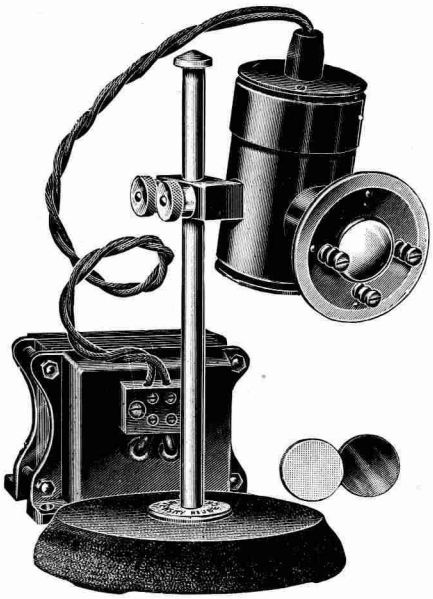

No. 3344T.

No. 3344A. Iris diaphragm ... ... extra

No 3682. Achromatic and aplanatic condenser, in place of ordinary condenser extra

No. 3344D. Spare bulbs, 12 volts 24 watts ... each

This illuminant is of great intrinsic brilliancy and is suitable for all microscopic work, including dark ground illumination. The source of light is a closely coiled filament, and is contained in a tubular lamphouse fitted with a condensing lens which has focussing adjustment. Two forms of condenser are supplied, one a simple lens, the other a corrected combination which is achromatic and aplanatic. An iris diaphragm can be fitted, if desired. Ground and green glass screens are supplied. The lamphouse is mounted on a firm base, and can be adjusted for height and tilted to any angle, these adjustments being provided with clamps. No. 3344B can be operated from accumulators on 12 volts. If run from mains, on direct current, an adjustable resistance is used, which operates from 100 to 250 volts. For alternating current, a transformer is employed, operating from 210 to 250 volts. In No. 3389 it is provided with a dimming device for regulating the intensity of the illumination. Flex and connector to fit the standard sized bayonet lampholder are supplied.

Light Filters.

No. 2187. **Chance filters,** 2 in. × 2 in., all colours Nos. 1–13 ... ... each

No. 2189. **Chance filters,** 2 in. × 2 in., Nos. 14 and 15 ... ... each

No. 2191. **Chance filters** as No. 2187, $1\frac{3}{16}$ in. or $1\frac{3}{8}$ in. dia. ... ... each

No. 2193. **Chance filters** as No. 2189, $1\frac{3}{16}$ in. or $1\frac{3}{8}$ in. dia. ... ... each

No. 2196. **Set of Chance filters,** 2 in. × 2 in., Nos. 1–13, in case ... ...

These light filters are made from Chance filter glass. They have the advantage over gelatine filters, in that they will withstand heat. They are optically polished and made to a thickness of $2\frac{1}{2}$–3 mm. The complete set No. 2196 is supplied in a leatherette case. The series comprises the following colours:— No. 1 Ruby, No. 2 Red, No. 3 Deep Orange, No. 4 Light Orange, No. 5 Green, No. 6 Blue-green, No. 7 Blue, No. 8 Purple, No. 9 Daylight, No. 10 Dark Neutral, light transmission 7%, No. 11 Light Neutral, light transmission 23%, No. 12 Dark Orthochromatic, No. 13 Light Orthochromatic, No. 14 Ultra-violet, isolating wavelength 3650A., No. 15 Ultra-violet, isolating wavelengths 3126 and 3131A from the mercury vapour source.

Wrighton-Beck Illuminating Bench.

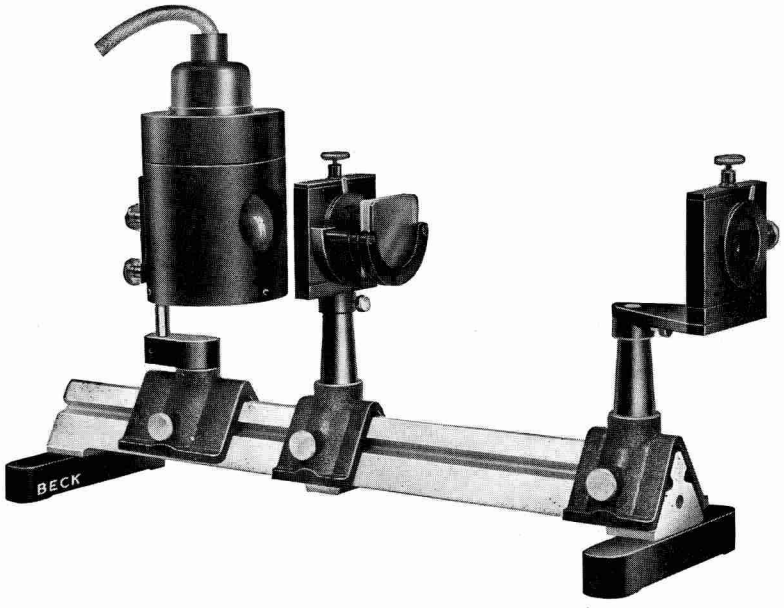

No. 2364.

No. 2364. Wrighton-Beck illuminating bench with "Pointolite" 150 c.p. lamp and fixed resistance for alternating current ... ...

No. 2365. Wrighton-Beck illuminating bench with "Pointolite" 100 c.p. lamp and fixed resistance for direct current... ... ...

The Wrighton-Beck system of illumination for metallurgical work has been in use for a long period and has proved very successful in that it gives complete control of the illumination of the specimen in conjunction with the vertical illuminator of the microscope. The bench Nos. 2364/5 has all necessary adjustments to enable full advantage of this method to be taken.

The system employs two lens combinations and two iris diaphragms in addition to the powerful light source. The first lens system is placed close to the illuminant and has an iris diaphragm adjacent to it. The second lens, also with an iris diaphragm, is between the first lens and the 45° reflector of the vertical illuminator on the microscope. The first lens is placed at such a distance from the second that it forms an image of the light source on it, the image being enlarged to fill the whole lens. The second lens is placed at such a position that it is in focus upon the object, and forms an image of the first iris diaphragm upon the back lens of the object glass. The illumination can therefore be controlled by the use of the two diaphragms, the first varying the total size of the beam, so as to illuminate either the whole or a restricted portion of the object glass and the second restricting the amount of the object upon which the light falls, so that only the area under examination is illuminated and light is cut off from surrounding parts, thus obviating glare from them.

The general design of the bench can be seen from the illustration. It will be seen that the fittings carrying the lenses and diaphragms are carried on an optical bench upon which they can be adjusted for position and clamped. The illuminant, which is a "Pointolite" is also carried in this manner. The height of the optical centre is adjustable to suit the position of the vertical illuminator on microscopes of various models. Full adjustments for the correct centration of the lenses and diaphragms are provided and a holder is fitted for the accommodation of light filters, 2 in. × 2 in., as listed on page 81. As the Pointolite lamp is supplied with a fixed resistance for one voltage only, it is necessary when ordering to specify the voltage from which it is to be used.

Mercury Vapour Illuminants.

No. 3627. Hanovia microscope lamp, complete with control unit, glass condenser and No. 14 filter ... ...
No. 3628. Quartz condenser in place of glass condenser ... ... extra
No. 3678. Microscope mirror, with aluminium reflecting surface for ultra-violet light, 2in. diam., flat, mounted to clip on to 2 in. diameter microscope mirror ... ...

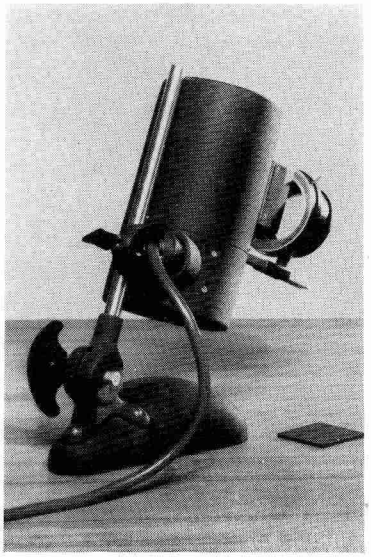

No. 3627.

The No. 3627 Hanovia lamp is a high-pressure mercury arc mounted for use with the microscope, as shown in the illustration. It has a condenser for focussing the beam and an iris diaphragm for regulating its size. With filter No. 14, the wavelength is 3650A, or with filter No. 15 shorter wavelengths are transmitted. For fluorescence work, the longer wavelength may be used with the usual substage condenser and silvered glass mirror of the microscope, but for the shorter wavelength, the quartz lamp condenser No. 3628 is used. In conjunction with this the No. 3678 aluminized mirror and the quartz substage condenser No. 3666 (see page 62) are employed.

The No. 3627 lamp includes the control unit. The A.C. model operates with a transformer on any specified voltage from 90 to 260 volts and consumes 100 watts. The D.C. model works with a resistance from 200 to 260 volts and consumes 350 watts.

No. 3742. High intensity mercury vapour lamp, complete on adjustable stand ...
No. 3743. Quartz condenser in place of glass condenser ... ... extra
No. 1810. Heat absorbing filters ... ... per pair

This lamp is similar to the unit fitted to our No. 50 Universal microscope and is suitable for high power photomicrographic work and for all purposes for which the ultra-violet region of the spectrum is employed. The general design can be seen from the illustration. The stand has a firm base upon which the lamp can be adjusted for height. It has centring movements to align the light source. A glass condenser is fitted, but where work with ultra-violet light is being done, the quartz condenser No. 3743 is necessary. Racks for screens and filters are provided and heat-absorbing filters can be supplied to avoid any damage to the microscope or the specimen. Control gear is provided and the lamp gives 250 watts and runs from the mains on voltages 190 to 260 volts.

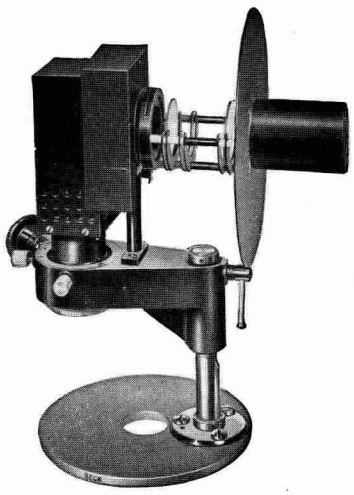

No. 3742.

Stages.

No. 3513. Micrometric stage, reading in inches ... ...

No. 3514. Micrometric stage, metric readings ... ...

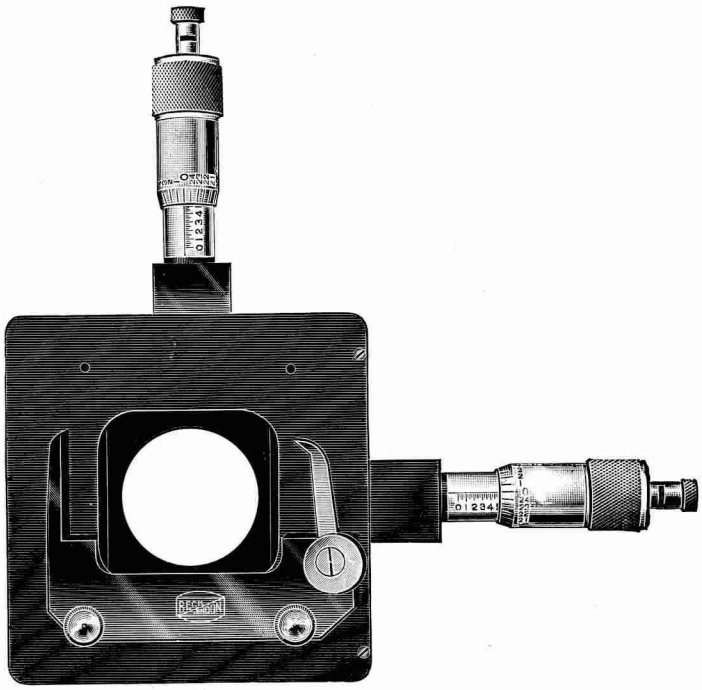

No. 3513 and No. 3750.

This stage provides for the measurement of objects in either inches or millimetres, with very great accuracy. It has a movement of 1 in. in each direction and readings are taken on the micrometer heads. Four types of micrometers are fitted reading to .001 in., .0001 in., .01 mm. and .005 mm. respectively. The Topley top stage, described below, can be fitted to the surface of the stage to accommodate and position specimens mounted on 3 in. × 1 in. slides. The stage can be fitted to the No. 47, No. 3228 Laboratory Metallurgical, No. 50 Universal and No. 3523 Micrometric microscope.

No. 3750. Topley top stage ... ...

This supplementary stage may be attached to the micrometric stage No. 3513 or 3514, as described above, or to the built-in stage, as fitted to the microscopes No. 47P and 48P. In these stages, the top surface is a plain plate and when it is desired to hold 3 in. × 1 in. slides upon them, the Topley top stage is attached by means of screws with milled heads. By the use of this, the slide is placed and held in a definite position when the verniers or micrometers are in use. It has an adjustable arm which securely holds the slide. The top stage is shown in position on the micrometric stage.

No. 3422. Stage forceps ... ...

These forceps form a very convenient method of holding small objects during examination. The holder carrying the forceps is rotatable in its mounting, ensuring that the object can be viewed in all positions. The further end of the arm carrying the forceps has a cork pad to which objects may be pinned.



No. 3422.

Stages.

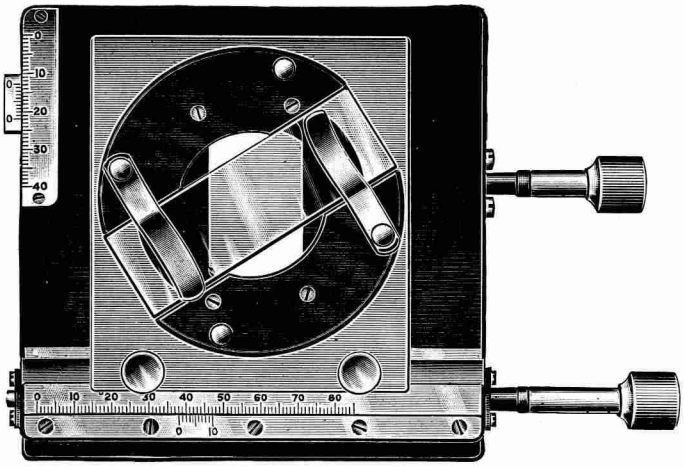

No. 3545 on stage No. 3515.

No. 3545. Revolving super-stage. ... ...

A requirement for a revolving motion for the orientating of the object in addition to the lateral movements of a mechanical stage has arisen in connection with the counting of particles on thermal precipitate slides of the type where a number of specimens are deposited radially from the centre.

Its construction may be seen from the illustration. It is suitable for attachment to stage No. 3515, being fitted in place of the clips which normally hold the glass slides.

No. 3457. Simple revolving super-stage ... ...

This is a simple form of revolving stage, for use on No. 10 and No. 15 microscopes and suitable for gemmological work.

Stage Illuminator.

No. 3608. Stage illuminator ... ...

No. 1731. Transformer for alternating current ... ...

No. 2096. Spare bulbs ... ... each

This attachment fits to the No. 3515 mechanical stage for the purpose of illuminating the scales and verniers to facilitate reading in a subdued light. It uses a 3.2 watt, 4-volt lamp, which may be run by means of a transformer from the mains.

Warm Stage.

No. 3387. Electrically heated warm stage ... ...

The dimensions of the stage are $3\frac{1}{4}$ in. square and thickness $\frac{3}{4}$ in. The clear aperture is $1\frac{5}{8}$ in. and clips are provided for holding the specimen. The temperature is adjustable, up to a maximum of about 50°C by means of a milled head at the side and there is an entry hole for a thermometer. When set, the temperature is maintained by means of a thermostat. A resistance lamp is used in the circuit, and the stage can be operated from either A.C. or D.C. supply within a range of 200 to 250 volts. 6 ft. of flex is supplied.

When ordering, the temperature required and the voltage of the available supply should be specified.

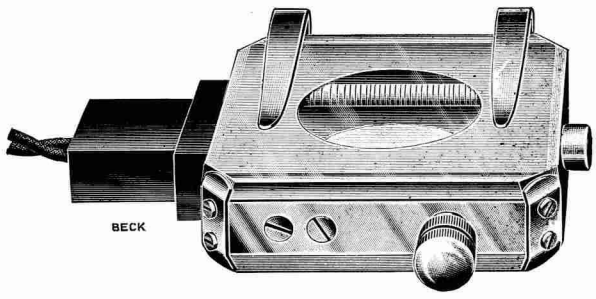

No. 3387.

Mechanical Stages.

No. 3515. Mechanical stage ... ...

This stage is of built-in design and is illustrated on page 10. It has a travel of 3 inches in the horizontal and 1 inch in the vertical direction. Scales and verniers are fitted to both movements. This stage is fitted to microscopes Nos. 47L, 47LI, 48L and 48LI.

No. 3305. Mechanical stage ...

This stage is readily attached and removed from the plain stage. It has horizontal travel of 3 in. and vertical travel of 1 in. The racks are specially cut to a very fine pitch to give delicate and smooth motions. This stage is supplied for any of the No. 47 and No. 48 microscopes which have plain stages, i.e. Nos. 47A, 47B, 47C, 47CI, 48C and 48CI.

No. 3305A. Mechanical stage ...

This stage is similar to No. 3305 but has a travel of 2 in. in the vertical direction and accommodates a slide 3 in. × 2 in.

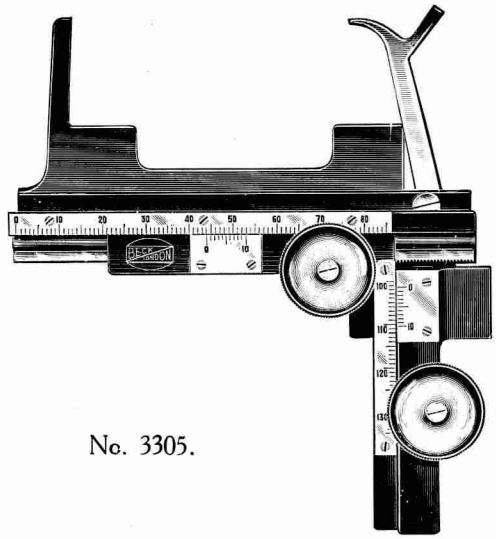

No. 3305.

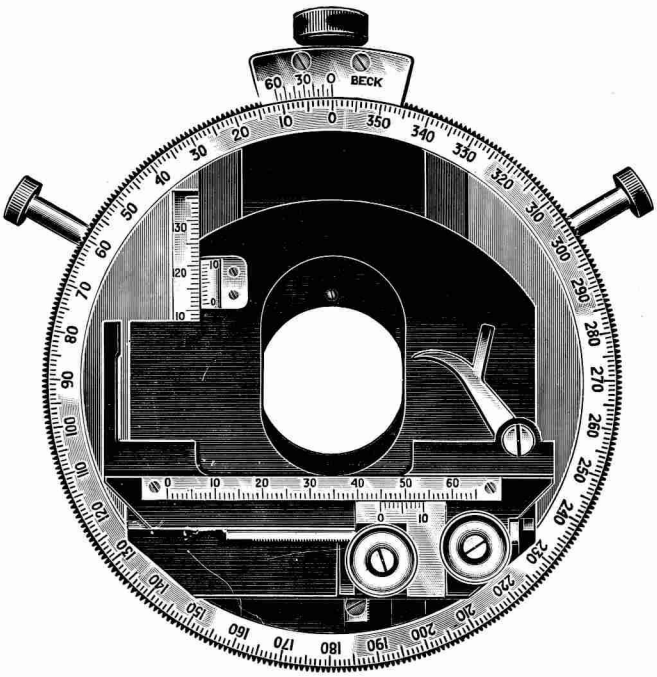

No. 3306.

No. 3306. Concentric rotating mechanical stage ...

This stage is circular with revolving and centring adjustments. A clamp is fitted to the rotation. The mechanical movements have a travel of 3 in. and 1 in. respectively and are actuated by milled heads as shown in the illustration. The racks employed are cut with very fine teeth giving smoothness and delicacy of movement. A scale and vernier is provided to each. The stage is divided on its edge in degrees and a vernier is fitted. This stage is fitted to Nos. 47K and 48K.

Grinding and Polishing Machine.

(for metallurgical specimens)

No. 1290. **Grinding and polishing machine** (without motor), with one polishing disc, cover, catcher, disc lifters, drainage tap, 12 feet of connecting wire, plug adapter and tin of grease ... ...

No. 1290M. As No. 1290, but complete with motor for 230 volt A.C., 50 cycle, single phase mains

No. 1291. Drip can fitted to No. 1290 or 1290M ... ... extra

No. 1292. Extra polishing discs in brass ... ... each

No. 1293. Extra polishing discs in aluminium ... ... each

This machine is complete and self-contained, convenient and efficient in working.

The main frame of the machine consists of a substantial casting, as shown in the illustration. A vertical spindle (A) carries a grinding and polishing disc (B) 6½in. diameter, driven by a small motor (L). The steel spindle (A) receives the disc (B) upon which the polishing or grinding material is placed; it is furnished with speed cone pulleys (F) and is driven from the driving cone (G) on the spindle of the motor (L). By shifting the belt on the speed cone, a range of speeds varying from about 225 to 625 revolutions per minute can be obtained.

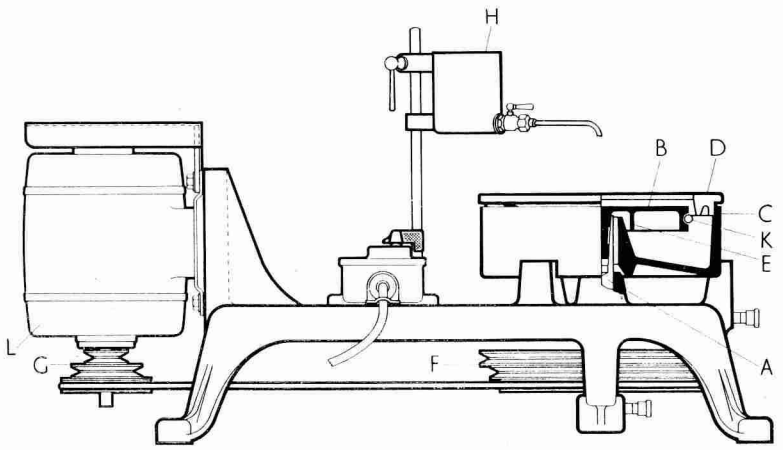

No. 1290M with No. 1291.

The brass disc (B) fits by means of a tapered fitting on to the spindle (A) which allows of its easy removal, a lip (E) projects downwards and prevents grinding material reaching the bearing. The cloth for polishing, or emery paper for grinding, is secured to the disc by a groove in the edge of the disc. The paper or cloth is stretched over the surface of the disc and is held in position by means of a garter (K) made of stiff spring, which fits the groove.

The disc is surrounded by a removable catcher (C). Into the top of the catcher is fitted a guard ring (D) which forms a rest for the hand, and has a flange which nearly touches the edge of the revolving disc and prevents specimens from falling into the catcher should they slip from the fingers.

When stretching paper or cloth upon the disc, the catcher (C) is removed and the disc (B) placed in the machine. The paper or cloth is placed on the disc (B) and the ring (D) pressed over the paper until it is about half-way down the edge of the disc (B). The spring garter is stretched over the edge. The ring (D) is now passed right down over the disc, and the garter is pressed home into the groove.

Should the disc at any time become so firmly fixed in the spindle that it cannot be removed by hand, a pair of lifting levers are supplied. The catcher is provided with a cover, and also with a tap for drainage. A drip can (H), for supplying water to the polishing disc, can be supplied if required.

Quotations for the machine, with motor for currents other than 230 A.C. as in No. 1290M, will be furnished on particulars being given of the electrical supply. The particulars required are the voltage, whether the current is direct or alternating, and in the latter case the phase, cycle, etc.

Levelling Device for Metal Specimens.

No. 3805. Levelling device ... ...

It will be realized that in preparing metal specimens it is of great importance to ensure that the polished surface is parallel to the glass slide upon which it is mounted. The No. 3805 levelling device provides a quick and reliable method of accomplishing this.

The specimen is affixed to the glass slide with a plastic mounting compound and the slide is placed upon the stage of the device. The plunger is then lowered upon the specimen, and hand pressure applied, by which it is accurately levelled upon the slide.

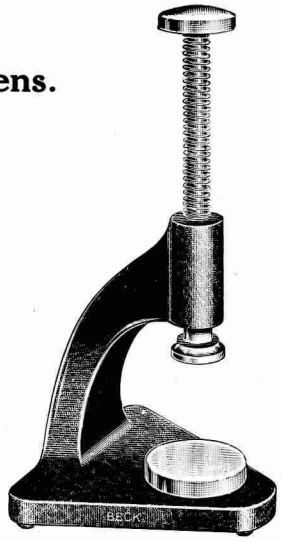

No. 3805.

Polishing Board.

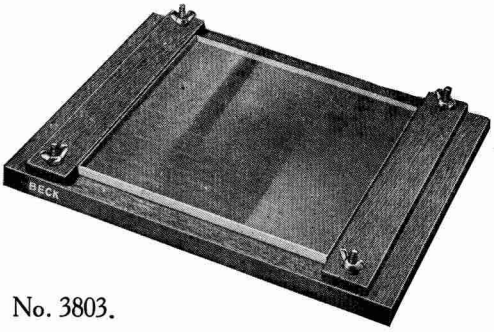

No. 3803.

No. 3803. Polishing board ... ...

This consists of a wooden base with a plate of glass 9 in. × 9 in. upon which a sheet of emery paper is stretched and held down by clamping strips. Thus, a polishing surface is provided which enables a uniformly flat specimen to be produced.

Grinding and Polishing Materials.

No. 1926.	Emery paper discs, 9 in. dia., for No. 1290 polishing machine	per doz.
No. 1927.	Broadcloth discs, 9 in. dia., for No. 1290 polishing machine	„ „
No. 1311.	Emery paper sheets, grades 1, 1/0, 2/0, 3/0, 4/0, 12 in. × 10 in.	„ „
No. 1312.	Selvyt polishing cloths, 10 in. × 10 in.	„ „
No. 1313.	Polishing rouge	per 250 gm.
No. 1314.	Diamantine	per 4 oz.
No. 1315.	Chromic oxide	„ „ „
No. 1316.	Tripoli...	per 500 gm.
No. 1317.	Magnesium oxide	„ „ „
No. 1318.	Emery powder, various grades	per 7 lb.
No. 1319.	Carborundum, various grades	per 1 lb.

Books.

No. 1421.	Biological Staining Methods	G. T. Gurr	
No. 1422.	Microscopic Objects, How to mount them	J. C. Johnson	
No. 1423.	Photography through the Microscope	Eastman Kodak Co.	
No. 1424.	Practical Photomicrography	R. F. E. Miller	
No. 1425.	The Microscope	T. Stephanides	
No. 1426.	The Intelligent Use of the Microscope	C. W. Olliver	
No. 1427.	The Use of the Microscope	R. Barer	
No. 1428.	Gem Testing	B. W. Anderson	

Automatic Rotary Microtome.

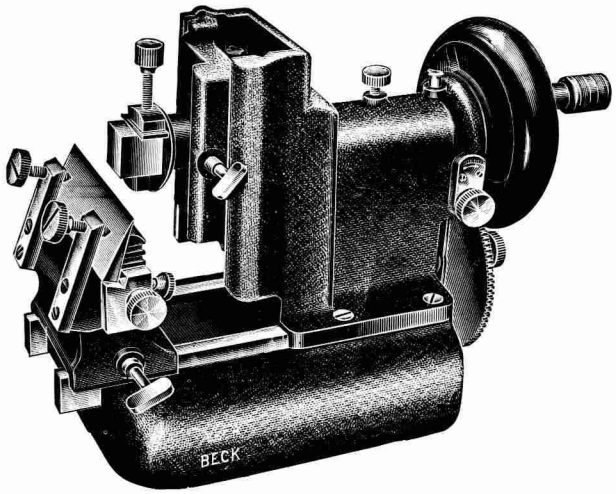

No. 3880.

No. 3880. Automatic rotary microtome ... ...
No. 3881. Knife blade 13 cm. length, 3 cm. width ... ...
No. 3882. Back for No. 3881 ... ...
No. 3883. Handle for No. 3881 ... ...
No. 3885. Knife blade 8.5 cm length, 2 cm. width ... ...
No. 3884. Wood blocks ... ... per doz.
No. 3886. Microtome knife strop, 12 in., leather, on wood base ... ...
No. 3887. Honing stone ... ...

The instrument is of very rigid design; it can be very quickly set up to cut a perfectly uniform series of sections at the highest possible speed. The object holder consists of a clamp with universal adjustment for the angle of face around a point coincident with the surface of a block of material of the average thickness, so that there is no lateral displacement when orientating. The clamp is adapted to take standard wood blocks 19 mm. × 19 mm. × 12 mm. The knife holder is provided with an adjustment for position with respect to the block surface. It is fitted with screws permitting the angle of the knife to be precisely adjusted. There is also an adjustment provided so that knives of varying widths can be employed. The micrometer slide for the feed is extremely heavy and is carried in channels in the base of the instrument. The micrometer screw is direct acting and the feed, consisting of one lever and pawl only, is cam operated and enclosed. Section thickness is arranged in steps, 2.5 μ, 5 μ, 7.5 μ, 10 μ, 12.5 μ, and 15 μ. The adjustment is made by a milled head on the front of the frame, and, if necessary, without stopping the machine. The finish of the frame of the instrument, knife holder and object holder is of crystalline enamel, the other parts being chromium plated.



No. 3602.

Hand Microtome.

No. 3602. Hand microtome ... ...
No. 3432. Razor, flat one side, for use with above ... ...

This microtome is used for cutting embedded sections by hand with a razor, the specimen being raised between each cut by means of the screw operated by a circular disc at the base of the instrument. The raising screw has 50 threads to the inch. It is constructed of solid brass, $1\frac{1}{2}$ in. diameter, with well $\frac{5}{8}$ in. diameter. Though simple in design, being solidly made, considerable accuracy can be obtained.

Fused Microscope Cells.

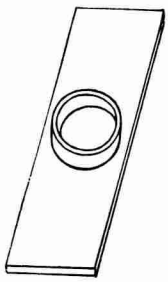
No. 1750.

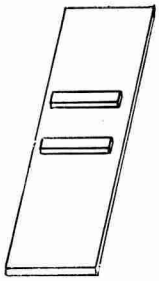
No. 1751.

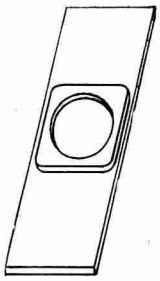
No. 1752.

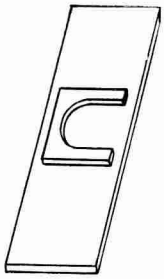
No. 1753

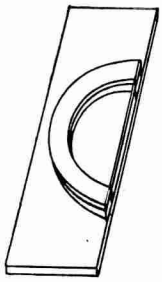
No. 1754.

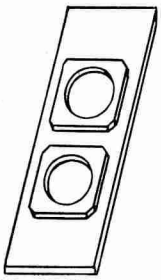
No. 1755.

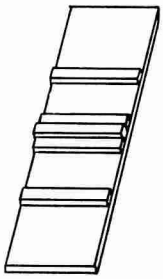
No. 1756.

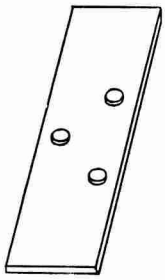
No. 1757.

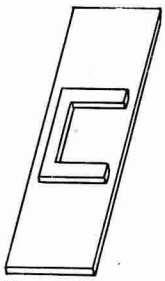
No. 1758.

No. 1750/8. Fused microscope cells ... ... each

These cells are invaluable for microscopic work. They can be used as moist chambers, hanging drop slides, comparison slides, separators and for containing pond life and other fluids. No cement is used in their manufacture, the glasses being fused together. They will, therefore, withstand the action of normal heat and acids for sterilizing purposes. When ordering please specify by number the particular pattern required.

Turntable.

No. 3386. Turntable ... ...

The general design of this can be seen from the illustration. It has hand rests on both sides of the turntable giving it stability in use. The turntable rotates in a ball bearing fitting. An arm is fitted for steadying the brush.

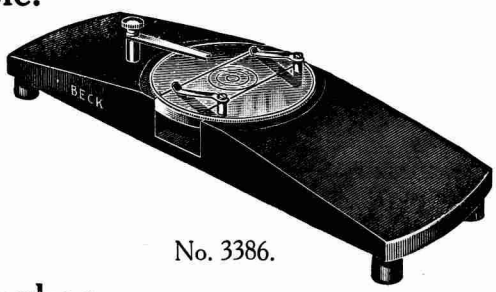

No. 3386.

Object Marker.



No. 3418.

No. 3418. Diamond object marker ... ...

This fits into the microscope like an object glass and has a diamond set eccentrically into it, so that a circle can be scribed upon the cover glass around any portion of the object which it is desired to mark. The diameter of the circle is adjustable in engraved steps of .01 inch to .1 inch.

Test Slide.

No. 3404. Slide with silver film with fine pinholes under cover glasses of three thicknesses, .006 in. (.15 mm.), .008 in.(.2mm.) and .01 in. (.25mm.) ...

Microscope Covers.

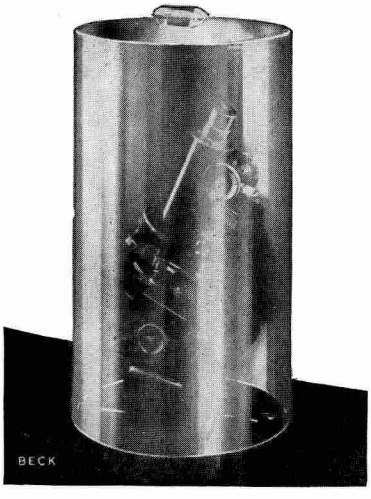

No. 3797.

No. 3797. Microscope cover rigid type, standard size 16 in. high × 10 in. dia., in plastic

No. 3796. Microscope cover flexible type, in P.V.C.

When it is impracticable to replace the microscope in its case after use, the instrument should be protected from dust. Two forms of cover are made. No. 3797 is rigid, made from plastic material and fitting as it does on to the surface of the bench, is a complete protection. It is of a suitable size to cover microscopes of the usual dimensions, but other sizes can be supplied and can be quoted for on receipt of specification. No. 3796 is a flexible cover and is quite satisfactory, although, not fitting so well at the base, is less effective than the rigid type.

Apertometer.

No. 3379. Apertometer ... ...

This simple form of apertometer consists of a thick glass plate with a scale of apertures, as illustrated, on its under surface. On the upper surface is an engraved cross. If this is focussed by means of the object glass, the numerical aperture of which it is desired to ascertain, an image of the scale will be formed near the back focal plane of the objective. The cross should be centred in the field of view. By removing the eyepiece and noting the divisions which can be seen at the margins of the field, the aperture is measured. An enlarged image, facilitating the reading of the divisions, can be obtained by using a low power objective in the thread provided in the lower end of the drawtube, with an eyepiece, forming a low power microscope.

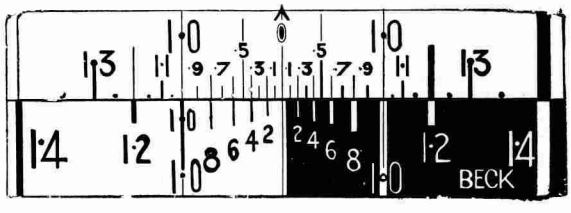

No. 3379.

Cedar Oil Bottle.

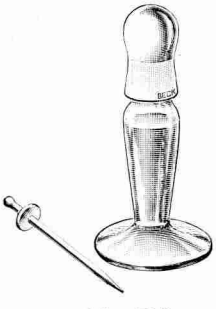

No. 760.

No. 760. Cedar oil bottle, with oil ... ...

No. 761. Sira immersion oil, 25 gr. bottle ... ...

This bottle, as illustrated, is of a convenient form for storing and applying immersion oil. It has a ground-on cap and dipper and has a base to minimise the risk of overturning, cedar wood oil being a material the spilling of which it is best to avoid. One of these bottles, with oil, is included with all microscope outfits containing immersion objectives.

Lens Cleaning Tissues.

No. 2693. Book of tissue ... ...

This tissue is specially recommended for cleaning glass surfaces, without danger of scratching. Each book has 24 sheets, 4 in. × 3 in.

Object Cabinets.

These cabinets accommodate the usual 3in. × 1in. slides. They are well made in seasoned oak or mahogany and are of excellent workmanship, special care being given to the fitting of the drawers. A glass panel is fitted into the door and lock and key are provided.

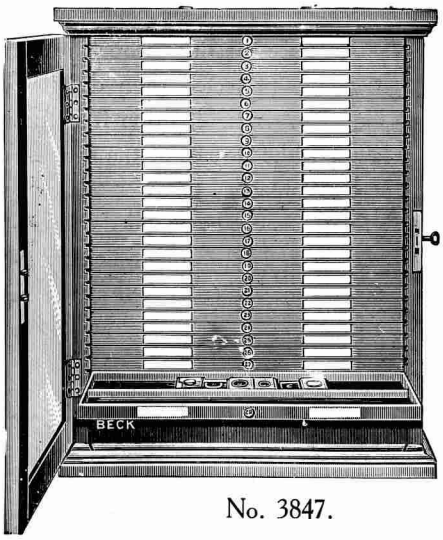

No. 3847.

No. 3843. In oak, 1000 slides ... ...
No. 3844. „ „ 2000 „ ... ...
No. 3845. „ „ 3000 „ ... ...
No. 3847. „ mahogany, 1000 slides ... ...
No. 3848. „ „ 2000 „ ... ...
No. 3849. „ „ 3000 „ ... ...

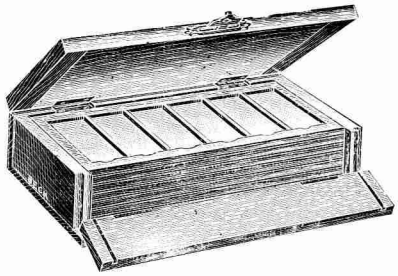

No. 3490.

Cabinet of polished pine, with trays as illustrated

No. 3490. To hold 3 doz. slides ... ...
No. 3491. To hold 6 doz. „ ... ...
No. 3492. To hold 12 doz. „ ... ...

Cabinet of rack type, well constructed throughout in wood, index provided in lid

No. 635. To hold 50 slides ... ...
No. 636. To hold 100 „ ... ...

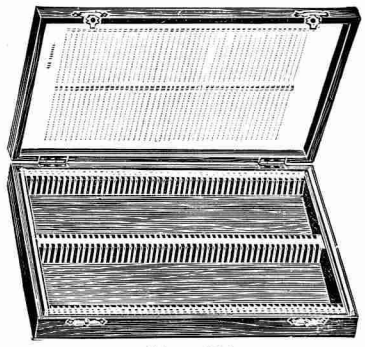

No. 636.

Slides and Cover Glass.

Slides are supplied in boxes of $\frac{1}{2}$ gross and cover glass in boxes of $\frac{1}{2}$ oz. Cover glass is available in $\frac{3}{4}$ in. and $\frac{7}{8}$ in. squares and circles. No. 3390 is available in a diameter of .74 in. for use in thermal precipitators.

No. 3828. **Slides** 3 in. × 1 in., extra thin, white ... ... per gross
No. 3830. „ „ „ „ half white ... ... „ „
No. 3831. „ „ thin, half white ... ... „ „
No. 3832. „ „ ordinary, half white ... ... „ „
No. 3405. **Slides** 3in. × 1 in., ground edges and excavated hollow ... ... „ doz.
No. 3390. **Cover glasses,** No. 1, average thickness ·006 in. circular ... ... „ oz.
No. 3391. „ „ „ „ „ square ... ... „ „
No. 3392. **Cover glasses,** No. 2, average thickness ·008 in. circular ... ... „ „
No. 3393. „ „ „ „ „ square ... ... „ „
No. 525. **Labels** for naming objects ... ... „ 100

Dissecting Instruments.



No. 3850.



No. 3863.



No. 3440.



No. 3860.

No. 3850.	Scalpels, all metal handles, sizes of blades 1¼ in. and 2 in.	each
No. 3856.	Scissors, straight, 5½ in.	,,
No. 3440.	Scissors, straight, 4½ in.	,,
No. 3439.	Scissors, straight, 4 in., very fine points	,,
No. 3858.	Forceps, straight, 5 in., blunt points	,,
No. 3860.	Forceps, straight, 4½ in., fine points and steady pin	,,
No. 3434.	Needles, straight, in rosewood handles with ferrule	,,
No. 3862.	Needles, triangular, in plain wooden handles	,,
No. 3863.	Needles, with one cutting edge	,,
No. 3864.	Needles, spear-headed	,,
No. 3431.	Blow-pipe with stilette	,,
No. 3432.	Razor, hollow-ground one side, flat other side	,,
No. 3448.	Section lifter, in aluminium	,,
No. 3442.	Seeker, in rosewood handle	,,
No. 3429.	Glass pipette, straight	,,
No. 3430.	Glass pipette, straight, with teat	,,

Set of Dissecting Instruments.

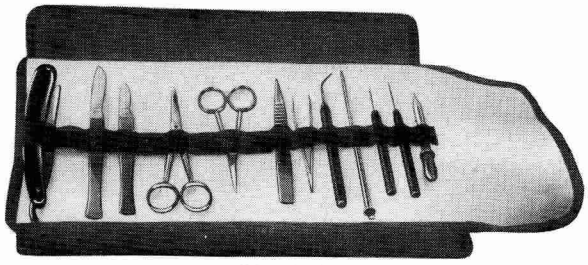

No. 3428A.

No. 3428. Roll-up kit, containing two pairs of scissors, two scalpels, razor, two pairs of forceps, seeker, two needles and pipette with teat ... ...

No. 3428A. As No. 3428 but with addition of blow-pipe ... ...

Watchmaker's Eyeglass.

No. 4654. Watchmaker's eyeglass. ... ...

This employs a bi-convex lens of good quality in a highly polished vulcanite mounting conveniently shaped.

Supplied in foci of 2 in., 3 in. and 4 in., which should be specified in ordering.



No. 4654.

INDEX

Abbe camera lucida 60
Abbe condensers 61, 62
Achromatic condensers 61, 62
„ magnifiers, dissecting 47
„ object glasses 49, 50
Aluminium surfaced mirror 83
Analyser (polarising) 59
Angular eyepiece 55
Apertometer 91
Aplanatic condensers 61, 62
Apochromatic object glasses 49, 51
Arm, dissecting 48

Bench microscope 23, 42
Binocular eyepiece 58
„ high-power microscopes 18-22
Books 88
Brinell testing microscope 38
Bullet comparison microscope 34, 35

Cabinets, object 92
Camera lucida 60
„ macroscopic 75, 76
„ photomicrographic 71-77
Cedar oil bottle 91
Cells, microscope, fused 90
Changer, objective 70
Colour screens 81
Comparator eyepiece 55
Comparison microscope 34, 35
Compensating eyepieces 54
Condenser, quartz substage 62
Condensers substage 61, 62
Cornex dissecting microscope 48
Cover glass 92
„ microscope 91
Crescent dissecting microscope 47
Crossline eyepiece 57

Dark ground illuminators 63
Davis shutter 53
Demonstration eyepiece 56
Depth measuring microscope 36
Diaphragm, nosepiece 53
Diaphragm, pinhole 53
Dissecting arm 48
„ instruments 93
„ magnifiers 47, 48
„ microscope Cornex 48
„ „ Crescent 47
Double nosepiece 70
Drawing prism 60
„ table 60

Eyeglass, watchmakers' 93
Eyepiece cameras 71, 72
„ crossline 57
„ micrometers 57
„ pinhole 56

Eyepieces 54-56
„ angular 55
„ binocular 58
„ comparator 55
„ compensating 54
„ demonstration 56
„ Erlich 56
„ goniometer 56
„ huygenian 54
„ micrometer 54, 55
„ projection 54
„ Ramsden 54
„ wide field 54

Filar micrometer eyepiece 55
Film measuring microscope 38
Filters, colour 81
Filters, ultra-violet 81
Fluorescence apparatus 83
Fluorite object glass 51
Focussing magnifiers 60
Forceps, stage 84
Fused microscope cells 90

Glass slides 92
Globe and circle graticule 57
Goniometer eyepiece 56
Graticules 57
Grinding and polishing machine 87
„ „ „ materials 88

Hand microtome 89
High power binocular eyepiece 58
„ „ „ microscopes 18-22

Illuminating bench 82
Illuminator, Beck-Chapman, opaque 67
„ dark ground 63
„ prism 69
„ stage 85
„ substage 64
„ thin glass 69
„ vertical 66-69
„ Wrighton-Beck metallurgical 68
Immersion oil 91

Labels 92
Laboratory metallurgical microscope 24-27
Lamps 75, 79-81, 83
Lens cleaning tissue 91
Levelling device 88
Light filters 81
London microscope, No. 10 and No. 15 43-46
„ „ No. 47 4-17
„ „ No. 48 18-22

INDEX (continued)

Macroscopic camera 75, 76
Magnifiers, dissecting 47, 48
„ focussing 60
Marker, object 90
Mechanical stages 84-86
Metallurgical objectives 50, 51
Micrometer eyepieces 54, 55
„ microscope 39, 40
Micrometers, eyepiece 57
„ stage 57
Micrometric microscope 37
Microscope, bench 23, 42
„ bench, metallurgical 23
„ Brinell testing 38
„ comparison 34, 35
„ Cornex dissecting 48
„ cover 91
„ Crescent dissecting 47
„ depth measuring 36
„ film measuring 38
„ Laboratory metallurgical 24-27
„ London No. 10 and No. 15 43-46
„ „ No. 47 4-17
„ „ No. 48 18-22
„ micrometer 39, 40
„ micrometric 37
„ petrological 32, 33
„ phase contrast 66
„ process 41
„ reflecting 28, 29
„ stress measurement 41
„ units 42
„ Universal No. 50 ... ... 30, 31
Micro-projection apparatus 78
Microstigmar lenses 76
Microtomes 89
Mirror, aluminium surfaced 83

Newton objective 53
Nosepiece, double, triple and quadruple 70
„ diaphragms 53

Object cabinets 92
„ glasses 49-53
„ marker 90
Objective changer 70
„ Newton 53
Objectives, reflecting 52
Opaque illuminator Beck-Chapman 67
Oil, immersion 91
Oil bottle 91

Patch stops 62
Petrological microscope 32, 33
„ objectives 50
Phase contrast apparatus 65, 66
Photomicrographic cameras 71-77
Pinhole diaphragm 53
Pinhole, eyepiece 56
Polarising apparatus 59,69
Polaroid 59
Polishing board 88
„ machine 87
„ materials 88
Prism, drawing 60
Process microscope 41
Projection eyepieces 54
Projector, micro 78

Quadruple nosepiece 70
Quartz, condenser, substage 62

Ramsden eyepieces 54
Reflecting microscope 28-29
„ objectives 52
Rotary microtome 89
Rotating stages 85, 86

Screens, colour 81
Selenite 59
Silver film slide 90
Slides, glass 92
Stage, forceps 84
„ illuminator 85
„ micrometers 57
„ warm 85
Stages, mechanical 84-86
„ micrometric 84
„ revolving 85, 86
Stops, patch 62
Strain-free objectives 50
Stress measurement microscope 41
Substage condensers 61, 62
„ illuminator 64
Super-stage revolving 85

Table drawing 60
Test slide 90
Tissue, lens cleaning 91
Topley top stage 84
Triple nosepiece 70
Trough, glass 90
Turntable 90

Ultra violet filter 81
Universal microscope 30, 31

Vertical illuminator 66-69

Warm stage 85
Wave plates 59
Watchmaker's eyeglass 93
Wedges, quartz 59
Wrighton-Beck vertical illuminator 68
Wrighton illuminating bench 82

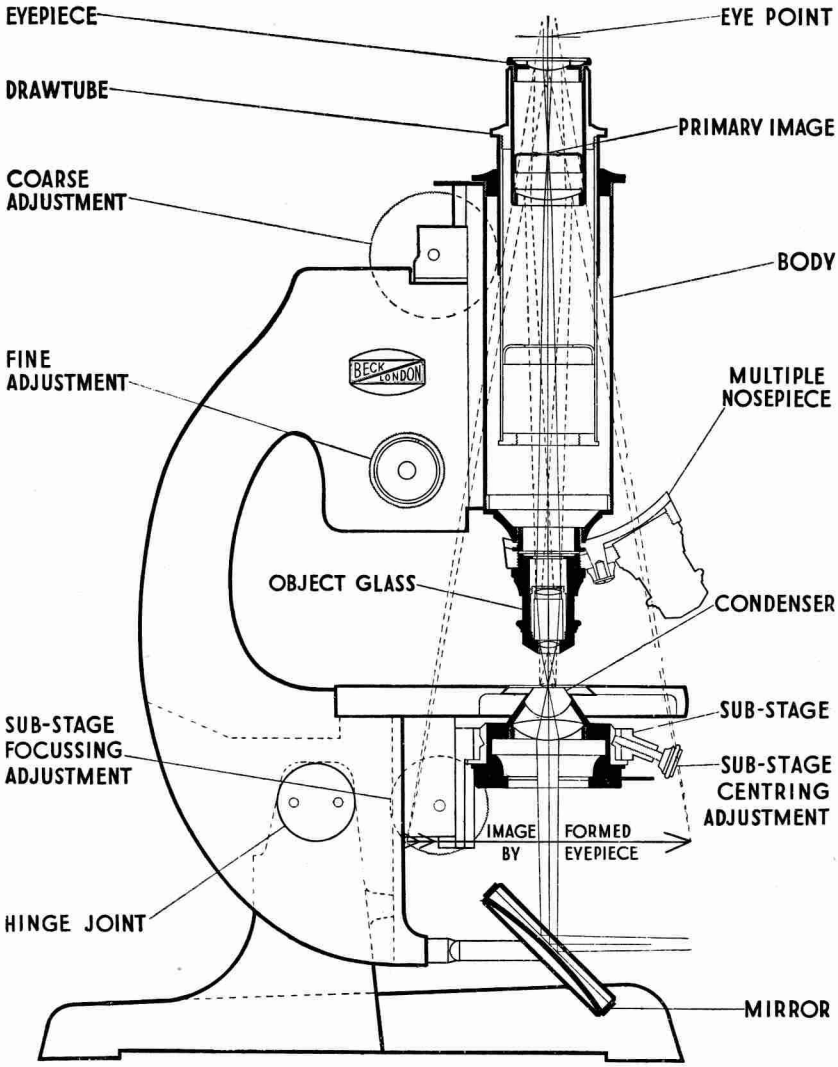

DIAGRAMMATIC DETAILS OF THE BECK MICROSCOPE

The above is a facsimile of a wall-chart, mounted on board, size 32″ x 22″, which we have published. It is in 3 colours and shows a sectional view of a microscope with a trace of rays through the instrument. We shall be pleased to send one or more copies of this, carriage free to any institution to whom it would be of service.

RECEIVED 2-1-58.



BECK

MICROSCOPES

PRICE SUPPLEMENT

PRICES ADVANCED 10%

R. & J. BECK, Ltd.
LONDON, ENGLAND.

Head Office & Showroom: 69/71, Mortimer Street, W.1.
Telephone : MUSeum 9696 (Private Branch Exchange).
Telegrams : "OBJECTIVE, WESDO, LONDON."

Factories:
Kentish Town, London, N.W.5 & Watford, Herts.

June, 1956

NOTES.

* Denotes Purchase Tax extra (Home market).

‡ No. 3235 includes oil bottle with dipper and supply of cedar wood oil.

‡ No. 3251 does not include oil bottle and cedar wood oil. If supplied 5s. should be added.

Page 7.	No. 47A (1) ...	£38	10	0
	„ 47A (2) ...	41	5	0
	„ 47B (1) ...	48	7	6
	„ 47B (2) ...	58	0	0
	„ 47B (3) ...	71	10	0
	„ 3818 extra		15	0
	„ 3779 ...	6	12	6
Page 9.	No. 47C (1) ...	£51	7	6
	„ 47C (2) ...	61	10	0
	„ 47C (2A) ...	69	0	0
	„ 47C (3) ...	98	12	6
	„ 47C (4) ...	117	10	0
	„ 3818 extra		15	0
	„ 1820/22 3 fittings extra	8	7	6
	„ 1820/22 4 fittings extra	10	5	0
Page 11.	No. 47L (1) ...	£77	2	6
	„ 47L (2) ...	87	10	0
	„ 47L (2A) ...	95	0	0
	„ 47L (3) ...	111	2	6
	„ 47L (4) ...	169	17	6
	„ 47L (5) ...	130	5	0
	„ 3818 extra	1	0	0
	„ 1820/22 3 fittings extra	8	7	6
	„ 1820/22 4 fittings extra	10	5	0
	„ 3513/4 ...	19	0	0
Page 13.	No. 47P (1) ...	£85	12	6
	„ 47P (2) ...	95	10	0
	„ 47P (3) ...	103	0	0
	„ 47P (4) ...	113	10	0
	„ 47P (5) ...	119	10	0
	„ 47P (6) ...	189	10	0
	„ 47P (7) ...	138	12	6
	„ 3818 extra	1	0	0
	„ 3750 ...	4	0	0
	„ 3752 ...	4	0	0
	„ 1820/22 3 fittings extra	8	7	6
	„ 1820/22 4 fittings extra	10	5	0
	„ 3779 ...	6	12	6
Page 15.	No. 47H (1) ...	£88	7	6
	„ 47K (1) ...	130	5	0
	„ 47K (2) ...	142	10	0
	„ 47K (3) ...	188	12	6
	„ 47K (4) ...	200	17	6
	„ 47K (5) ...	163	10	0
	„ 3754 extra	3	10	0
	„ 3818 extra	1	0	0
Page 17.	No. 47CI (2) ...	£69	10	0
	„ 47CI (2A) ...	77	0	0
	„ 3305 ...	13	10	0
	„ 47LI (2A) ...	103	0	0
	„ 47LI (4) ...	138	5	0
	„ 3818 extra	1	0	0
	„ 1820/22 3 fittings extra	8	7	6
	„ 1820/22 4 fittings extra	10	5	0
Page 21.	No. 48C ...	£67	15	0
	„ 48L ...	93	15	0
	„ 48P ...	101	15	0
	„ 48H ...	78	15	0
	„ 48K ...	112	15	0
	„ 48CI ...	81	15	0
	„ 48LI ...	107	15	0
	„ 48PI ...	115	15	0
	„ 48HI ...	92	15	0
	„ 48KI ...	126	15	0
	„ 1344 ...	5	0	0
	Reduction for Mono only ...	27	10	0
	No. 1346 ...	32	10	0
	„ 3305 ...	13	10	0
	„ 3305A ...	22	0	0
	„ 3752 ...	4	0	0
	„ 3750 ...	4	0	0
	„ 3754 ...	3	10	0
Page 22.	Set G	£38	5	0
	„ M	80	10	0
	„ N	83	10	0
	„ K	105	5	0
	„ L	155	17	6
	No. 1820/22 3 fittings extra	8	7	6
	No. 1820/22 4 fittings extra	10	5	0
Page 23.	No. 3226A ...	£67	15	0
	„ 3226C ...	84	15	0
	„ 4960A ...	3	10	0
	„ 2159 ...	10	0	0
	„ 2160 ...	6	2	6
	„ 2161		12	6*
	„ 3632 ..	4	5	0

Page 27.	No. 3228 ...	£70	0 0
	„ 3228C ...	127	5 0
	„ 3228D ...	185	10 0
	„ 3228B ...	104	10 0
	„ 3228BC ...	164	5 0
	„ 3228BD ...	233	12 6
	„ 1344 ...	5	0 0
	„ 1345 ...	14	0 0
	„ 3752 extra	4	0 0
	„ 3205 extra	5	12 6
	„ 2278 extra	6	12 6
	„ 1193 extra	18	17 6
	„ 3513 extra	15	0 0
	„ 3514 extra	15	0 0
	„ 3944 ...	110	15 0
Page 29.	No. 4196 ...	£154	0 0
	„ 4197 ...	35	0 0
	„ 4199 ...	4	10 0
	„ 4202 ...	9	0 0
Page 33.	No. 5000 ...	£82	10 0
	„ 5005 ...	17	10 0
	„ 5010 ...	7	10 0
Page 35.	No. 2122 ...	£255	0 0
	„ 3654 ...	13	10 0
	„ 3517 ...		8 9*
	„ 3655 ...		10 0*
Page 36.	No. 2414 ...	£77	10 0
	„ 2416 ...	5	15 0
	„ 2417 ...	8	0 0
	„ 2418 ...	8	0 0
	„ 2415 ...	4	0 0
	„ 2160 ...	6	2 6
	„ 2161 ...		12 6*
Page 37.	No. 3523 ...	£82	0 0
	„ 2278 ...	6	12 6
	„ 3750 ...	4	0 0
	„ 3264 ...	2	7 6
Page 38.	No. 1772 ...	£47	10 0
	„ 1773 ...	4	7 6
	„ 1775 ...	15	0 0
	„ 1776 ...	15	0 0
Page 40.	No. 3187 ...	£123	0 0
	„ 3187A ...	128	0 0
	„ 3189 ...	123	0 0
	„ 3189A ...	128	0 0
	„ 3188 ...	3	0 0
	„ 1193/2160	25	17 6
	„ 3546 ...	8	0 0
Page 41.	No. 3186 ...	£13	12 6
	„ 3186A ...	14	7 6
	„ 3186B ...	15	0 0
	„ 3320 ...	3	0 0
	„ 2294 ...	55	0 0
	„ 2296 ...	6	0 0
	„ 2295 ...	3	0 0
Page 42.	No. 3195A ...	£15	12 6
	„ 3195M ...	15	7 6
	„ 3224 ...	3	0 0
	„ 2307 ...	2	17 6
	„ 2308 ...	7	0 0
Page 46.	No. 10A & 15A ...	£16	12 6
	„ 10E & 15E ...	18	10 0
	„ 10AL & 15AL	21	17 6
	„ 10C & 15C	25	15 0
	„ 10D & 15D	30	10 0
	„ 2983 ...	5	5 0
	„ 2984 ...		2 3*
	„ 3230A ...	2	10 0
	„ 3815 ...	2	15 0
	„ 3815A ...	3	0 0
	„ 3310 ...		17 6
	„ 3308 ...	1	0 0
	„ 3286 ...	3	17 6
	„ 3796 ...		10 0
Page 47.	No. 3020 ...	£7	17 6
	„ 3021 extra	1	5 0
	„ 3022 ...	2	15 0
	„ 3171D ...	2	10 0
	„ 3183D ...	2	15 0
	„ 3172D ...	3	0 0
	„ 3173D ...	3	5 0
Page 48.	No. 33B ...	£2	10 0
	„ 3018 ...	2	0 0
	„ 3170D ...	1	0 0
	„ 3168D ...	1	5 0
Page 50.	No. 3010b ...	£2	0 0
	„ 3011b ...	2	0 0
	„ 3230a ...	2	15 0
	„ 3230 ...	4	15 0
	„ 3238 ...	3	5 0
	„ 3038 ...	4	10 0
	„ 3231a ...	2	12 6
	„ 3231 ...	4	2 6
	„ 3232 ...	7	10 0
	„ 3239 ...	11	0 0
	„ 3234a ...	6	12 6
	„ 3234 ...	8	10 0
	„ 3251 ...	9	12 6‡
	„ 3235 ...	13	15 0‡

ANCED 10%

Page 50. *contd.*	„	3230M	...	5 17 6
	„	3038M	...	4 7 6
	„	3231M	...	5 5 0
	„	3232M	...	9 0 0
	„	3234M	...	10 0 0
	„	3235M	...	15 15 0
	„	3230F	...	6 0 0
	„	3038F	...	5 12 6
	„	3231F	...	5 5 0
	„	3232F	...	9 7 6
	„	3239F	...	13 15 0
	„	3234F	...	10 12 6
	„	3235F	...	17 5 0
	„	3008	...	3 5 0
	„	3009	...	2 5 0
Page 51.	No.	3240	...	£11 15 0
	„	3241	...	14 5 0
	„	3242	...	19 15 0
	„	3244	...	22 5 0
	„	3245	...	25 0 0
	„	3247	...	28 17 6
	„	3248	...	36 0 0
	„	3036	...	18 15 0
	„	3037	...	18 15 0
	„	3240M	...	13 0 0
	„	3241M	...	15 15 0
	„	3242M	...	22 0 0
	„	3244M	...	24 5 0
	„	3247M	...	31 0 0
	„	3248M	...	37 10 0
	„	3036M	...	20 15 0
Page 52.	No.	4039	...	£38 0 0
	„	4049	...	45 0 0
	„	4038	...	40 0 0
	„	4035	...	40 0 0
	„	4047	...	75 0 0
Page 53.	No.	2285	...	£22 2 6¶
	„	2286	...	22 2 6¶
	„	3358	...	2 0 0
	„	3482	...	1 5 0
Page 54.	No.	3688	...	£1 5 0
	„	3260	...	1 5 0
	„	3689	...	1 5 0
	„	3261	...	1 5 0
	„	3262	...	1 10 0
	„	3097	...	2 0 0
Page 54. *contd.*	„	3798	...	2 0 0
	,	3263	...	2 7 6
	„	3264	...	2 7 6
	„	3684	...	4 10 0
	„	3687	...	4 10 0
	„	3266	...	4 7 6
	„	3267	...	4 7 6
	„	3268	...	4 12 6
	„	3269	...	4 12 6
	„	3270	...	5 15 0
	„	3271	...	8 15 0
	„	3787	...	4 10 0
	„	3788	...	4 10 0
	„	3503	...	2 5 0
	„	3502	...	2 5 0
	„	3773	...	4 10 0
	„	3774	...	4 10 0
	„	3775	...	4 10 0
Page 55.	No.	3259	...	£25 15 0
	„	3276A	...	22 17 6
	„	3779	...	6 12 6
Page 56.	No.	3778	...	£18 10 0
	„	3258	...	18 10 0
	„	3419	...	17 6
	„	3256	...	5 0 0¶
Page 57.	No.	3277	...	£2 0 0
	„	3278	...	2 0 0
	„	3806	...	2 10 0
	„	3807	...	2 10 0
	„	3276	...	1 0 0
	„	3810	...	1 0 0
	„	3811	...	1 2 6
	„	3812	...	1 2 6
	„	3279	...	1 2 6
	„	3808	...	1 12 6
	„	3809	...	3 0 0
	„	3265	...	10 0
Page 58.	No.	3780	...	£29 10 0
	„	3781	...	34 0 0
	„	3260b	...	4 0 0
	„	3261	...	2 10 0
Page 59.	No.	2373	...	£5 2 6
	„	2374	...	2 15 0
	„	2375	...	3 15 0
	„	2376	...	4 2 6
	„	2377	...	9 0 0
	„	2384	...	3 0 0
	„	2385	...	4 10 0

Page 59. *contd.*	„ 3351A	...	6	10	0
	„ 3351	...	6	0	0
	„ 3350A	...	8	0	0
	„ 3350	...	10	0	0
	„ 3059	...	3	0	0
	„ 3997	...	2	10	0
	„ 3998	...	2	5	0
Page 60.	No. 3370	...	£9	15	0
	„ 3375	...	1	12	6
	„ 3662	...	2	15	0
	„ 2271	...	12	10	0
	„ 2272	...	2	5	0
Page 62.	No. 3286	...	£3	17	6
	„ 3220	...	7	10	0
	„ 3288	...	11	15	0
	„ 3645	...	14	15	0
	„ 3291	...	16	0	0
	„ 3649	...	5	17	6
	„ 3666	...	28	15	0
	„ 3286P	...	1	0	0
	„ 3220P	...	1	0	0
	„ 3288P	...	1	0	0
	„ 3645P	...	1	0	0
	„ 3291P	...	1	0	0
Page 63.	No. 3293	...	£12	0	0
	„ 3294	...	14	10	0
	„ 3296	...	6	10	0
	„ 3297	...	9	0	0
Page 64.	No. 2094	...	£9	10	0
	„ 2097	...	9	10	0
	„ 2095	...	4	10	0
	„ 2096	...		4	0
Page 65.	No. 1997	...	£24	10	0
	„ 3231P	...	11	17	6
	„ 3232P	...	14	5	0
	„ 3234P	...	15	15	0
	„ 3235P	...	20	10	0
	„ 1822	...	2	7	6
	„ 3482	...	1	5	0
	„ 2007	...	3	15	0
Page 66.	No. 2013/4VP	...	£63	10	0
	„ 2016	...	2	5	0
	„ 3231VP	...	15	10	0
	„ 3232VP	...	18	5	0
	„ 3234VP	...	19	15	0
	„ 3235VP	...	25	0	0
	„ 2281	...	158	0	0
Page 67.	No. 2340	...	£18	10	0
	„ 2341	...	5	5	0
	„ 2342	...	7	10	0
	„ 2343	...	11	0	0
	„ 2344	...	13	15	0
	„ 2159	...	10	0	0
	„ 2160	...	6	2	6
	„ 2161	...		12	6*
Page 68.	No. 1193	...	£19	15	0
	„ 2159	...	10	0	0
	„ 2160	...	6	2	6
	„ 2161	...		12	6*
Page 69.	No. 4960	...	£7	0	0
	„ 4960A	...	3	10	0
	„ 4964	...	12	17	6
	„ 4960A	...	3	10	0
	„ 2095	...	4	10	0
	„ 2096	...		4	0
	„ 4961	...	10	10	0
	„ 4960A	...	3	10	0
Page 70.	No. 1820	...	£2	5	0
	„ 1821	...	2	5	0
	„ 1822	...	2	7	6
	„ 3300	...	2	15	0
	„ 3301	...	3	0	0
	„ 3302	...	3	7	6
	„ 3272	...		2	6
Page 71.	No. 3657	...	£37	0	0
	„ 3658	...		7	6*
	„ 3654	...	13	10	0
	„ 3655	...		10	0*
Page 72.	No. 4214	...	£55	0	0
	„ 4215	...	20	0	0
Page 73.	No. 2259	...	£67	10	0
	„ 2259A	...	67	10	0
	„ 3655	...		10	0*
	„ 3656	...		10	0*
	„ 3659	...	3	7	6*
	„ 2271	...	12	10	0
Page 74.	No. 3516L	...	£20	5	0
	„ 3517	...		8	9*
	„ 2276	...	4	15	0

ANCED 10%

Page 75.	No. 2261	...	£53	0	0
	„ 2314	...	83	0	0
	„ 2270	...	6	7	6
	„ 2255	...		5	0*
Page 76.	No. 2266	...	£35	0	0
	„ 2269	...		19	0*
	„ 2262	...	10	10	0
	„ 2324	...	10	10	0
	„ 2263	...	10	10	0
	„ 2268	...	10	10	0
	„ 2267	...	10	10	0
	„ 2264	...	5	5	0
	„ 2325	...	5	10	0
	„ 2265	...	5	15	0
Page 77.	No. 2274 Price on application.				
Page 78.	No. 4972	...	£82	15	0
	„ 4972A	...	87	15	0
	„ 4973	...	43	2	6
	„ 4974	...	15	0	0
Page 79.	No. 3516	...	£19	15	0
	„ 3517	...		8	9*
	„ 3336A	...	4	0	0
Page 80.	No. 3330	...	£13	5	0
	„ 3331	...	26	10	0
	„ 3332	...	23	10	0
	„ 3680	...	1	15	0
	„ 3681	extra	3	0	0
	„ 3334	...	1	13	0*
	„ 3335	...	1	13	0*
	„ 3625	...	2	7	6
	„ 3626	...		3	0
Page 81.	No. 3344	...	£15	10	0
	„ 3344T	...	8	7	6
	„ 3389	...	14	0	0
	„ 3344B	...	5	12	6
	„ 3344A	extra	2	0	0
	„ 3682	extra	3	0	0
	„ 3344D	...		5	0*
	„ 2187	...		7	6
	„ 2189	...		17	6
	„ 2191	...		7	6
	„ 2193	...		17	6
	„ 2196	...	5	17	6
Page 82.	No. 2364	...	£79	0	0
	„ 2365	...	79	0	0
Page 83.	No. 3627 Price on application.				
	„ 3628	...	£4	5	0
	„ 3678	...	4	2	6
	„ 3742	...	105	0	0
	„ 3743	extra	10	0	0
	„ 1810	...	2	2	6
Page 84.	No. 3513	...	£40	0	0
	„ 3514	...	40	0	0
	„ 3750	...	4	0	0
	„ 3422	...	2	7	6
Page 85.	No. 3545	...	£11	7	6
	„ 3457	...	3	12	6
	„ 3608	...	3	15	0
	„ 1731	...	2	15	0
	„ 2096	...		4	0
	„ 3387	...	19	5	0¶
Page 86.	No. 3515	...	£27	10	0
	„ 3305	...	13	10	0
	„ 3305A	...	22	0	0
	„ 3306	...	45	0	0
Page 87.	No. 1290	...	£45	0	0
	„ 1290M	...	58	0	0
	„ 1291	...	5	0	0
	„ 1292	...	3	5	0
	„ 1293	...	3	5	0
Page 88.	No. 3805	...	£3	10	0
	„ 3803	...	2	0	0
	„ 1926	...		5	0
	„ 1927	...		18	0
	„ 1311	...		4	0
	„ 1312	...	2	5	0
	„ 1313	...		12	6
	„ 1314	...		5	6
	„ 1315	...		3	0
	„ 1316	...		7	6
	„ 1317	...		12	6
	„ 1318	...		7	6
	„ 1319	...		7	6
	„ 1421	...		5	0
	„ 1422	...		6	0
	„ 1423	...		4	6
	„ 1424	...		5	0
	„ 1425	...		10	6
	„ 1426	...		15	0
	„ 1427	...		6	0
	„ 1428	...	1	1	0

PRICES ADVANCED 10%

Page 98.	No. 3880,	...	£47 10 0
	„ 3881	...	7 2 6
	„ 3882	...	2 0 0
	„ 3883	...	2 0 0
	„ 3885	...	6 0 0
	„ 3884	...	5 0
	„ 3886	...	17 6*
	„ 3887	...	1 12 6
	„ 3602	...	2 0 0
	„ 3432	...	9 6
Page 90.	No. 1750/8	...	7 6
	„ 3386	...	£3 17 6
	„ 3418	...	5 15 0
Page 91.	No. 3797	...	£4 15 0¶
	„ 3796	...	10 0
	„ 3379	...	1 17 6
	„ 760	...	7 6
	„ 761	...	4 6
	„ 2693	...	1 0
Page 92	No. 3843	...	£19 10 0
	„ 3844	...	38 0 0
	„ 3845	...	56 0 0
	„ 3847	...	18 10 0
	„ 3848	...	36 0 0
	„ 3849	...	54 0 0
Page 92. *contd.*	„ 3490	...	1 0 0
	„ 3491	...	1 10 0
	„ 3492	...	2 2 6
	„ 635	...	7 6
	„ 636	...	9 0
	„ 3828	...	17 6
	„ 3830	...	12 6
	„ 3831	...	10 0
	„ 3832	...	8 6
	„ 3405	...	7 6
	„ 3390	...	17 6
	„ 3391	...	13 0
	„ 3392	...	14 0
	„ 3393	...	10 0
	„ 525	...	6
Page 93.	No. 3850	...	4 6
	„ 3856	...	7 0
	„ 3440	...	6 6
	„ 3439	...	7 0
	„ 3858	...	4 6
	„ 3860	...	4 6
	„ 3434	...	6
	„ 3862	...	1 0
	„ 3863	...	1 0
	„ 3864	...	1 0
	„ 3431	...	1 6
	„ 3432	...	9 6
	„ 3448	...	1 0
	„ 3442	...	6
	„ 3429	...	3
	„ 3430	...	6
	„ 3428	...	£2 7 6
	„ 3428A	...	2 9 0
	„ 4654	...	5 0