

BECK MICROSCOPES

R. & J. BECK, Ltd.
LONDON, ENGLAND.

Head Office & Showroom: 69, Mortimer Street, W.1.
Telephone : MUSeum 9696 (Private Branch Exchange).
Telegrams : "OBJECTIVE, WESDO LONDON."

Factories:
London, N.W.5 & Watford, Herts.

1951

BUSINESS TERMS.

All prices are strictly nett for cash.

Payment should be made by cash with order where no account has been opened in our ledgers. Where it is desired that a ledger account be opened, London references should accompany order to prevent delay.

All goods and experimental models made to order must be paid for half in advance and half on delivery We take no responsibility as to the performance of experimental models.

Prices are subject to alteration on account of fluctuation in cost of labour and materials.

All goods are carefully packed, and a charge is made for packing cases, which, when returned empty, carriage paid, will be credited at full price if in good condition.

Goods are delivered free in the Central London district only, and are sent carriage paid elsewhere, carriage being charged on invoice.

We do not hold ourselves in any way responsible for damage to goods in transit, although every care is expended in the packing. Our risk terminates on the goods leaving our London warehouse We can insure goods at customer's expense if instructed to do so.

We cannot consider complaints as to the execution of any order unless lodged within seven days of the receipt of the goods.

Code.—In cabling or telegraphing orders it is only necessary to quote catalogue number.

It should be borne in mind in ordering goods to be sent abroad that they are liable to be delayed in transit, he orders should be placed sufficiently in advance to allow for this.

This catalogue cancels previous lists.

FOREWORD.

This catalogue describes the range of microscopes which we produce, with the exception of low power binoculars which are described in a separate list. It will be seen that the instruments cover a very wide range of work. Several new types have recently been added, notably the reflecting and the No. 50 Universal microscopes. The reflecting objectives are a completely new development, and one which is causing much interest among workers in certain fields. The special microscope stand designed for use with these enables the advantages of the objectives to be fully exploited. The No. 50 Universal microscope presents a complete apparatus for visual and photographic work by all methods of illumination, and by reason of its many new and unique features, it provides an instrument capable of any type of research work of the most exacting character.

In addition to this catalogue, the following publications connected with microscopy are available to anyone interested and will be sent on request :—

Low power binocular microscopes.

No. 50 Universal microscope.

Phase contrast apparatus.

Catalogues of other instruments which we manufacture will also be sent upon application. These comprise :—

Spectroscopes.

Magnifiers.

Projectograph (opaque projector.)

We also undertake the manufacture of optical units and components in optical glass, quartz, Iceland spar and fluorite, and shall be pleased to furnish quotations for these on receipt of specifications.

Beck instruments incorporate the knowledge acquired in over a century of manufacturing and will be found to maintain a standard of the very highest order.

BRITISH THROUGHOUT

No. 10 London Microscope.



Stand No. 10.

No. 10 London Microscope.

The No. 10 microscope is a simple instrument, suitable for use where high powers are not employed. It is eminently suitable for use in schools, due to its economic price and robust construction. It is also a most satisfactory instrument for industrial work and workshop use of a simple nature. The instrument is of full size, being approximately twice that shown in the illustration.

The microscope is of the vertical type, without joint for inclination and with one focussing adjustment by means of a specially cut rack and pinion giving very smooth motion, free from backlash, capable of focussing object glasses up to $\frac{1}{6}$ in. (4 m/m.). The base with the handle shaped limb is made in a solid casting, giving great rigidity. The stage is square, and is provided with stage clips for holding specimens. The body tube has an adjustable drawtube. The mirror is plane on one side and concave on the other, and is held in gimbals. The instrument is finished in acid resisting stoved black enamel.

The eyepieces and object glasses are of our standard series.

For the accommodation of iris diaphragm or substage condenser, a cylindrical substage can be supplied.

No. 10A. Stand ... ...

Nos. 3260/1. 2 Eyepieces, 42 m/m. (×6) and 25 m/m. (×10) ...

No. 3231A. $\frac{2}{3}$ in. Object glass, 16 m/m. without box ... ...

No. 10B. Stand ... ...

No. 3260. Eyepiece, 42 m/m. (×6) ... ...

No. 3231A. $\frac{2}{3}$ in. Object glass, 16 m/m. without box ... ...

No. 3234A. $\frac{1}{6}$ in. Object glass, 4 m/m. without box... ... ...

No. 10C. Stand ... ...

Nos. 3260/1. 2 Eyepieces, 42 m/m. (×6) and 25 m/m. (×10) ...

No. 3231A. $\frac{2}{3}$ in. Object glass, 16 m/m. without box ... ...

No. 3234A. $\frac{1}{6}$ in. Object glass, 4 m/m. without box ... ...

No. 3300. Double nosepiece ... ...

No. 3815. Oak case with lock and key ... ...

No. 3310. Cylindrical substage ... ...

No. 3308. Iris diaphragm ... ...

No. 3286. Abbe condenser and iris diaphragm ... ...

Any apparatus can be added or omitted at a corresponding addition or reduction of price.

No. 15 London Microscope.



Stand No. 15

No. 15 London Microscope.

This microscope is similar to the No. 10 as described on page 5, but the main limb is so made as to give the microscope a permanent inclination, which is found to give a more comfortable position to the user. The stage is necessarily inclined, so that, when liquids in troughs are used, it is not so satisfactory as the vertical microscope (No. 10).

Owing to its economical price, it is a most suitable instrument for use in schools, where, although a simple instrument, it is capable of all classes of work likely to be undertaken.

The illustration shows the instrument approximately half size.

No. 15A Stand ... ...

Nos. 3260/1. 2 Eyepieces, 42 m/m. (×6) and 25 m/m. (×10) ...
No. 3231A. $\frac{2}{3}$ in. Object glass, 16 m/m. without box... ... ...

No. 15B Stand ... .

No. 3260. Eyepiece, 42 m/m. (×6) ... ...
No. 3231A. $\frac{2}{3}$ in. Object glass, 16 m/m. without box ... ...
No. 3234A. $\frac{1}{6}$ in. Object glass, 4m/m. without box ... ...

No. 15C Stand ... ...

Nos. 3260/1. 2 Eyepieces, 42 m/m. (×6) and 25 m/m. (×10) ...
No. 3231A. $\frac{2}{3}$ in. Object glass, 16 m/m. without box ... ...
No. 3234A. $\frac{1}{6}$ in. Object glass, 4 m/m. without box ... ...
No. 3300. Double nosepiece ... ...

No. 3815. Oak case with lock and key ... ...
No. 3310. Cylindrical substage ... ...
No. 3308. Iris diaphragm ... ...
No. 3286. Abbe condenser and iris diaphragm ... ...

Any apparatus can be added or omitted at a corresponding addition or reduction of price.

No. 47 London Microscope.

The No. 47 series of microscopes constitute an advance in microscope design and manufacture which will be appreciated by all users of these instruments.

Very great strides have taken place in instrument practice during the last few years. New and improved machinery is available and new processes have been perfected. Full advantage has been taken of these improvements in the production of this microscope. Precision in both mechanical and optical work has advanced to a higher standard of recent years and the No. 47 Microscope has been designed in every detail to conform to these enhanced standards. The manufacture throughout is of the most precise nature, working to the finest limits, so that the highest possible accuracy in the adjustments, and hence perfection in performance is attained.

The optical performance of the object glasses, eyepieces, condensers and illuminators has always been a feature of Beck microscopes, and new computations and improved methods of accurate manufacture and adjustment have enabled the performance of the present product to be improved still further.

The general shape of the instrument has been given great consideration and the result has been to produce an instrument of a perfectly balanced design, which will give the greatest stability in all positions from the vertical to the horizontal. The limb is so shaped as to form a handle by which the instrument may be moved without risk of any damage to the adjustments. The limb, base and stage have been designed also to give the greatest possible rigidity and freedom from flexure. Absence of any such defect is essential in an instrument capable of using high magnifying powers, and the No. 47 is particularly satisfactory in this respect. The positions of the milled heads operating the coarse and fine adjustments, the substage focussing and the mechanical stage are arranged to give the best possible accessibility and therefore, the greatest ease in working.

Great care is taken in the finishing of all parts of the instrument, both from the point of view of appearance and durability. The enamels used give a very hard surface which will be found serviceable with prolonged use. All plated parts are chromium. The whole instrument is "tropicalized" and with due care no deterioration should occur even in the worst climatic conditions.

The No. 47 London microscope comprises a range of instruments suited to cover the requirements of all microscopic work, except metallurgy and petrology, from the simplest to the most exacting. The microscope is so designed that it can be purchased in its simplest form and built up by means of mechanical stages, condensers, dark ground illuminators, nosepieces, object glass changers, extra object glasses and eyepieces, into a most complete instrument for high power research work, without the necessity of returning the instrument for fitting.

No. 47 London Microscope.

The specification of the No. 47 London microscope is as follows :—

The base is of substantial proportions having a spread of 8 in. × $5\frac{3}{4}$ in. with the weight concentrated in the front toes to ensure stability in the inclined and horizontal positions.

The limb is a very rigid casting of robust construction. It will be seen from the illustrations that it is so shaped that a definite handle is formed for lifting the instrument without endangering the adjustable parts. The limb is hinged into the base so that the instrument can be inclined to any angle from the vertical to the horizontal, and stops are provided at these two positions.

Focussing adjustments. The greatest care has been taken in the design and in the processes of manufacture to ensure that both the coarse and fine adjustments work with perfect smoothness and complete freedom from shake and loss of time. The slides of the coarse and fine adjustments are designed on a new principle, which ensures perfect performance and durability. Both adjustments are actuated by milled heads on each side of the limb, thus the movements are readily accessible to either hand. One of the fine adjustment milled heads is provided with a scale reading the movement of the adjustment, each division being equal to ·005 m/m.

The body tube is of large diameter and is fitted with an extending drawtube graduated in millimetres, enabling tube lengths of 140 m/m. to 200 m/m. to be employed. In the model 47 I the body, which has a fixed tube length of 160 m/m. is fitted with a prismatic arrangement (see illustration page 22) so that the eyepiece is inclined at a convenient angle for observation when the instrument is in its vertical position.

The plain stage is of a large size measuring $4\frac{3}{8}$ in. square and gives a distance of $3\frac{1}{4}$ in. from the optical centre to the limb, so that a 6 in. petri dish or culture plate can be examined. Stage clips are provided. In all cases the stage is drilled ready to receive the detachable mechanical stage (No. 3305 or 3305A) so that this may be purchased separately and fitted without the necessity of returning the instrument.

The mirror. A double mirror, plane and concave is carried in a semi-circular fitting, which rotates, and in which the mirror turns on its axis.

Object glasses and eyepieces. All microscopes are fitted with our standard series, the performance of which has gained them a world-wide reputation. The quality of the optical portions of a microscope are perhaps of greater importance than any other feature. We have manufactured object glasses over a very extended period and having constantly improved them by research and computation, have no hesitation in stating that Beck object glasses form a standard throughout the world. The greatest care is taken in the manufacture of the other optical components which, although not so critical, have a great effect on the optical performance of the microscope. All object glasses, eyepieces and condensers are made to the standard (Royal Microscopical Society) threads and sizes. For particulars of object glasses and eyepieces, see pages 44 — 48.

Nosepieces. The nosepiece is made to the standard R.M.S. gauge and double, triple or quadruple dust-tight nosepieces can be attached. Objective changers can also be fitted.

The substages. The substages in this series are in various forms. No. 47A has a simple tubular substage for the reception of an iris diaphragm and Abbe condenser. No. 47B has a substage with focussing adjustment actuated by a spiral screw. The condenser can be swung out of the optical axis when not required. Nos. 47C, 47H, 47K and 47L have substages involving a new principle and having a great advantage over previous forms in the method of inserting and detaching the apparatus, i.e., the condenser and dark ground illuminator. The method of attachment is very simple and effective and obviates any danger of disturbance to the adjustments of the instrument during change. The substage apparatus is supported by the well-known six point kinematic arrangement. Three of these points are provided by small raised areas on the lower surface of the substage bracket, and the other three by the two centring screws and a spring loaded plunger. These latter operate at such an angle to the horizontal that when they impinge upon the conical surface on the substage apparatus, the pressure of the spring plunger and the re-action of the centring screws force the substage apparatus against the three areas on the lower face of the substage bracket. The spring plunger fits into a V groove, which prevents rotation of the apparatus (A in fig. 1). Each piece of apparatus is provided with a ring, which has the conical surface upon it (B in fig. 1). The inside of this ring is made to the standard size of 1.527 in. and spare rings can be provided for customer's own apparatus of this standard size. A clamping screw is provided to fix the ring on to the substage apparatus (C in fig. 1). A rack and pinion motion is provided for focussing. Accurate centration is accomplished by means of milled heads. In the No. 47P the substage is fitted with a dovetailed slide for the interchange of apparatus, and each piece of apparatus utilized is fitted on to a corresponding slide upon which it is individually centred. This method also is very convenient, especially when frequent changes are made from transmitted light to dark ground illumination, as the re-adjustment of the centring is obviated when the change is made.

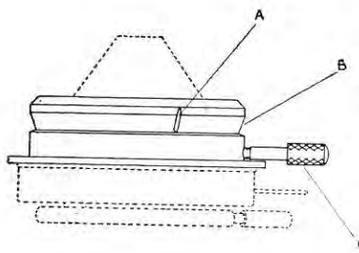

FIG. 1

Condensers and dark ground illuminators. For general work the Abbe condenser mounted with iris diaphragm and swing-out tray for colour screens is provided. The aplanatic condenser N.A. 1.4, achromatic condensers and dark ground illuminators, as described on pages 44, 51 and 52, are also available. Where achromatic condensers or dark ground illuminators are employed, it is necessary to select a microscope fitted with a centring substage, as accurate centration is essential, or in the case of model No. 47P, a centring adjustment on each dovetailed slide is necessary.

Mechanical stages. On models 47A, B, C and CI, a detachable mechanical stage, No. 3305, as illustrated on page 67, can be fitted. This gives a travel of 1 in. in the vertical direction and 3 in. in the horizontal. The mechanical stage, No. 3305A, giving a travel of 1·6 in. in the vertical direction but otherwise similar to No. 3305 can also be fitted to these models. These stages are readily attached and detached. The plain stage is drilled

to receive a fitting by which the mechanical stage is attached. A clamp screw firmly fixes it in position, drawing it up against the back edge of the plain stage, so that there is no tendency to shift once it is securely clamped. The movements of the stage are actuated by specially cut racks and pinions with fine teeth, giving a very delicate movement. The mechanical stage provided for No. 47L is the No. 3515, illustrated on page 16, which is built into the instrument. It has a vertical travel of 1 in. and a horizontal travel of 3 in. This stage is particularly suited to the examination of specimens, such as smears or serial sections, where practically the whole of the 3 in. × 1 in. slide is covered. The slide holders are both adjustable, so that slides of different sizes can be used. The left hand holder has an indicator by which it can be set to the correct position for the use of the scales. The scales read to .1 m/m. by means of verniers. The slide holders can be entirely removed to leave the stage clear for petri dishes, culture plates or large objects. The No. 47P has a built-in mechanical stage of the pattern in which the whole top plate travels. It has movements of 1 in. in the vertical and 1½ in. in the horizontal directions. The movements are operated by milled heads at the side, which are under flush with the top surface of the stage, so that large flat objects can be accommodated upon the stage. Verniers can be fitted to this stage if required and to position the 3 × 1 slide when these are employed, the Topley top stage is available, fitting on to the stage by means of screws which engage in the stage clip holes.

No. 47H is fitted with a circular revolving stage which is provided with a centring adjustment actuated by two screws with milled heads. It is supplied with or without graduations in degrees on its edge. This motion may be used either for the centration of the axis of rotation of the stage or for use as a delicate means of moving the object, forming a mechanical stage with a limited travel. No.47K has a similar revolving stage but is also provided with a mechanical stage giving travel of 3″ in the horizontal and 1″ in the vertical direction. The stage is illustrated on page 67. Scales and verniers are provided for reading the movements in both directions and the stage is supplied with graduations in degrees on its edge.

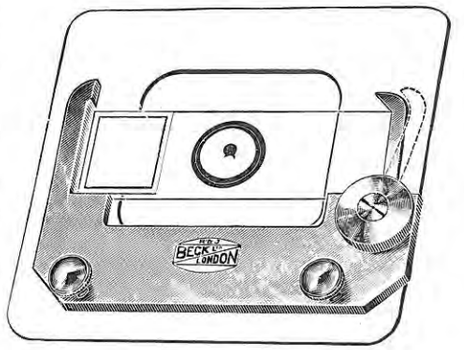

Topley top stage.

Angular eyepiece attachment. This can be fitted to all models of the No. 47 microscope (except No. 47I) and enables the instrument to be used in a vertical position but with the eyepiece at a convenient angle for observation. When fluids are used upon the stage and the microscope must be kept vertical, this will be found a great convenience. This attachment is described and illustrated on page 49.

Substage Illuminator.—The Beck substage illuminator giving self-contained light can be fitted to any model of the No. 47 microscope, and will be found described on page 53.

The case is of hard wood and provided with a convenient carrying handle and fitted with lock and key. Special cases are available for use in tropical climates.

The particulars given of the No. 47 microscope apply also except as regards the body tube, to the high power binocular No 48 (*pages 24 to 27*).

No. 47 London Microscope.

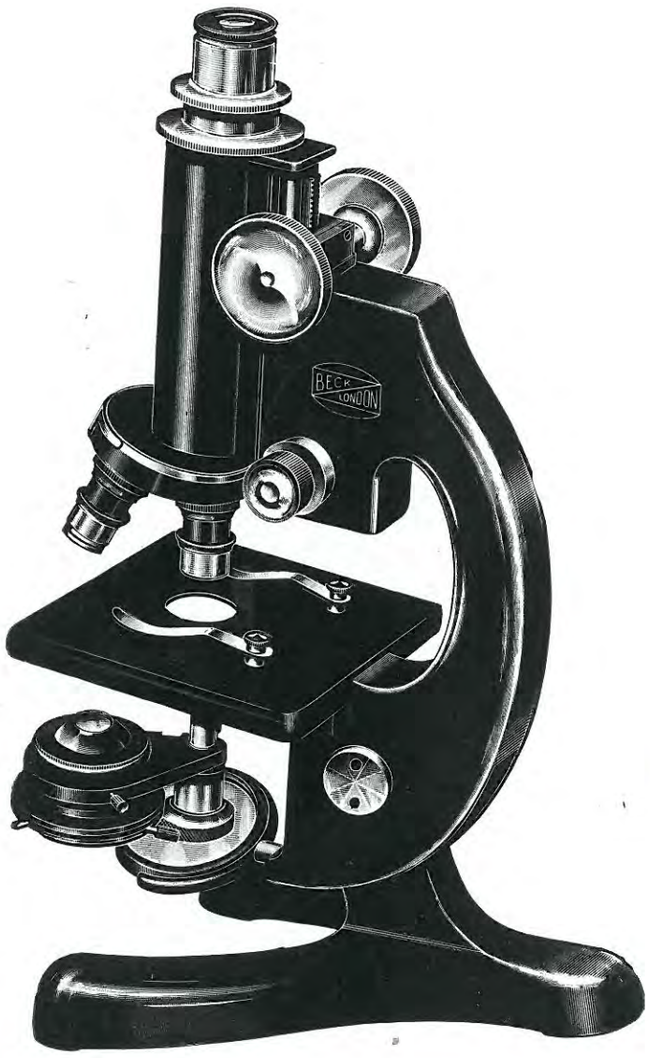

Stand No 47B.

No. 47 London Microscope.

No. 47A (1). **Stand,** with tubular substage and iris diaphragm, in case.

No. 3260. Eyepiece, 42 m/m. (×6) ... ...
No. 3231A. $\frac{2}{3}$ in. Object glass, 16 m/m., without box ... ...
No. 3234A. $\frac{1}{6}$ in. Object glass, 4 m/m., without box ... ...

No. 47A (2). **Outfit** as 47A (1) with the addition of :—

No. 3300. Double nosepiece ... ...

No. 47B (1). **Stand,** with spiral focussing and swing-out substage, in case.

Nos. 3260/1. 2 Eyepieces, 42 m/m. (×6) and 25 m/m. (×10) ...
No. 3231A. $\frac{2}{3}$ in. Object glass, 16 m/m., without box ... ...
No. 3234A. $\frac{1}{6}$ in. Object glass, 4 m/m., without box ... ...
No. 3286. Abbe condenser and iris diaphragm ... ...
No. 3301. Triple nosepiece ... ...

No. 47B (2). **Stand,** with spiral focussing and swing-out substage, in case.

Nos. 3260/1. 2 Eyepieces, 42 m/m. (×6) and 25 m/m. (×10) ...
No. 3231A. $\frac{2}{3}$ in. Object glass, 16 m/m., without box ... ...
No. 3234A. $\frac{1}{6}$ in. Object glass, 4 m/m., without box ... ...
No. 3251. $\frac{1}{12}$ in. Object glass, 2 m/m. oil immersion ... ...
No. 760. Cedar oil bottle, with dipper, ground on cap and supply of oil... ... ...
No. 3286. Abbe condenser and iris diaphragm ... ...
No. 3301. Triple nosepiece ... ...

No. 47B (3). **Outfit** as No. 47B (2) with the addition of :—

No. 3305. Detachable mechanical stage ... ...

No. 3818. Tropical case ... ... extra

No. 3779. Angular eyepiece attachment ... ...

Substage illuminator No. 2094 as described on page 53 can be fitted to the above microscopes.

Any apparatus can be added or omitted at a corresponding addition or reduction of price.

No 47 London Microscope.

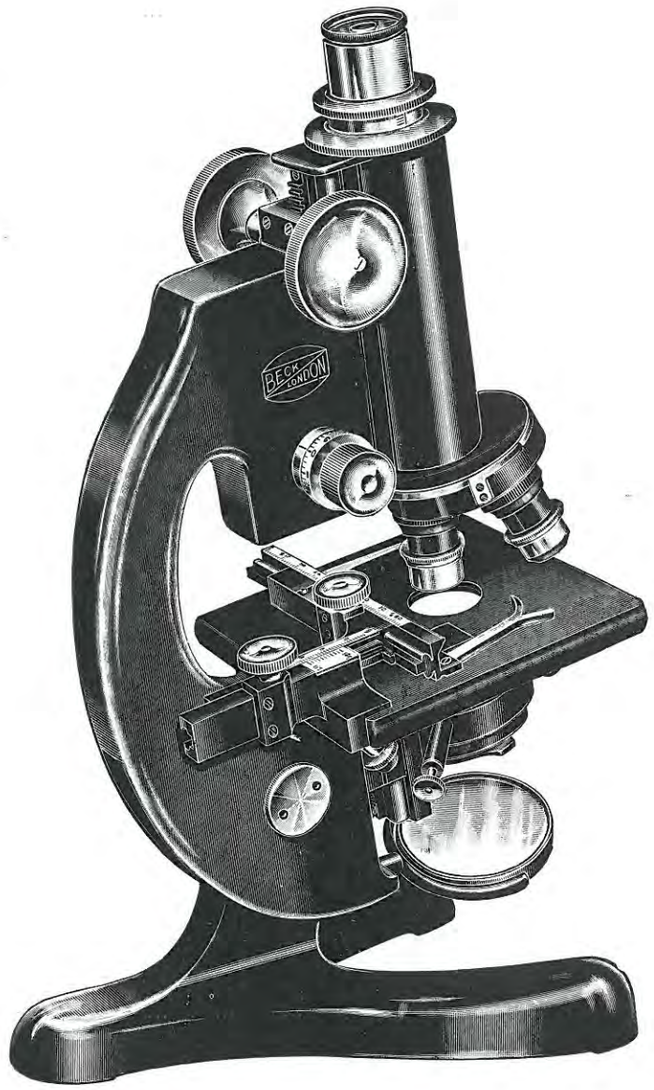

Stand No. 47C with No. 3305 mechanical stage.

No. 47 London Microscope.

No. 47C (1). Stand, with rack and pinion focussing and centring substage, in case

Nos. 3260/1.	2 Eyepieces, 42 m/m. (×6) and 25 m/m. (×10) ...	
No. 3231A.	$\frac{2}{3}$ in. Object glass, 16 m/m., without box	
No. 3234A.	$\frac{1}{6}$ in. Object glass, 4 m/m., without box	
No. 3286.	Abbe condenser and iris diaphragm	
No. 3300.	Double nosepiece	

No. 47C (2). Stand, with rack and pinion focussing and centring substage, in case

Nos. 3260/1.	2 Eyepieces, 42 m/m. (×6) and 25 m/m. (×10) ...	
No. 3231A.	$\frac{2}{3}$ in. Object glass, 16 m/m.	
No. 3234A.	$\frac{1}{6}$ in. Object glass, 4 m/m.	
No. 3251.	$\frac{1}{12}$ in. Object glass, 2 m/m., oil immersion	
No. 760.	Cedar oil bottle with dipper, ground on cap and supply of oil	
No. 3286.	Abbe condenser and iris diaphragm	
No. 3301	Triple nosepiece	

No. 47C (2A). Outfit as No. 47C (2) but with large aperture object glasses ...

No. 47C (3). Stand, with rack and pinion focussing and centring substage, in case

Nos. 3260/2.	3 Eyepieces, 42 m/m. (×6), 25 m/m. (×10) and 17 m/m. (×15)	
No. 3231.	$\frac{2}{3}$ in. Object glass, 16 m/m.	
No. 3234.	$\frac{1}{6}$ in. Object glass, 4 m/m.	
No. 3235.	$\frac{1}{12}$ in. Object glass, 2 m/m. oil immersion	
No. 3296.	High power dark ground illuminator, in substage fitting	
No. 3298.	Stop for $\frac{1}{12}$ in. object glass	
No. 3288.	Achromatic condenser and iris diaphragm	
No. 3305.	Detachable mechanical stage	
No. 3301.	Triple nosepiece	

No. 3818.	Tropical case	extra
No. 3779	Angular eyepiece attachment	

Substage illuminator No. 2094 as described on page 53 can be fitted to the above microscopes.

Any apparatus can be added or omitted at a corresponding addition or reduction of price.

No. 47 London Microscope.

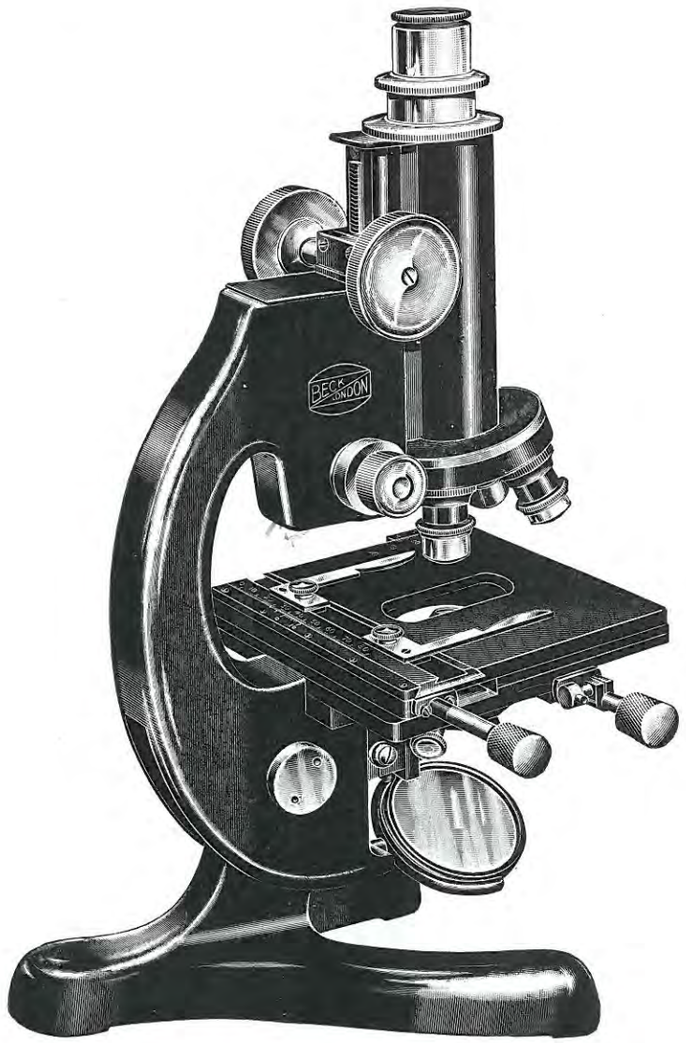

Stand No. 47L.

No. 47 London Microscope.

No. 47L (1). **Stand,** with built-in mechanical stage, rack and pinion focussing and centring substage, in case ... ...
Nos. 3260/1. 2 Eyepieces, 42 m/m. (×6) and 25 m/m. (×10) ...
No. 3231A. $\frac{2}{3}$ in. Object glass, 16 m/m., without box ... ...
No. 3234A. $\frac{1}{6}$ in. Object glass, 4 m/m., without box ... ...
No. 3286. Abbe condenser and iris diaphragm ... ...
No. 3300. Double nosepiece ... ...

No. 47L (2). **Stand,** with built-in mechanical stage, rack and pinion focussing and centring substage, in case ... ...
Nos. 3260/1. 2 Eyepieces, 42 m/m. (×6) and 25 m/m.(×10) ...
No. 3231A. $\frac{2}{3}$ in. Object glass, 16 m/m. ... ...
No. 3234A. $\frac{1}{6}$ in. Object glass, 4 m/m. ... ...
No. 3251. $\frac{1}{12}$ in. Object glass, 2 m/m., oil immersion ... ...
No. 760. Cedar oil bottle with dipper, ground on cap and supply of oil ... ...
No. 3286. Abbe condenser and iris diaphragm ... ...
No. 3301. Triple nosepiece ... ...

No. 47L (2A). **Outfit** as No. 47L (2) but with large aperture object glasses ...

No. 47L (3). **Stand,** with built-in mechanical stage, rack and pinion focussing and centring substage, in case ... ...
Nos. 3260/2. 3 Eyepieces, 42 m/m. (×6), 25 m/m. (×10) and 17 m/m. (×15) ... ...
No. 3231. $\frac{2}{3}$ in. Object glass, 16 m/m. ... ...
No. 3234. $\frac{1}{6}$ in. Object glass, 4 m/m. ... ...
No. 3235. $\frac{1}{12}$ in. Object glass, 2 m/m. oil immersion ...
No. 3296. High power dark ground illuminator, in substage fitting
No. 3298. Stop for $\frac{1}{12}$ in. object glass... ... ...
No. 3288. Achromatic condenser and iris diaphragm ... ...
No. 3301. Triple nosepiece ... ...

No. 47L (4). **Outfit** as No. 47L (3) but with apochromatic object glasses and compensating eyepieces (×6, ×11 and ×17) ... ...

No. 3818. Tropical case ... ... extra

Nos. 1820/22. Beck objective changer with 3 centring fittings, in case, in place of No. 3301 triple nosepiece extra

Substage illuminator No. 2094 as described on page 53 can be fitted to the above microscopes.

Any apparatus can be added or omitted as a corresponding addition or reduction of price.

No. 47 London Microscope.



Stand No. 47P.

No. 47 London Microscope.

No. 47P (1). **Stand,** with built-in mechanical stage, rack and pinion focussing substage, in case ... ...
Nos. 3260/1. 2 Eyepieces, 42 m/m. (×6) and 25 m/m. (×10) ...
No. 3231A. $\frac{2}{3}$ in. Object glass, 16 m/m. ... ...
No. 3234A. $\frac{1}{6}$ in. Object glass, 4 m/m. ... ...
No. 3286. Abbe condenser and iris diaphragm ... ...
No. 3300. Double nosepiece ... ...

No. 47P (2). **Stand,** with built-in mechanical stage, rack and pinion focussing substage, in case ... ...
Nos. 3260/1. 2 Eyepieces, 42 m/m. (×6) and 25 m/m. (×10) ...
No. 3231A. $\frac{2}{3}$ in. Object glass, 16 m/m. ... ...
No. 3234A. $\frac{1}{6}$ in. Object glass, 4 m/m. ... ...
No. 3251. $\frac{1}{12}$ in. Object glass 2 m/m., oil immersion ... ...
No. 760 Cedar oil bottle with dipper, ground on cap and supply of oil ... ...
No. 3286. Abbe condenser and iris diaphragm ... ...
No. 3301. Triple nosepiece ... ...

No. 47P (3). **Stand,** with built-in mechanical stage, rack and pinion focussing substage, in case ... ...
Nos. 3260/1. 2 Eyepieces, 42 m/m. (×6) and 25 m/m. (×10) ...
No. 3231. $\frac{2}{3}$ in. Object glass, 16 m/m. ... ...
No. 3234. $\frac{1}{6}$ in. Object glass, 4 m/m. ... ...
No. 3235. $\frac{1}{12}$ in. Object glass, 2 m/m., oil immersion ... ...
No. 3286. Abbe condenser and iris diaphragm ... ...
No. 3301. Triple nosepiece ... ...

No. 47P (4). **Outfit** as No. 47P (3), with addition of No. 3297 high power dark ground illuminator in centring fitting and with stop for $\frac{1}{12}$ in. object glass ... ...

No. 47P (5). **Outfit** as No. 47P (3), with addition of No. 3294 high power focussing dark ground illuminator in centring fitting and with stop for $\frac{1}{12}$ in. object glass ... ...

No. 47P (6). **Outfit** as No. 47P (5) but with apochromatic object glasses, compensating eyepieces (×6 and ×11) and No. 3291 Achromatic condenser in centring fitting, in place of Abbe condenser ...

No. 3818. Tropical case ... ... extra
No. 3750. Topley top stage ... ...
No. 3752. Verniers to stage ... ...
Nos. 1820/22. Beck objective changer with three centring fittings, in case, in place of No. 3301 triple nosepiece, ... extra
No. 3779. Angular eyepiece attachment ... ...

Substage illuminator No. 2094 as described on page 53 can be fitted to the above microscopes.

Any apparatus can be added or omitted at a corresponding addition or reduction of price.

No. 47 London Microscope.



Stand No. 47H with No. 3754 graduations and vernier to stage.

No. 47 London Microscope.

No. 47H (1). **Stand,** with revolving centring stage, rack and pinion focussing and centring substage, in case ... ...

Nos. 3260/1. 2 Eyepieces, 42 m/m. (×6) and 25 m/m. (×10) ...
No. 3231. $\frac{2}{3}$ in. Object glass, 16 m/m. ... ...
No. 3234. $\frac{1}{6}$ in. Object glass, 4 m/m. ... ...
No. 3235. $\frac{1}{12}$ in. Object glass, 2 m/m. oil immersion ... ...
No. 3286. Abbe condenser and iris diaphragm ... ...
Nos. 1820/22. Beck objective changer, with three centring fittings, in case ... ...

No. 47K (1). **Stand,** with revolving, centring and mechanical stage, with graduations and vernier, rack and pinion focussing and centring substage, in case ... ...

Nos. 3260/1. 2 Eyepieces, 42 m/m. (×6) and 25 m/m. (×10) ...
No. 3231. $\frac{2}{3}$ in. Object glass, 16 m/m. ... ...
No. 3234. $\frac{1}{6}$ in. Object glass, 4 m/m. ... ...
No. 3235. $\frac{1}{12}$ in. Object glass, 2 m/m. oil immersion ... ...
No. 3288. Achromatic condenser N.A.1 ... ...
Nos. 1820/22. Beck objective changer, with three centring fittings, in case ... ...

No. 47K (2). **Outfit** as No. 47K (1) but with the addition of No. 3293 high power focussing dark ground illuminator and stop for $\frac{1}{12}$th object glass

No. 47K (3). **Stand** with revolving centring and mechanical stage, with graduations and vernier, rack and pinion focussing and centring substage, in case ... ...

Nos. 3266 and 3268. 2 Compensating eyepieces, 45 m/m. (×6) and 22 m/m. (×11) ... ...
No. 3241. $\frac{2}{3}$ in. Apochromatic object glass, 16 m/m. ... ...
No. 3245. $\frac{1}{6}$ in. Apochromatic object glass, 4 m/m. ... ...
No. 3248. $\frac{1}{12}$ in. Apochromatic object glass, 2 m/m. oil immersion
No. 3645. Achromatic condenser, dry, N.A. .95 ... ...
Nos. 1820/22. Beck objective changer, with three centring fittings in case ... ...

No. 47K (4). **Outfit** as No. 47K (3) but with the addition of No. 3293 high-power focussing dark ground illuminator and stop for $\frac{1}{12}$th object glass ... ...

No. 3754. Graduations in degrees and vernier to stage of No. 47H (1) extra
No. 3818. Tropical case ... ... extra

Substage illuminator No. 2094 as described on page 53 can be fitted to the above microscopes.

Any apparatus can be added or omitted at a corresponding addition or reduction of price.

No. 47 London Microscope.



Stand No. 47CI with No. 3305 mechanical stage.

No. 47 London Microscope.

No. 47CI (2). **Stand,** with inclined body, rack and pinion focussing and centring substage, in case. ... ...

Nos. 3260/1.	2 Eyepieces, 42 m/m. (×6) and 25 m/m. (×10)	...
No. 3231A.	$\frac{2}{3}$ in. Object glass, 16 m/m.	...
No. 3234A.	$\frac{1}{6}$ in. Object glass, 4 m/m.	...
No. 3251.	$\frac{1}{12}$ in. Object glass, 2 m/m., oil immersion	...
No. 760.	Cedar oil bottle, with dipper, ground on cap and supply of oil	...
No. 3286.	Abbe condenser and iris diaphragm	...
No. 3301.	Triple nosepiece	...

No. 47CI (2A). As outfit No. 47CI (2) but with large aperture object glasses ...

No. 3305.	Detachable mechanical stage to above models	extra
No. 3305A.	ditto.	extra

No. 47LI (2). **Stand,** with inclined body, built-in mechanical stage, rack and pinion focussing and centring substage, in case ... ...

Nos. 3260/1.	2 Eyepieces, 42 m/m. (×6) and 25 m/m. (×10)	...
No. 3231A.	$\frac{2}{3}$ in. Object glass, 16 m/m.	...
No. 3234A.	$\frac{1}{6}$ in. Object glass, 4 m/m.	...
No. 3251.	$\frac{1}{12}$ in. Object glass, 2 m/m., oil immersion ...	...
No. 760.	Cedar oil bottle, with dipper, ground on cap and supply of oil	...
No. 3286.	Abbe condenser and iris diaphragm	...
No. 3301.	Triple nosepiece	...

No. 47LI (2A). **Outfit** as No. 47LI (2) but with large aperture object glasses ...

No. 47LI (3). **Stand,** with inclined body, built-in mechanical stage, rack and pinion focussing and centring substage, in case ... ...

Nos. 3260/2.	3 Eyepieces, 42 m/m. (×6), 25 m/m. (×10) and 17 m/m. (×15)	...
No. 3231.	$\frac{2}{3}$ in. Object glass, 16 m/m.	...
No. 3234.	$\frac{1}{6}$ in. Object glass, 4 m/m.	...
No. 3235.	$\frac{1}{12}$ in. Object glass, 2 m/m., oil immersion	...
No. 3296.	High power dark ground illuminator in substage fitting	
No. 3298.	Stop for $\frac{1}{12}$ in. object glass	...
No. 3288.	Achromatic condenser and iris diaphragm	...
No. 3301.	Triple nosepiece	...

No. 3818.	Tropical case	extra
Nos. 1820/22.	Beck objective changer with three centring fittings, in case, in place of No. 3301 triple nosepiece	extra

Substage illuminator No. 2094 as described on page 53 can be fitted to the above microscopes.

Any apparatus can be added or omitted at a corresponding addition or reduction fo price.

No. 48 Binocular and Monocular Microscope.



No. 48C. High Power Binocular Microscope with No. 3305 mechanical stage.

No. 48 Binocular and Monocular Microscope.

It is almost universally found among workers with the microscope that the binocular instrument, especially when observations are made over a prolonged period, affords complete freedom from eyestrain. The binocular form of microscope is, therefore, becoming more and more popular with microscopists for all general purposes. It is obvious that there must be, however, no loss of definition and resolution even with high powers and consequently the greatest care in manufacture and adjustment must be taken, so that the optical performance is in no way impaired by the more complicated optical system necessarily employed in a binocular instrument. The Beck binocular is designed and manufactured to fulfil these conditions, and to give the maximum of comfort in working. The tubes are inclined towards each other at the natural convergence angle of the eyes when working under indoor conditions. This method has been employed by all makers in the case of low power binocular microscopes and the advantage applies also to high power instruments with equal force, all eyestrain involved in the use of parallel tubes being avoided. When objects at a distance are viewed, the eyes are parallel, but indoors or even when inclining the head downwards, they involuntarily converge to a near object. For this reason, binocular microscopes constructed with parallel tubes are found by many to be fatiguing in use.

The Binocular microscope No. 48 presents an entirely new arrangement of the binocular and monocular bodies, which will be found of great convenience. In some classes of work, when specimens in fluid are examined, it is necessary that the stage be kept horizontal and hence the microscope must be vertical. To use the instrument in this manner causes discomfort unless the eyepiece tubes are inclined at a suitable angle. In the No. 48 microscope the bodies, both binocular and monocular, may be used either in the straight or inclined position. This is achieved by having a prismatic adapter in a separate unit which inclines the line of vision and which may or may not be employed. Hence either the binocular or monocular body may be attached direct, or the inclining unit may be interposed.

The binocular body has an accurate adjustment for setting the interocular distance from 55 to 70 m.m. and one tube has an adjustment to compensate for any difference in focus between the two eyes. The inclining units are fitted with a tube length corrector which compensates for the additional length of tube and brings the power back to normal. The monocular body has an extending drawtube, graduated, to vary the tube length.

The microscope stand is similar to the No. 47 as described on pages 8 to 11 except as regards the body tube, and the various stages and substages as fitted to this instrument can be supplied.

No. 48 Binocular and Monocular Microscope.

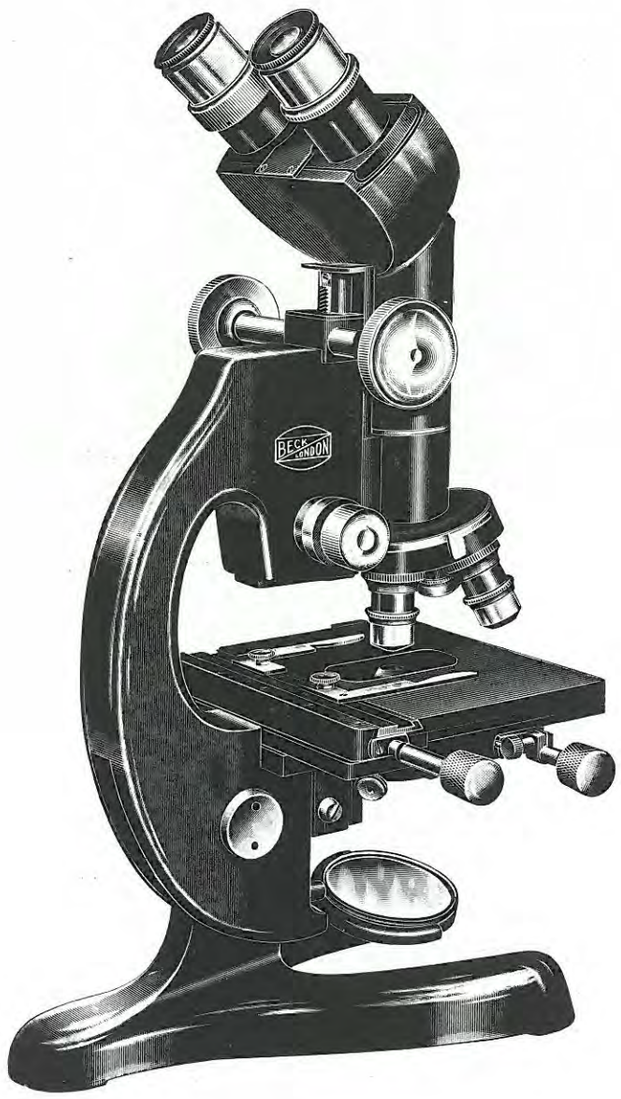

Stand No. 48LI.

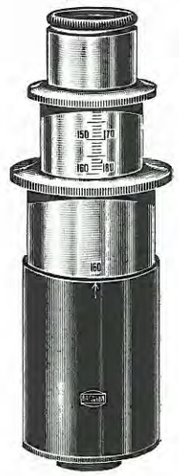

No. 1344

No. 48 Binocular and Monocular Microscope.

The design of the stand of the No. 48 microscope is similar to that of the No. 47, and the general specification given on pages 8 to 11 applies in all respects except in the case of the body and draw tube. In the models listed below, the stand of No. 48 C is similar to No. 47 C which is illustrated with the mechanical stage No. 3305 on page 14. No. 48L is similar to No. 47L illustrated on page 16 and No. 48P is similar to No. 47P illustrated on page 18. No. 48 H is similar to No. 47 H as illustrated on page 20. No. 48K has the addition of Stage No. 3306 illustrated on page 67.

No. 48C. High-power Binocular Microscope with plain stage and rack and pinion focussing and centring substage (as illustrated page 24).
Stand only, in case ... ...

No. 48L. High-power Binocular Microscope with built-in mechanical stage and rack and pinion focussing and centring substage.
Stand only, in case ... ...

No. 48P. High-power Binocular Microscope with built-in mechanical stage and rack and pinion focussing substage.
Stand only, in case ... ...

No. 48H. High-power Binocular Microscope with revolving centring stage and rack and pinion focussing and centring substage
Stand only, in case ... ...

No. 48K. High-power Binocular Microscope with revolving centring and mechanical stage and rack and pinion focussing and centring substage
Stand only, in case ... ...

No. 48CI. As No. 48C but with addition of inclined unit ... ...
No. 48LI. As No. 48L but with addition of inclined unit (as illustrated on page 26). ... ...
No. 48PI. As No. 48P but with addition of inclined unit ... ...
No. 48HI. As No. 48H but with addition of inclined unit ... ...
No. 48KI. As No. 48K but with addition of inclined unit ... ...
No. 1344. Monocular body, interchangeable with binocular, for any of the above instruments ...
No. 3305. Detachable mechanical stage to Models 48C and 48CI ... ...
No. 3305A. Detachable mechanical stage to Models 48C and 48CI ... ...
No. 3752. Verniers to mechanical stage on Models 48P and 48PI ... ...
No. 3754. Graduations in degrees and vernier to stage of Models 48H and 48HI ... ...
No. 3750. Topley top stage on Models 48P and 48PI ... ...

Substage illuminator as described on page 53 can be fitted to the above microscopes.

Optical outfits suitable for the above will be found on page 28.

OPTICAL OUTFITS FOR NO. 48 BINOCULAR AND MONOCULAR MICROSCOPES.

Set F. Nos. 3260/1. 2 pairs Eyepieces (×6) and (×10) ... ...
No. 3231. $\frac{2}{3}$ in. Object glass 16 m/m. ... ...
No. 3234. $\frac{1}{6}$ in. Object glass 4 m/m. ... ...
No. 3286. Abbe condenser and iris diaphragm ... ...
No. 3300. Double nosepiece ... ... _____

Set G. Set as above, but with
No. 3235. $\frac{1}{12}$ in. Oil immersion object glass (2 m/m.) and No. 3301 triple nosepiece in place of No. 3300 double nosepiece _____

Set H. Nos. 3260/2. 3 pairs Eyepieces (×6), (×10) and (×15) ... ...
No. 3231. $\frac{2}{3}$ in. Object glass, 16 m/m. ... ...
No. 3232. $\frac{1}{3}$ in. Object glass, 8 m/m. ... ...
No. 3234. $\frac{1}{6}$ in. Object glass, 4 m/m. ... ...
No. 3235. $\frac{1}{12}$ in. Object glass 2 m/m., oil immersion ... ...
No. 3298. Stop for $\frac{1}{12}$ in. object glass ... ...
No. 3288. Achromatic condenser and iris diaphragm ... ...
No. 3293. High power focussing dark ground illuminator ... ...
No. 3302. Quadruple nosepiece ... ... _____

Set J. As Set H but with No. 3645 achromatic condenser in place of No. 3288. _____

OPTICAL OUTFITS WITH APOCHROMATIC OBJECT GLASSES.

Set K. Nos. 3266 and 3268. 2 pairs Compensating eyepieces (×6) and (×11)...
No. 3241. $\frac{2}{3}$ in. Object glass, 16 m/m. ... ...
No. 3244. $\frac{1}{6}$ in. Object glass, 4 m/m. ... ...
No. 3248. $\frac{1}{12}$ in. Object glass 2 m/m., oil immersion N.A. 1.3 ...
No. 3288. Achromatic condenser and iris diaphragm ... ...
No. 3301. Triple nosepiece ... ... _____

Set L. Nos. 3266, 3268, 3270. 3 pairs Compensating eyepieces (×6), (×11) and (×25) ... ...
No. 3241. $\frac{2}{3}$ in. Object glass, 16 m/m. ... ...
No. 3242. $\frac{1}{3}$ in. Object glass, 8 m/m. ... ...
No. 3245. $\frac{1}{6}$ in. Object glass, 4 m/m. with correction collar ...
No. 3248. $\frac{1}{12}$ in. Object glass, 2 m/m., oil immersion N.A. 1.3 ...
No. 3291. Dry and immersion achromatic condenser N.A. 1.3 and iris diaphragm ... ...
No. 3293. High power focussing dark ground illuminator ... ...
No. 3302. Quadruple nosepiece ... ... _____

Nos. 1820/22. Beck objective changer, with three centring fittings, in case, in place of No. 3301 triple nosepiece ... ... extra

Nos. 1820/22. Beck objective changer, with four centring fittings, in case, in place of No. 3302 quadruple nosepiece ... ... extra

For models No. 48P and 48PI prices will be quoted for condensers, dark ground illuminators with the necessary centring adjustments, on application.

Any apparatus can be added or omitted at a corresponding addition or reduction of price.

Bench Metallurgical Microscope.

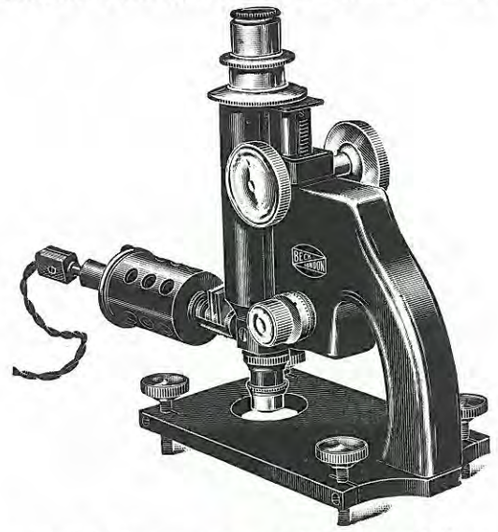

The design of this model renders the instrument very suitable for workshop use. For ordinary metallurgical purposes, the specimens are placed on the stage. For large surfaces or parts in situ the instrument can be placed in the required position and focussed directly through the hole in the stage. The vertical illuminator is of the prism type and is complete with lighting attachment. A reflector of the thin glass type can be supplied to work interchangeably with the prism, or if preferred, can be supplied in place of the prism. The lamp employed in the lighting attachment is rated at 12 volts, and can be operated from accumulators or from the mains supply with resistance or transformer. Full adjustments are provided to the reflector of the vertical illuminator facilitating accurate setting. The instrument has fine and coarse adjustments for focussing and the body has an adjustable drawtube. Levelling screws form the feet on which the instrument stands and enable it to be levelled, when it is desired to take photographs, or adjusted upon an irregular surface.

A case is not included in the price as listed, but can be supplied as an extra if required.

No. 3226A. Stand ... ...
Nos. 3260/1. 2 Eyepieces, 42 m/m. (×6) and 25 m/m. (×10) ...
No. 3230. $1\frac{1}{2}$ in. Object glass, 32 m/m. ... ...
No. 3231. $\frac{2}{3}$ in. Object glass, 16 m/m., short mounted ... ...
No. 3234. $\frac{1}{6}$ in. Object glass, 4 m/m., short mounted ... ...
Nos.1820/22. Beck objective changer with 3 fittings, in case ... ... _____

No. 3226C. Stand ... ...
Nos. 3260/1. 2 Eyepieces, 42 m/m., (×6) and 25 m/m. (×10) ...
No. 3230. $1\frac{1}{2}$ in. Object glass, 32 m/m. ... ...
No. 3231. $\frac{2}{3}$ in. Object glass, 16 m/m., short mounted ... ...
No. 3234. $\frac{1}{6}$ in. Object glass, 4 m/m., short mounted ... ...
No. 3235. $\frac{1}{12}$ in. Object glass, 2 m/m., oil immersion short mounted
Nos.1820/22. Beck objective changer with 4 fittings, in case ... ... _____

No. 4960A. Thin glass reflector ... ... extra
No. 3634. Resistance for running lighting attachment from 100-250 volts D. C.
No. 3633. Transformer for running lighting attachment from alternating current, 210, 230 and 250 volts ... ...
No. 3632. Case... ... ...

Laboratory Metallurgical Microscope.

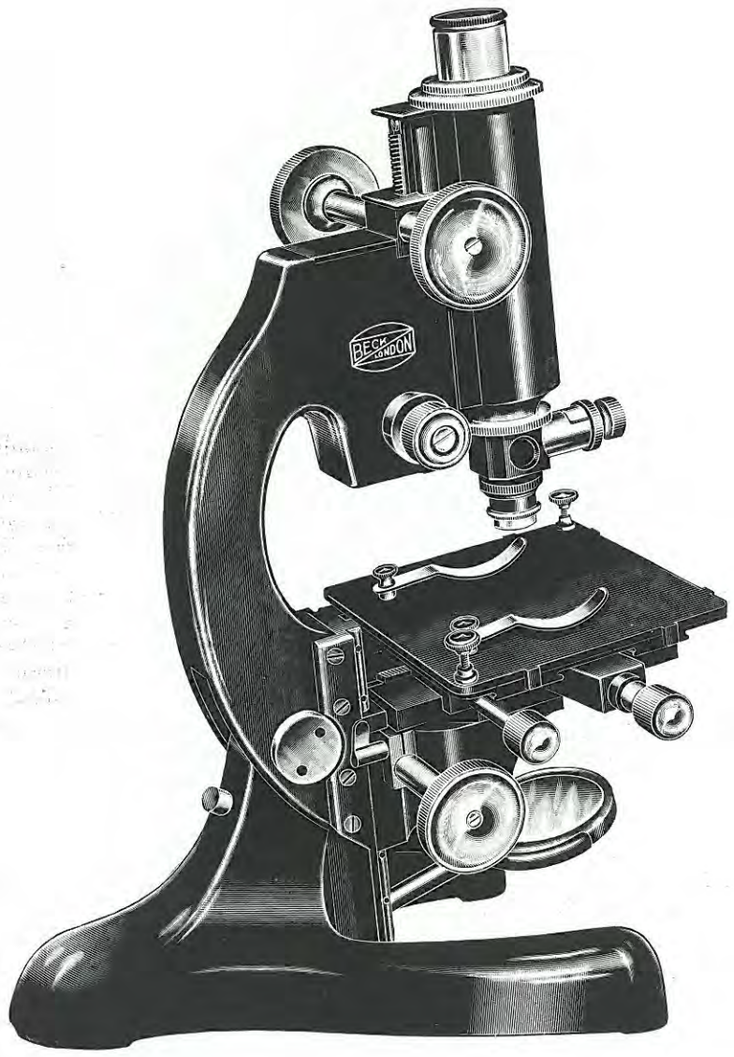

Stand No. 3228 with No. 3205 levelling top plate.

Laboratory Metallurgical Microscope.

This microscope is designed especially for metallurgical work either with prepared specimens mounted on slides or for examining large unmounted specimens. The instrument is of a very solid construction to secure the greatest rigidity and freedom from vibration in its parts, thus rendering it most satisfactory in use for either visual or photographic purposes. The base has a large spread, being 6 in. in width across the front toes and having a length from back to front of 8½ in. This, combined with its considerable weight and the fact that the hinged pillar is placed well forward, ensures its stability in all positions from the vertical to the horizontal. The limb also is of very solid construction and is shaped for the convenient lifting of the microscope. The stage is carried upon a wide dovetailed slide and travels in a vertical direction, the movement being actuated by a rack and pinion with milled head. The body is also fitted upon a slide with rack and pinion movement. The coarse focussing can be done by adjustment of either the stage or the body, and a very large variation of separation between these parts is available for the accommodation of specimens, the maximum obtainable being 6 in., the mirror, which is not required for opaque objects, being removed. The fine focussing adjustment which operates upon the body is smooth and easy in working and is free from backlash. It has milled heads on either side of the limb and one is graduated to .005 m.m.

The stage is very robust, and the top plate is provided with mechanical adjustments for the lateral movement of the specimen. The stage will accommodate prepared specimens on slides, held in position by spring clips, or, the clips being removed, large and thick objects may be placed upon it and moved in the field of view by means of the mechanical adjustments of the stage. These are operated by milled heads projecting from the side. A levelling plate may be fitted upon the top surface of the stage, as illustrated on page 30.

Although this microscope is essentially designed for the examination of opaque specimens, facilities are provided for its use with transparent objects. The substage mirror and rack and pinion focussing substage are available and render the instrument capable of the critical examination of transparent specimens.

Two forms of body are fitted. No. 3228 has a monocular body with adjustable drawtube graduated in millimetres. No. 3228B has a binocular body as fitted to the No. 48 high power binocular microscope described on pages 24 to 26. The use of the binocular body is found to give great relief from eyestrain and to be most satisfactory.

The microscopes are finished in stoved black enamel and all plated parts are in chromium. The case is of hardwood, with carrying handle and lock and key.

All optical parts are of our standard quality and object glasses are corrected for use with uncovered objects. If desired these can be "bloomed" to minimise internal reflections and avoid any glare which may detract from the crispness of the image.

The No. 4960 vertical illuminator (see page 59) or the Wrighton-Beck illuminator, with self-contained illumination (see page 57) can be fitted to both instruments. For photo micrographic work the No. 2259 camera illustrated and described on pages 61 and 62 is recommended.

Laboratory Metallurgical Microscope.

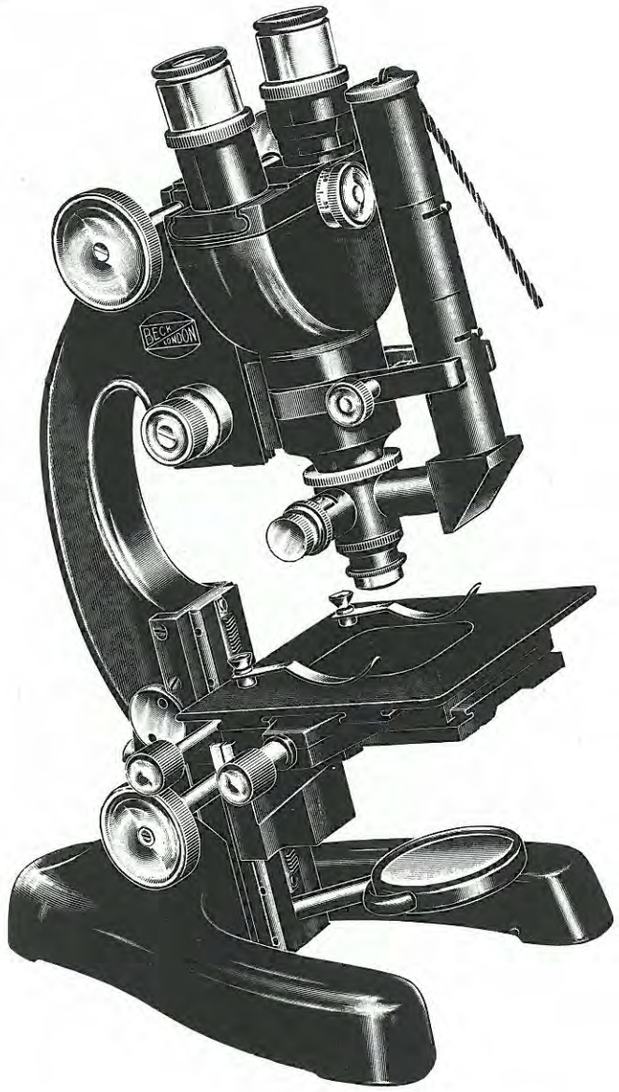

Stand No. 3228B with No. 1193 Wrighton-Beck Illuminator

Laboratory Metallurgical Microscope.

No. 3228A. **Stand,** in case ... ...
No. 4960. Vertical illuminator ... ...
Nos.3260/1. 2 Eyepieces, 42 m/m. (×6) and 25 m/m. (×10) ...
No. 3231. $\frac{2}{3}$ in. Object glass 16 m/m. short mounted ... ...
No. 3234. $\frac{1}{6}$ in. Object glass 4 m/m. short mounted ... ...
Nos.1820/2. Beck objective changer and 2 fittings in case ... ... _____

No. 3228BA. **Stand,** in case, with binocular body and equipment as No. 3228A with additional two eyepieces, paired ... ... _____

No. 3228C. **Stand,** in case ... ...
No. 4960. Vertical illuminator ... ...
Nos.3260/1. 2 Eyepieces, 42 m/m. (×6) and 25 m/m. (×10) ...
No. 3230. $1\frac{1}{2}$ in. Object glass 32 m/m. ... ...
No. 3231. $\frac{2}{3}$ in. Object glass, 16 m/m. short mounted ... ...
No. 3234. $\frac{1}{6}$ in. Object glass, 4 m/m. short mounted ... ...
No. 3235. $\frac{1}{12}$ in. Object glass, 2 m/m. oil immersion, short mounted ... ...
Nos.1820/2. Beck objective changer and 4 fittings, in case ... ... _____

No. 3228BC. **Stand,** in case, with binocular body and equipment as No. 3228C with additional two eyepieces, paired ... ... _____

No. 3228D. **Stand,** in case ... ...
No. 4960. Vertical illuminator ... ...
Nos. 3266, 3268, 3269. 3 Compensating eyepieces (×6), (×11) and (×17) ... ...
No. 3241M. $\frac{2}{3}$ in. Apochromatic object glass, 16 m/m. short mounted ... ...
No. 3244M. $\frac{1}{6}$ in. Apochromatic object glass, 4 m/m. short mounted ... ...
No. 3248M. $\frac{1}{12}$ in. Apochromatic object glass, 2 m/m, oil immersion, short mounted ... ...
Nos.1820/2. Beck objective changer and 3 fittings, in case ... _____

No. 3228BD **Stand,** in case, with binocular body and equipment as No. 3228D, with additional three eyepieces, paired ... ... _____

No. 3752. Verniers to stage ... ... extra

No. 3205. Levelling top plate to stage ... ... extra

No. 2278. Rack and pinion focussing substage ... ... extra

No. 1193. Wrighton-Beck illuminator with transformer and clamp for body in place of No. 4960 (see page 57) ... ... extra

Beck Reflecting Microscope

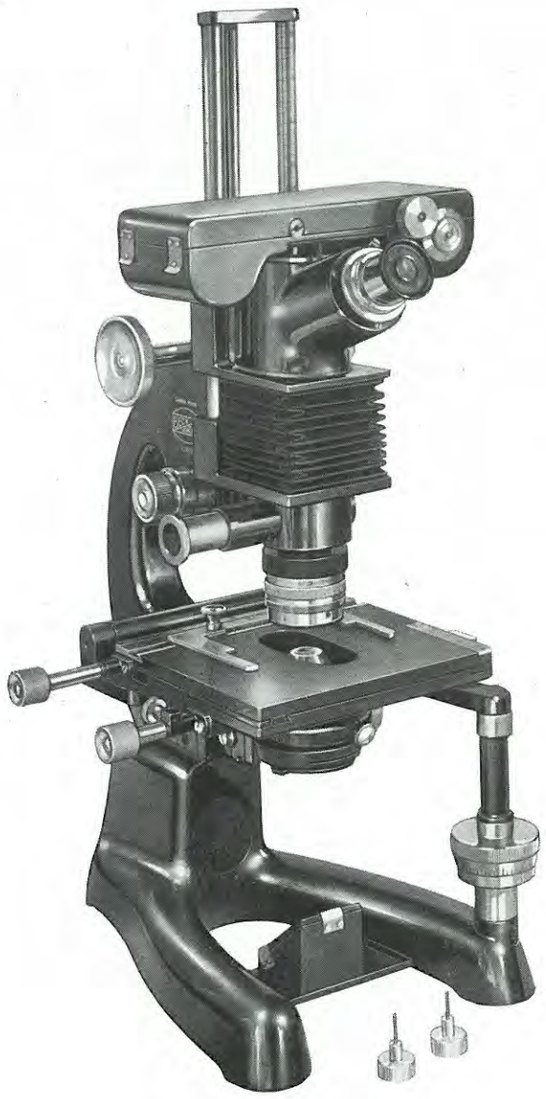

Stand No. 4196/9

Beck Reflecting Microscope.

The reflecting microscope stand, developed from the designs of the Wheatstone Laboratory and the Medical Research Council Bio-physics Research Unit of King's College, London, has been designed to exploit the full possibilities of the reflecting objectives described on page 46.

The stand is designed on very rigid lines to ensure the greatest stability and freedom from vibration. The general construction may be seen from the illustration. Special features have been introduced to fulfil the requirements for its purpose. An additional very fine focussing adjustment is fitted which moves only the stage upon which the object is placed. This eliminates the de-focussing of the substage as various levels of a thick specimen are examined. While this is not serious in refracting microscopy, with reflecting objectives a form of illumination is created giving spurious effects.

The substage is constructed to take ordinary condensers for use with visual light or to take a second objective used as a condenser, when other sources of light are used.

The objective is carried on a fitting fixed to the quick motion slide. As an additional feature a 45 deg. reflector can be fitted immediately above the objective so that the image may be projected in a horizontal direction and formed upon the slit of an analytical spectrograph. The observing eyepiece is of the inclined type. This has a removable reflector, so that after observation and focussing it can be removed from the axis and the light allowed to pass on to the film in the camera for photographic recording.

The camera uses 35 m/m. perforated film and takes up to 40, 1 in. diameter pictures. A bulb shutter is provided, so that the camera, with shutter closed, is a light tight unit which can be carried to and from a dark room. To justify the resolution of the reflecting objectives, Kodak microfile film or its equivalent is recommended.

The observing tube carries a special ×10 Ramsden eyepiece with graticule, having its focal plane set parfocal with the film plane of the camera. Any other eyepieces of standard size can also be used.

The position of focal planes of the camera and the observing eyepiece can be adjusted in relation to the objective from a minimum of 140 m/m., to a maximum of 275 m/m. A calibrated scale is provided to read this extension.

The mirrors are surface aluminised to enable radiations from the infra-red to short ultra violet regions of the spectrum to be employed.

No. 4195. Reflecting microscope with plain stage, substage, but without camera, eyepiece or spectroscope reflector ... ...

No. 4196. As No. 4195 but with built-in mechanical stage, as shown on illustration ... ...

No. 4197. Camera for attachment to Nos. 4195 and 4196 ... ... extra

No. 4198. Spectroscope reflector and fitting ... ... extra

No. 4199. Ramsden eyepiece ×10 with graticule ... ... extra

No. 4200. Case ... ... extra

Beck No. 50 Universal Microscope.

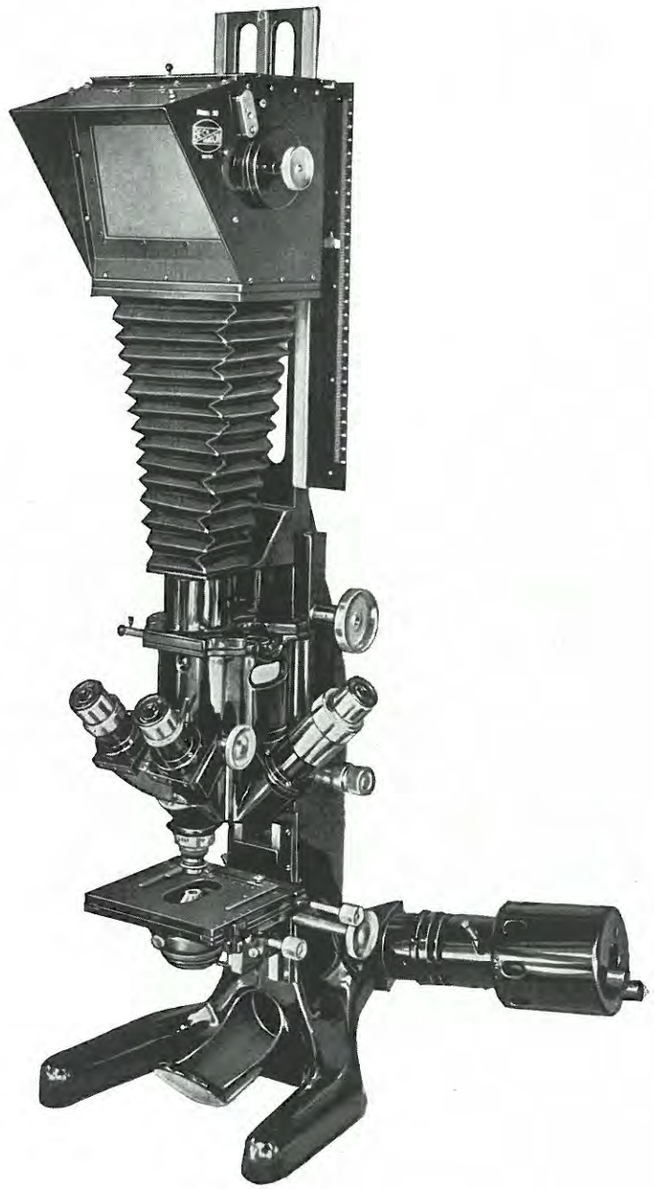

No. 50

Beck No. 50 Universal Microscope

A special booklet is published giving full particulars and price list of this microscope, a copy of which will be sent on application.

The No. 50 Universal Microscope has been designed to provide an instrument for visual, projection and photographic examinations by all methods usually employed by microscopists.

The whole apparatus is, as far as possible, constructed as a complete unit with a minimum of attachable parts. Thus, the change from monocular to binocular vision is made by rotating the two bodies in their turret and the change from visual observation to projection or photography by a simple movement. By this method of construction the rigidity of the whole instrument and its freedom from vibration are ensured. The accuracy and precision of the adjustments are of the highest order and the ease and convenience of manipulation will be appreciated, especially when work is done over a protracted period.

The instrument is supplied in three forms :-

No. 50 is for use with transparent objects. The illuminant is a closely wound coiled filament fitted into a lamp house at the rear. This instrument is shown in the illustration on page 36. Examinations can be made by light and dark field and polarised light. Phase contrast illumination can also be employed.

No. 50M. is for the examination of opaque specimens and is provided with a supplementary illuminating bench. The light source is either a closely coiled filament or a mercury vapour lamp. The various illuminators for work with light and dark field and by polarised light are provided. The phase contrast method can also be used.

No. 50N. is the complete apparatus for both transparent and opaque work by the methods and with the apparatus referred to above. It provides a universal instrument for research work.

In the construction of this apparatus full advantage has been taken of all latest improvements in processes of manufacture. Precision in both mechanical and optical work has advanced to a very high standard and the No. 50 Universal microscope has been designed in every detail to conform to these enhanced standards and to enable the microscopist to utilise the latest methods with convenience and ease.

Although of recent production, the advantages of this instrument have been appreciated by a number of well-known research institutions and industrial undertakings where outfits have been installed.

Beck Bullet Comparison Microscope.



No. 2122 with Camera 3654

Beck Bullet Comparison Microscope.

The general design of this apparatus may be seen from the illustration. It consists of two microscopes each with its own illuminant connected by means of a comparison eyepiece. Its purpose is to give, side by side in the field of the eyepiece, images of the objects seen through the two microscopes.

The microscopes are provided with coarse and fine focussing adjustments. The stages are provided with bullet holders and have adjustments in the vertical direction enabling the bullets to be focussed without disturbing the optical set-up. They are provided with mechanical movements in both directions for correctly positioning the object. Each stage carries a holder with a rotating adjustment operated by a fine screw thread and milled head for the slow rotation of the bullet, for systematic examination. Depths may be measured by focussing the different levels by means of the fine adjustment.

The comparison eyepiece which is described on page 49 combines the images in the two microscopes so that they are seen separated only by a fine dividing line.

A high power lamp is provided for the illumination of each object. Each has a built-in transformer with a dimming switch, so that the illumination can be matched, and has full adjustments for altering the angle of incidence of light.

A camera, which is ¼ plate size, fits over the comparison eyepiece. A shutter operated by an antinous release, giving time and instantaneous speeds, is provided.

A series of objectives and eyepieces are included, which are exactly matched for focus, thus ensuring that magnifications given with each microscope are identical. A range of magnifying powers of 12, 24 and 44 are obtained, and further lenses to give higher magnifications can be supplied if required.

No. 2122. Beck bullet comparison microscope, complete as described with paired ×5 and ×8 eyepieces, with matched 60 m/m., 50 m/m. and 32 m/m. objectives, bullet holders, comparison eyepiece, two illuminating lamps with transformers and dimming switches, all mounted on baseboard and including cabinets for the microscopes ... ...

No. 3654. Eyepiece camera, ¼ plate, with focussing screen and two metal plateholders ...

No. 3517. Spare bulbs ... ... each

No. 3655 Spare metal plateholders ... ... each

Bench Microscope.

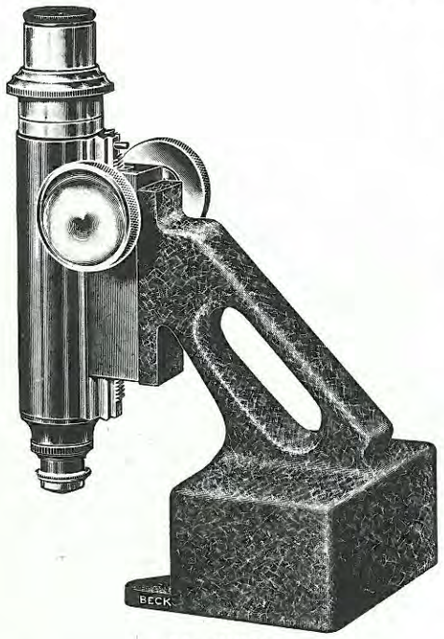

No. 3195A.

This microscope is of general utility for laboratory and industrial purposes where low and medium powers are required. It is suitable for the examination of any unmounted object and, being constructed with the microscope overhanging the base, the size of the object is not limited to small specimens.

This construction also has the advantage that delicate surfaces may be examined without having to place the instrument upon the surface itself. When fitted with a micrometer and calibrated, it forms an excellent microscope for measurement. The focussing is by a smooth working rack and pinion adjustment. A draw tube is provided which enables the instrument to be set to give a definite magnification when needed for measuring. The instrument is of solid construction, and is stable and rigid in use.

No. 3195A. Bench microscope ... ...
- No. 3260. Eyepiece, 42 m/m. (×6) ... ...
- No. 3230A. 1½ in. Object glass, 32 m/m., without box ... ...
- No. 3231A. ⅔ in. Object glass, 16 m/m., without box ... ...

No. 3195M. Bench microscope for measuring, giving magnifying power of 100, each division in eyepiece representing 1/50 m/m. ... ...

No. 3224. Oak case, with handle and lock and key ... ...

Process Microscope.

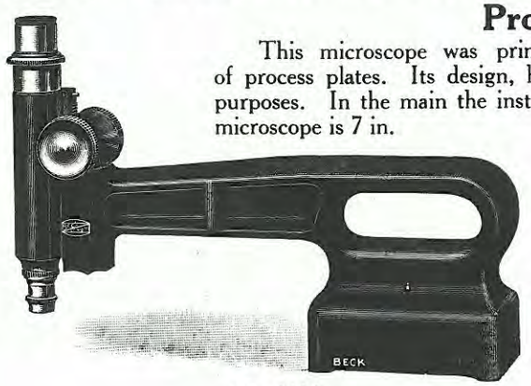

No. 3186.

This microscope was primarily designed for the examination of the etching of process plates. Its design, however, has been found very suitable for many other purposes. In the main the instrument is similar to No. 3195A, but the overhang of the microscope is 7 in.

No. 3186. Process microscope, with eyepiece 42m/m (×6) and ⅔ in. (16 m/m.) object glass

No. 3186A. As No. 3186 but with cross wires to eyepiece ...

No. 3186B. As No. 3186 but with micrometer scale to eyepiece ... ...

A model of this microscope is also made, with cobweb micrometer eyepiece for measuring displacements in celluloid models for stress testing. This is described in Prof. A. J. S. Pippard's book "The Experimental Study of Structures" (Arnold).

No. 2294. Stress measurement microscope ... ...

Micrometer Microscope.

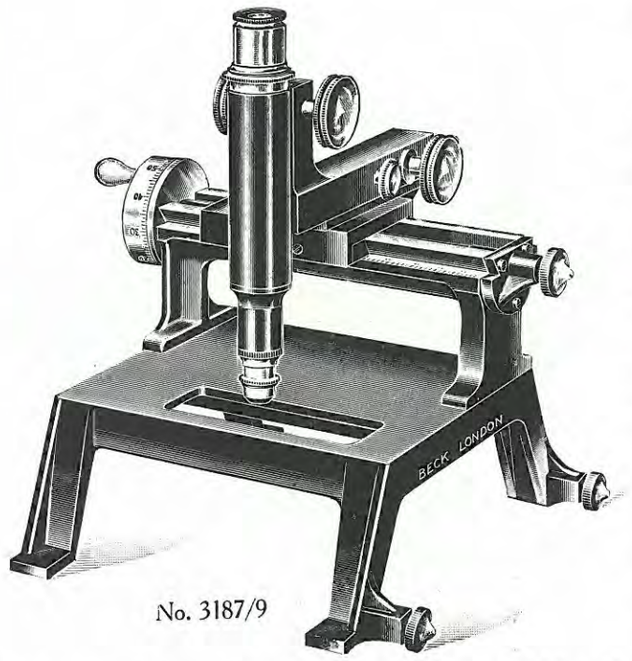

No. 3187/9

For making accurate measurements of objects of considerable size, a travelling microscope moved by a micrometer screw, provides the most satisfactory method. The crossline of the eyepiece is set alternatively on the two extremities of the object being measured and the amount of travel, giving the size, is read by means of the scale and divided drum. Two forms are made, No. 3187 reading to .01 mm. and No. 3189 reading to .001 inches. A travelling motion by rack and pinion, at right angles to the main travel is provided. This movement can be fitted with scale and vernier and a reading magnifier. Either opaque or transparent objects up to a length of 4 in. can be measured. A screw of finer pitch can be provided if specially ordered. The instrument can also be used as a reading microscope, the feet on which it stands when used for this purpose being provided with levelling adjustment. For reading distant scales a telescope object glass is supplied.

No. 3187. Stand, with eyepiece with crosswire and ⅔ in. (16 m/m.) object glass ... ...
No. 3187A. As No. 3187 but with addition of verniers and reading magnifier ... ...
No. 3189. Stand, with eyepiece with crosswire and ⅔ in. (16 m/m.) object glass ... ...
No. 3189A. As No. 3189 but with addition of verniers and reading magnifier ... ...
No. 3188. Telescope object glass, in mount to fit object glass thread ... ...

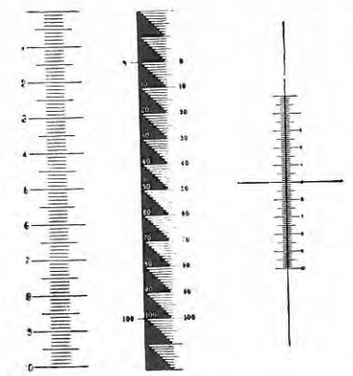

No. 3810. No. 3812. No. 3811.

Micrometers.

No. 3277. Stage micrometer on 3×1 slide, engraved 1/10 and 1/100 m/m. ... ...
No. 3278. Stage micrometer on 3×1 slide, engraved 1/100 and 1/1000 inch ... ...
No. 3807. Stage micrometer, ruled on metal ·1 and ·01 m/m ... ...
No. 3276. Eyepiece micrometer, scale 5 m/m., divided into 50 parts ... ...
No. 3810. Eyepiece micrometer, scale 10 m/m., divided into 100 parts ... ...
No. 3811. Eyepiece micrometer, scale 10 m/m., divided into 100 parts and cross lines ...
No. 3812. Step eyepiece micrometer ... ...
No. 3265. Eyepiece plate, ruled with cross lines ...
No. 3279. Eyepiece plate ruled in squares, ¼ m/m., ½ m/m., or 1 m/m. ... ...
No. 3808. Eyepiece plate, Patterson globe and circle

Cornex Dissecting Microscope.

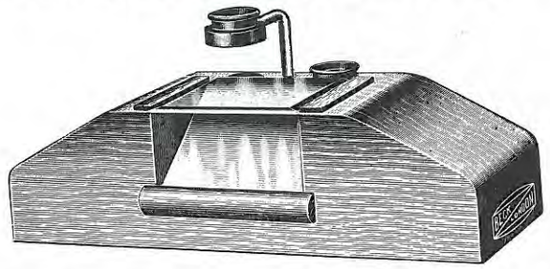

For class use this dissecting microscope will be found most satisfactory, as although it is of the simplest construction, it is very rigid and strong, and the magnification given is all that is required for ordinary botanical and entomological dissection. For naturalists' work and for such purposes as the recognition of diseases in bees and other insects it will be found equally useful.

The Cornex dissecting microscope is constructed from a solid block of wood and in use will be found very convenient. The sides of the block are cut away at an angle to form rests for the hands. A glass stage is provided upon which to place the objects, illuminated by a mirror set at an angle of 45°.

The lenses are carried in a fitting provided with a focussing motion and the lens is movable over the stage plate so that objects at different positions can be examined.

With the lenses supplied, magnifications of 7 and 14 are obtained. The two lenses are so arranged that they can be used either separately or combined, the higher power being obtained with the two lenses together, the lower power when used separately.

No. 33B. **Cornex dissecting microscope** complete with two magnifiers ... ...

Dissecting Arm.

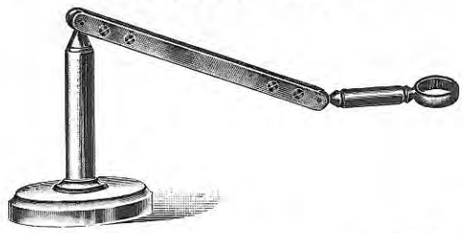

No. 3018. **Jointed dissecting arm,** with universal adjustments and fitting for magnifiers Nos. 3170D-3173D, 3183D ... ...

Magnifiers.

The following magnifiers are supplied for use with the Crescent dissecting microscope and No. 3018 dissecting arm. The achromatic series are extremely well corrected combinations giving maximum definition and are strongly recommended.

No. 3171D.	**Achromatic magnifier**	× 5	
No. 3183D.	„ „	× 8	
No. 3172D.	„ „	×12	
No. 3173D.	„ „	×20	
No. 3170D.	**Single lens magnifier**	× 5	

Crescent Dissecting Microscope.

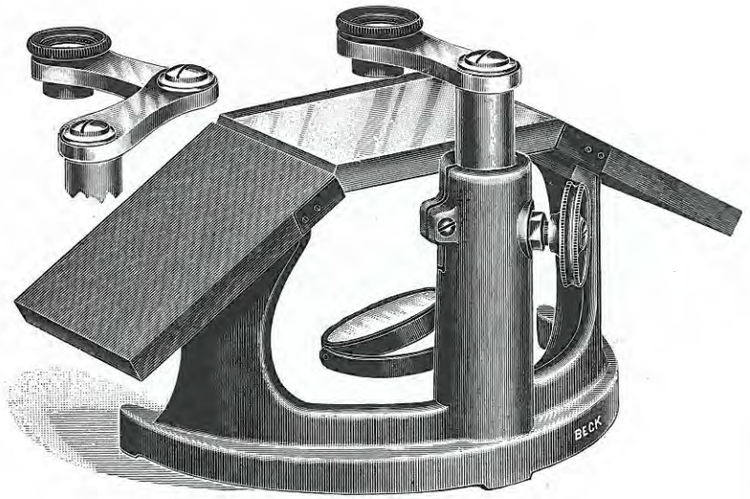

No. 3020.

The design and construction of this instrument have been specially considered with a view to perfect stability. Many dissecting microscopes are made on the lines of an ordinary microscope stand, that is with a small base, pillar and stage, with the addition of hand rests. Such a construction is unsuitable for dissecting as the weight placed upon the hand rests has a tendency to upset the instrument. In the Crescent dissecting microscope the base is a heavy casting on three projecting feet and with two uprights to support the hand rests and stage. The supports are directly under the hand rests, so that weight and pressure upon them have no tendency to tip the instrument. The lenses are carried on a swinging arm focussed by a rack and pinion actuated by a milled head, which is placed at a convenient angle for the hand. The amount of focussing motion is over 3 in. so that material of considerable thickness can be accommodated. The hand rests are of hard wood and the stage is a thick plate of glass. A mirror is provided below the stage, silvered on one side and opal glass on the other.

The instrument is supplied with a single swinging arm for holding the lenses or with a double arm which gives greater latitude to the movement of the lens over the stage plate.

A case can be supplied if desired.

No. 3020.	**Stand only**	
No. 3020A.	**Stand,** with single lens ×5	
No. 3020B.	**Stand,** with single lens ×5, and achromatic lenses ×12 and ×20	
No. 3020C.	**Stand,** with 3 achromatic lenses, × 5, × 12 and × 20	
No. 3021.	Double jointed arm fitted to any of the above	extra
No. 3022.	Case for above	

Object Glasses and Condensers

Great strides have been made in recent years in the production of microscope object glasses and condensers of the highest quality. By the invention of new formulae and by new methods of manufacture, adjustment and testing, we may claim that, in performance they attain a standard of the very highest order.

The usual type of object glass is made in three series, achromatic, apochromatic and fluorite or semi-apochromatic. The achromatic lenses fill the requirements for most purposes and are in general use on account of the fact that they are made to simpler formulae and of less expensive material and consequently are able to be sold at a lower price. The resolution is of a high order and is, in all lenses, as near to the theoretical resolving power as is attainable. The chief feature of the apochromatic series is that the corrections for the chromatic and zonal aberrations are more perfect. In achromatic object glasses, correction is made for two colours of the spectrum, but in apochromatic lenses the correction is made for three colours. For very fine structure undoubtedly apochromatic lenses give superior results; the perfection of the colour correction enables certain objects to be seen with greater crispness than is possible with achromatic lenses, and higher power eyepieces can be used without breaking down the image. For photography, apochromatics have a decided advantage. In order to obtain these superior corrections a more complicated formula is necessary, involving the use of a greater number of components than in the case of achromatic lenses and the substitution of fluorite for glass in some cases. This increases the cost and accounts for the higher price. In the semi-apochromatic type, in which only one power is made, the corrections very nearly approach the apochromatic series but the use of fluorite is restricted and consequently the price is more moderate. The lens of this series (3.75 m/m.) will be found to be most satisfactory for many types of work and is largely used as a substitute for the 2 m/m. when the higher power is not necessary but where its larger field of view is an advantage.

All object glasses, unless otherwise ordered, are corrected for a tube length of 160 m/m. Dry object glasses are adjusted for use with a cover glass, .007 in. in thickness, or for uncovered objects.

Four types of substage condenser are available. The Abbe condenser being only partially corrected is not sensitive to centration and is satisfactory where the most critical illumination is unnecessary. The aplanatic type is also not fully corrected but has a larger numerical aperture.

The use of an achromatic condenser is essential where the highest resolution is desired and for use with high aperture lenses, particularly with the apochromatic series. The NA 1 and NA 1.3 are fully corrected combinations, the latter being used in oil immersion. The NA .95 dry condenser is made with large lenses and has a focus of .56 inches. In all these condensers the top lens is removable, making them satisfactory for use with low powers. The corrections are of a very high order and consequently their centration is of great importance. A microscope with centring adjustments to the substage should therefore be selected.

All condensers are provided with iris diaphragms and swing out trays for the accommodation of colour filters and patch stops. With the latter, good dark-ground illumination can be obtained with low and moderate powers.

Achromatic Object Glasses.

No.	English designation. inches.	Focal length. m/m.	Numerical aperture.	Approximate magnifying power. With eyepiece. × 6. 42 m/m.	× 10. 25 m/m.	× 15. 17 m/m.	£ s. d.
3010b	2½	60	·07	8	15	20	
3011b	2	50	·08	10	20	29	
3230a	1⅕	32	·12	25	45	65	
3230	1½	32	·15	25	45	65	
3238	1	25	·15	40	65	95	
3038	1	25	·20	40	65	95	
3231a	⅔	16	·17	65	115	165	
3231	⅔	16	·28	65	115	165	
3231M	⅔	16	·28	65	115	165	
3232	⅓	8	·54	110	200	285	
3239	¼	6	·85	180	300	450	
3234a	⅙	4	·65	220	385	570	
3234	⅙	4	·85	275	475	700	
3234M	⅙	4	·85	275	475	700	
***3251**	1/12	2	1·0	575	1000	1400	
***3235**	1/12	2	1·3	575	1000	1400	
***3235M**	1/12	2	1·3	575	1000	1400	

Apochromatic Object Glasses.

No.	English designation. inches.	Focal length. m/m.	Numerical aperture.	Approximate magnifying power. With eyepiece. × 6. 45 m/m.	× 8. 30 m/m.	× 11. 22 m/m.	× 17. 15 m/m.	× 25. 10 m/m.	£ s. d.
3240	1⅕	40	·11	17	27	32	55	85	
3241	⅔	16	·35	55	80	100	160	255	
3241M	⅔	16	·35	55	80	100	160	255	
3242	⅓	8	·65	115	170	205	345	545	
3242M	⅓	8	·65	115	170	205	345	545	
3244	⅙	4	·95	215	318	390	650	1020	
3244M	⅙	4	·95	215	318	390	650	1020	
‡3245	⅙	4	·95	215	318	390	650	1020	
***†3247**	⅛	3	1·2	300	440	525	900	1400	
***3248**	1/12	2	1·3	490	720	875	1450	2250	
***3248M**	1/12	2	1·3	490	720	875	1450	2250	

Fluorite Object Glass.

***3036**	1/7	3·75	·95	232	346	414	700	1110	

* Oil immersion. † Including stop to reduce aperture to ·95 N.A. ‡ Provided with correction collar for using cover glasses of different thicknesses. "M" in catalogue number signifies a metallurgical object glass with bloomed surfaces. These are strongly recommended for this work.

Where possible achromatic object glasses can be short mounted at an extra cost of £1 each and apochromatic object glasses at an extra cost of £2 each.

No. 3234a, 4 m/m, has a working distance sufficient for use with a hæmacytometer

Beck Reflecting Objectives.
(Prov. Patent)

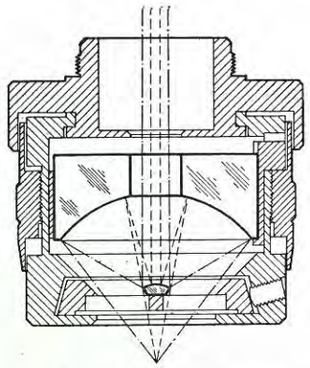

Two reflecting objectives are now available. These have been developed on designs from the Wheatstone Laboratory and Medical Research Council Bio-physics Research Unit at King's College, London. They have the following features :—

(a) All radiations from the infra-red to the ultra-violet regions of the spectrum are transmitted.

(b) Apart from slight chromatic errors introduced by the cover glass, which can be corrected by the addition of a suitable lens behind the objective, they are perfectly corrected for chromatic aberration throughout the entire spectral range.

(c) They are well corrected for spherical aberration and have a particularly flat field of view.

(d) The working distance is much longer than with any comparable refracting objective.

These objectives should find particular favour with biologists interested in the ultra-violet region of the spectrum. They are, however, equally suitable for normal visual observations of transparent or opaque specimens. The long working distance makes them most useful for use with a hot stage or for making observations near or inside a furnace.

The objectives are fitted with a collar on which are engraved figures representing the thickness of the cover glass, in thousandths of an inch. This scale moves against a second scale divided so that each division represents 20 m/m. change in the tube length. Aberration introduced by variations in thickness of cover glass, and in the optical tube length employed, can be eliminated by varying the separation of the mirrors. The action of the collar is to provide this adjustment and the scales enable the operator, once having determined the cover glass thickness and the tube length, to set the two scales until the appropriate divisions match up and the objective will then be in adjustment for the given conditions.

The front mirror is provided with centring screws which enable the two mirrors to be brought exactly co-axial. The design is extremely robust and will stand considerable usage of the normal type. It is, however, recommended that the objective be checked both for centre and for separation adjustment periodically to ensure that no error has appeared. For this purpose a " silver point " test object should be employed, (see page 71).

In order to achieve the best results of which the objective is capable, critical illumination will be required and this is best achieved by using a second reflecting objective as the condenser.

The objective is fitted with the standard R.M.S. thread and has a maximum outside diameter of 1.5 in. (38.1 m/m.) and is 1.47 in. (37.3 m/m.) long. It is supplied in a wooden case, which also holds the keys for adjusting the centration of the front mirror.

No.	Focal length. m/m.	Magnification at 160 m/m.	Numerical aperture.	Central obstruction of N.A. %	Central obstruction of area. %	Working distance (approx.) at 160 m/m.	£ s. d.
4035	2·6	74	·65	35	12·5	2·5	
4038	3·5	52	·65	42	17·5	3·5	

The special microscope stand designed to obtain the full advantages of the use of reflecting objectives will be found illustrated and described on pages 34 and 35.

Newton Long Working Distance Objective (Patent)

This consists of an attachment to the standard 8mm. and 4mm. objectives, the mountings of which are modified for the purpose.

In many fields of research, progress has been hampered, due to the difficulty of obtaining the necessary working distance between object glass and specimen. Particularly, this is true when it is desired to observe under microscopical conditions a specimen on which some operation is being performed, or which is at a considerable temperature, or the nature of which demands that, of necessity, it must be viewed through a thickness of transparent material.

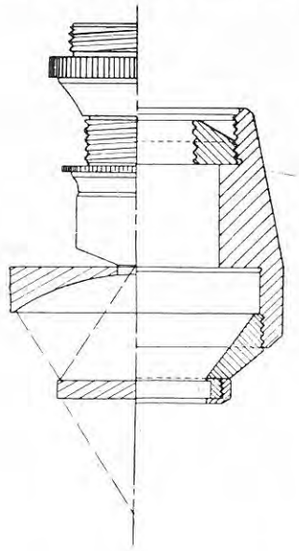

The attachment consists of an aluminised spherical concave mirror, placed at the position where the object is at the centre of curvature, giving unit magnification. At a midway position between this mirror and the object, a semi-aluminised plane mirror reflects the image into the focal plane of the object glass. With each power of object glass the working distance from the front of the attachment to the object glass is 12.8mm. but due to the light being incident twice upon the semi-aluminised mirror, there is a considerable decrease in illumination, which can be compensated by an increase in the power of illuminant employed.

The image is reversed by the attachment, neutralising the reversal obtained by the microscope, consequently an upright image is produced, which is advantageous for dissecting and similar purposes.

The optical corrections of the objective are unimpaired, the mirrors being arranged to eliminate axial spherical errors and the effect upon resolution is very small.

The length of the attachment including the objective is 1.7 in. and the maximum diameter 1.6 in., consequently no difficulty arises in using it on a normal microscope. To reduce the weight to a minimum the mounting is manufactured in aluminium alloy.



No.	Focal length mm.	Magnification	Numerical aperture	Working distance mm.
2285	8	× 20	0.574	12.8
2286	4	× 40	0.574	12.8

Microscope Eyepieces.

All eyepieces are made to fit easily into the Royal Microscopical Society's No. 1 Standard, ·917 in. diameter. They are designated by their focal length, and their magnifying power is given for the distance of distinct vision 250 m/m., and is engraved on each eyepiece.



Huygenian eyepieces

	Focal length.	Magnifying power.
No. 3688	50 m/m.	× 5
No. 3260	42 „	× 6
No. 3689	30 „	× 8
No. 3261	25 „	×10
No. 3262	17 „	×15
No. 3263	25 „ with indicator	×10
No. 3264	Eyepieces Nos. 3260 to 3262, with cross lines	

Micrometer eyepieces. These are fitted with micrometer scales reading to .1 m/m. and are provided with a focussing top lens.

	Focal length.	Magnifying power.
No. 3684	42 m/m.	× 6
No. 3687	25 m/m.	× 10

Compensating eyepieces. These eyepieces are specially corrected for use with apochromatic object glasses and should always be used with them to obtain full advantage of the corrections of these object glasses.

	Focal length.	Magnifying power.
No. 3266	45 m/m.	× 6
No. 3267	30 „	× 8
No. 3268	22 „	× 11
No. 3269	15 „	× 17
No. 3270	10 „	× 25

Projection eyepieces. These are specially corrected for photomicrography and projection and give a flatter field than the lower power Huygenian and compensating eyepieces.

	Focal length.	Magnifying power.
No. 3685	42 m/m.	× 6
No. 3686	25 „	×10

Wide field eyepieces. These eyepieces give a field of view about 40% larger than either the Huygenian or compensating eyepieces and are especially useful for searching. They also have an advantage for those who use spectacles in that the eyepoint is further away from the upper lens.

	Focal length.	Magnifying power.
No. 3773	25 m/m.	×10
No. 3774	21 „	×12
No. 3775	17 „	×15

No. 3778. Double demonstration eyepiece ... ...

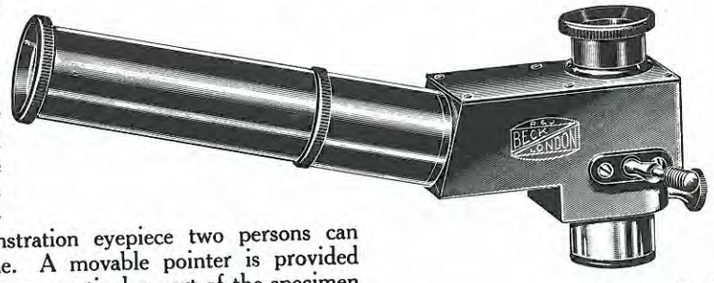

In instructional work, an observer using a microscope frequently desires to show the object under examination to a second person and point out some feature which he wishes to demonstrate. This is difficult with the ordinary microscope, but with the double demonstration eyepiece two persons can observe an object at the same time. A movable pointer is provided which is visible in both fields, so that any particular part of the specimen can be indicated. The great assistance which this piece of apparatus can render in teaching can be readily realised.

Microscope Eyepieces.

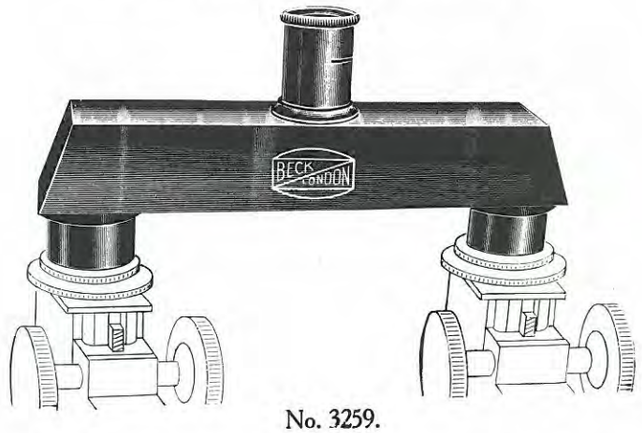

No. 3259.

No. 3259. Comparator eyepiece ... ...

This eyepiece is for use with two microscopes, for giving in one eyepiece, the images in each microscope combined into one field of view for comparison purposes.

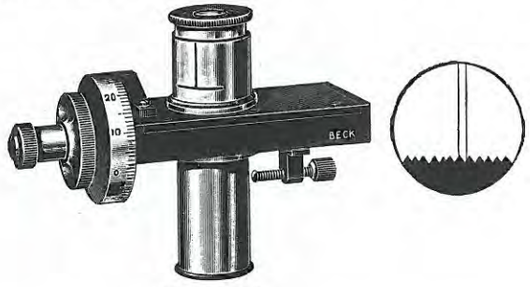

No. 3276A.

No. 3276A. Cobweb eyepiece micrometer ... ...

This eyepiece has two cobwebs, one of which is fixed and the other is movable by a micrometer screw. The screw has a millimetre pitch and a drum divided into 100 parts, each division reading 1/100 millimetre. The saw-shaped scale of teeth is so arranged that each tooth is equal to one turn of the screw.

No. 3779. Angular eyepiece attachment, without eyepiece, for use with any standard (·917 in.) eyepiece ... ...

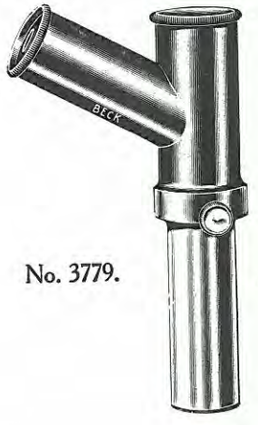

No. 3779.

When it is necessary to use a microscope vertically, the observer finds that his position gives considerable discomfort. The angular eyepiece bends the path of light so that the eyepiece projects from the microscope at a convenient angle for observation. It will accommodate any power of eyepiece of the standard gauge (·917 in.) and has a correcting lens to compensate for the increased optical path.

No. 3258. Goniometer eyepiece, ...

This eyepiece has rotating crosswires and reads to 10 minutes. It has a divided circle of 2½" diameter. It is made of the standard size (·917 in.)

High Power Binocular Eyepiece.

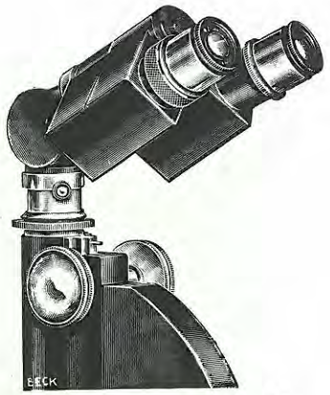

No. 3781. Inclined model.

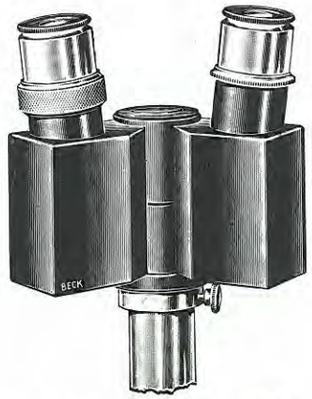

No. 3780. Straight model.

The binocular eyepiece converts a monocular microscope into a thoroughly efficient binocular instrument. It has all the qualities of the binocular bodies which are built into microscopes. It can be used in conjunction with objectives of all powers. As the full aperture of the object glass is used in each eye, the resolution is unimpaired. A corrector is supplied to compensate for the increased optical path. The two tubes of the binocular are set in relation to each other at the normal convergence for near objects. The interocular distance is variable from 47 to 78 millimetres, and is adjusted by turning the two tubes on a common centre, the tubelength remaining unaltered.

The high power binocular attachment is made in two forms, No. 3780, being the straight model and No. 3781 the inclined model. The model No. 3781 allows the microscope to be used vertically, the eyepieces being thus inclined in a convenient position for observation.

The model No. 3780 is suitable where the microscope is used at an inclined position.

The binocular eyepiece is made for use with microscopes of our make and with many other instruments. It is advisable for us to have the drawtube of the instrument to ensure that there are no obstructions, which would prevent its insertion.

For use with these attachments we have introduced a power ×6 eyepiece, which has a specially long eyepoint (eye relief) and due to the extra comfort afforded in use, we advise the selection of this type in preference to the ordinary ×6 Huygenian eyepieces.

No. 3780. High power binocular, straight model (without eyepieces) ... ...

No. 3781. High power binocular, inclined model (without eyepieces) ... ...

No. 3260b. Huygenian eyepieces, ×6 (42 m/m.), with long eyepoint (eye relief) ... per pair

No. 3261. Huygenian eyepieces, ×10 (25 m/m.) ... ... „ „

Dark Ground Illuminators.

No. 3293. Beck focussing dark ground immersion illuminator, in plain substage fitting ... ...

No. 3294. Ditto, in centring substage fitting ... ...

This illuminator can be accurately focussed for a slide of any thickness from ½ m/m. to 1½ m/m. It has great advantage over the non-focussing condenser, in that, where it is desired to examine already mounted specimens, the thickness of the slide upon which they are mounted is immaterial, provided it is between the above stated limits. In general routine work, the selection of slides for thickness is obviated.

The peculiarity of dark ground illumination is that the light is focussed to one definite position and unless this position coincides with the object, the latter will not be illuminated at all. As the illuminator must be in immersion contact with the lower surface of the slide, it cannot be moved up and down to alter its focus. For this reason a fixed focus dark ground illuminator can only be used with slides of a given thickness for which the illuminator has been made.

In the Beck focussing dark ground illuminator the optical portion consists of two lenses, C and D (Fig. 2), and the lower lens, D, can be moved up and down while the upper lens, C, remains in immersion contact with the slide B. By means of the lever projecting from the mount at the lower end (C, Fig. 3) the focus of the illuminator is adjusted for a slide of any thickness between ½ m/m. and 1½ m/m.

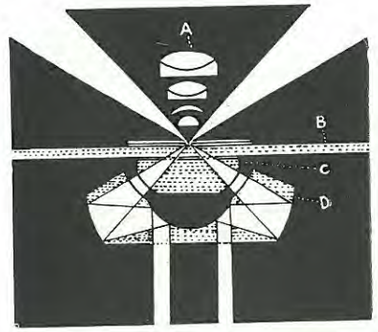

Fig. 2.

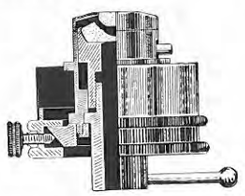

Fig. 3.

When this illuminator is used on slides varying from 1 m/m. to 1½ m/m. the cone of light which it transmits to the object is between 1 N.A. and 1·4 N.A., which enables any object glass with an aperture not higher than ·95 N.A. to be employed with it. If, however, a slide is used that is not thicker than ½ m/m., when the illuminator is focussed for this thickness the angle of the cone of light is altered so that its angle is between 1·25 N.A. and 1·4 N.A., and an object glass with an aperture of 1·2 N.A. can then be employed.

The front lens of the illuminator can be unscrewed and it then forms an excellent dark ground illuminator, which can be used dry and not in immersion contact with the slide, with low powers whose angle does not exceed ·7 N.A.

No. 3296. High power dark ground immersion illuminator, in plain substage fitting ...

No. 3297. Ditto, in centring substage fitting ... ...

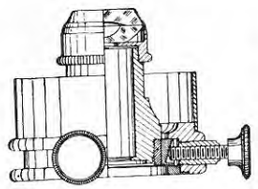

No. 3297

This illuminator throws upon the object a hollow cone of light between 1 and 1·3 N.A. (Fig. 4). It must be used in immersion contact with the slide and the slide must be 1 m/m. thick or the light will not be in focus.

It is specially intended for use with object glasses of high power, as it gives a very small but brilliantly illuminated spot of light. Object glasses with an aperture greater than ·95 N.A. require to be stopped down by the insertion of a diaphragm behind the back lens.

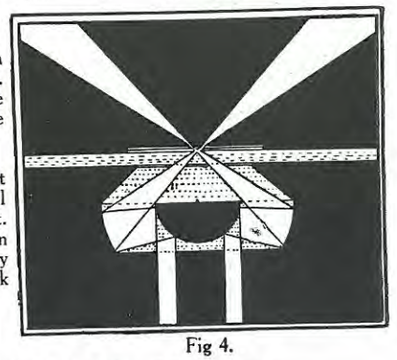

Fig 4.

No. 3482. Pinhole diaphragm for centring, in mount with standard R.M.S. object glass thread ... ...

Substage Condensers and Apparatus.

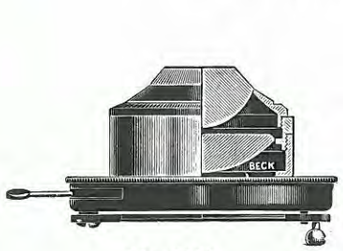

No. 3286.

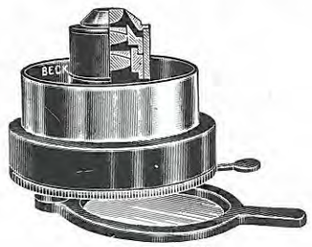

No. 3288.

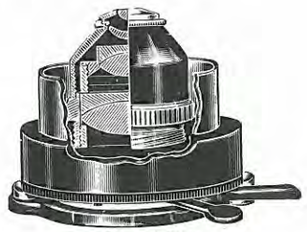

No. 3291.

No. 3286. **Abbe condenser,** with iris diaphragm and swing out tray for colour screens and patch stops, with green and ground glass screens ... ...

No. 3286P. Set of 3 patch stops for No. 3286 ... ...

No. 3220. **Aplanatic condenser,** 1·4 N.A., with iris diaphragm and swing out tray for colour screens and patch stops, with green and ground glass screens ... ...

No. 3220P. Set of 3 patch stops for No. 3220 ... ...

No. 3287. **Beck dry achromatic condenser,** 1 N.A., with standard object glass screw ...

No. 3288. **Beck dry achromatic condenser,** 1 N.A., in mount with iris diaphragm and swing out tray for colour screens and patch stops, with green and ground glass screens

No. 3288P. Set of 3 patch stops for No. 3288 ... ...

No. 3291. **Beck dry and immersion achromatic and aplanatic condenser,** 1·3 N.A., in mount with iris diaphragm and swing out tray for colour screens and patch stops, with green and ground glass screens ... ...

No. 3291P. Set of 3 patch stops for No. 3291 ... ...

No. 3645. **Achromatic condenser,** dry, .95 N.A., with large lenses in mount with iris diaphragm and swing out tray for colour screens and patch stops, with green and ground glass screens ... ...

No. 3645P. Set of 3 patch stops for No. 3645 ... ...

No. 3666. **Quartz condenser** for fluorescence work, mounted to fit the standard substage

No. 2189. **Chance Parsons filter,** for fluorescence work. 2 in. × 2 in., No. 14, ultra-violet, isolating wave length of 3,000-4,000 A.U. ... ...

No. 3678. **Mirror,** for fluorescence work. With aluminium reflecting surface for ultra-violet light, 2 in. dia., flat, unmounted ... ...





No. 3345.

No. 3345. **Polarising apparatus,** comprising polariser in revolving fitting to fit to substage, analyser in revolving fitting to fit over eyepiece. The polarising element is "Polaroid." Selenite plate is provided with polariser ... ...

Beck Substage Illuminator.

The Beck substage illuminator is a complete lighting unit, replacing the mirror of the microscope and giving a self-contained illumination, independent of any outside lighting source. Once the illuminator has been attached, the instrument remains ready for instant use, with its illumination permanently adjusted. The illuminator can be used with both substage condensers and dark ground illuminators. The lamp is 3.2 watt 4 volt and gives an intense light. It is run from mains by means of a transformer (for alternating current). A dimming device is provided so that the intensity may be regulated for the various powers in use and class of object under examination.

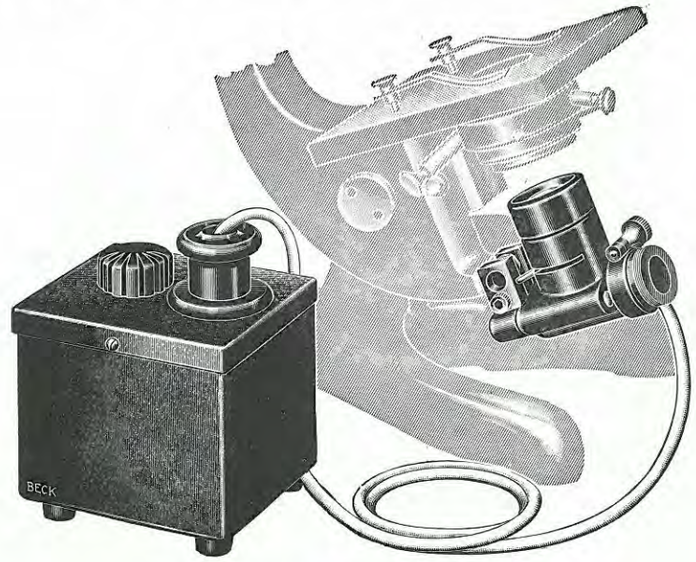

No. 2094/5

An iris diaphragm fitted in the illuminator restricts the illumination to the field of view being observed, thus avoiding glare from the surrounding portions of the field. The general design of the attachment may be seen from the illustration.

The illuminator can be fitted to any of the No. 47 or No. 48 models, which can be supplied fitted with it in place of the mirror. It can also be supplied to owners of these microscopes for attachment.

The operation of fitting is very simple as the illuminator clamps into the hole at the base of the limb into which the mirror fits. Instructions for correct fitting and adjustment are issued with it. A slightly modified fitting is available for attaching it to our earlier No. 29 microscope.

No. 2094. **Beck substage illuminator,** to fit No. 47 and No. 48 microscope ... ...

No. 2097. **Beck substage illuminator,** to fit No. 29 microscope ... ...

No. 2095. Transformer with dimming device for alternating current ... ...

No. 2096. Spare bulbs ... ... each

Beck Phase Contrast Apparatus.

The phase contrast method of illumination provides a means of viewing detail in transparent specimens which have slight differences in thickness and refractive index in their structure, but in which the structure would not be visible by other forms of illumination technique.

The Beck phase contrast apparatus gives the means of utilizing this form of illumination in the simplest manner compatible with the provision of the necessary adjustments to gain the greatest advantage from the method.



The apparatus can be employed on any microscope of standard design preferably with a centring substage. The equipment consists of the following parts :—

(a) Special substage condenser, 14 mm. focus, to fit into substage with standard R.M.S. diameter of 1.52 in. or fitted with quick-change ring to fit Beck No. 47 Microscope centring substage.
(b) Centring trays, one for each objective used, with annulus stop. These are attached to the substage condenser by quick-change method. Each is engraved with the focal length of the object glass with which it is used.
(c) Two keys for adjusting centration of annulus trays or object glass fittings.
(d) Filter to give green light from a white light-source or to filter out the " e " line from mercury vapour lamp.
(e) Observing microscope to fit in place of microscope eyepiece, to view back focal plane of objective.
(f) Nosepiece pinhole.
(g) Case to contain apparatus, allowing a maximum of four substage annulus trays.

Beck Phase Contrast Apparatus.

Object glasses with phase-plates are supplied either with or without centring fittings. Quick change centring fittings are recommended, due to the accuracy with which the object glasses can be centred by their means and also the convenience of the quick method of exchange. Their use is, nevertheless, not essential.

The range of objectives fitted with phase-plates is as follows :—

16 mm. N.A. 0.28

8 mm. N.A. 0.54

4 mm. N.A. 0.85

2 mm. N.A. 1.30 (oil immersion).

Objectives with centring fittings are supplied in a case to hold a maximum of four, together with two keys for operating the centring screws as shown on page 58. When objectives are supplied without centring fittings, each is contained in a metal case with screwed lid.

No. 2011. Beck phase contrast apparatus as described above, with 4 objectives and centring fittings for each objective, adapter for attachment to microscope body and cases to contain phase-contrast apparatus and four objectives with centring fittings

No. 2010. As above but without centring fittings for objectives ... ...

Any object glass may be omitted if the full range is not required, at an appropriate reduction in price.

The adaptation of object glasses for phase contrast illumination does not impair their performance with other forms of transparent illumination.

A booklet giving full details of the Beck phase contrast illuminating apparatus together with description of its method of use is available and will be sent on application.

Beck Phase Contrast Microscope.

This microscope is a Model 47L as described on pages 16 and 17 with a special substage for the convenient use of the phase contrast illuminating apparatus as described above. It is fitted with the complete apparatus, No. 2011 and two eyepieces $\times 6$ and $\times 10$. By replacing the special condenser with an ordinary substage condenser, the microscope is rendered suitable for ordinary work with transmitted light, and condenser No. 3288 is included for this purpose.

No. 2281. Beck phase contrast microscope in case ... ...

Beck-Chapman Opaque Illuminator.

For critical illumination of opaque objects, i.e., surface structures, glazes, tissues, seeds, grains, powders, metals and similar objects, the Beck-Chapman illuminator is unsurpassed. The area of the object is unrestricted and the self-contained light source simplifies adjustments where objects of varying thicknesses are being examined. In the image obtained when examining polished metal surfaces, the reverse appearance to that obtained with vertical illumination is given and this form of illuminator is generally only used in metallurgical work for obtaining dark ground effect.



The construction of this apparatus is shown in the figure below. The light from a small electric bulb (A) is directed from the side, into the microscope, through a condensing lens (B), upon a mirror (C) placed above the object glass (D). The mirror has an aperture in the centre. The mirror throws an annular ring of light upon metal reflectors (E, E′ and E″), which surround the object glass and concentrate the light upon the focal plane of the object glass giving a brilliant illumination upon any object or surface being examined. The light falls upon the object in the form of a hollow cone, so that no direct light enters the microscope and the object is rendered visible by reflected light. This method eliminates reflections and does not produce glare and haze in the image.

The self-contained source of light consists of a 4-volt lamp with condensing lens, in a well ventilated lamp-house, provided with all necessary adjustments. This lamp may be used with batteries or accumulators, or with suitable resistance or transformer from the mains. The mount of the illuminator, with its angular mirror, lamp-house and condenser, screws into the microscope by means of a revolving fitting (G). Its lower portion has a dovetailed slide (H) into which the various object glasses, with their reflectors are fitted. Object glasses $1\frac{1}{2}$ in. (32 m/m.), $\frac{2}{3}$ in. (16 m/m.), $\frac{1}{3}$ in. (8 m/m.) and $\frac{1}{6}$ in. (4 m/m.) are available for use with this illuminator. The construction of the reflectors is varied according to the magnifying power of the object glass, so that either a larger or smaller field of view is illuminated. The illustration shows the two different forms.

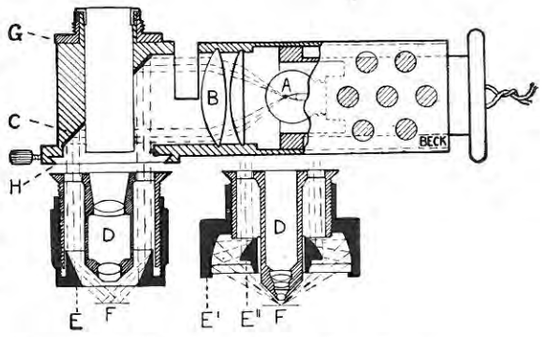

No. 2340. Beck-Chapman illuminator, mount only, with lamp-house, illuminant, mirror and condenser, green and ground glass screens, in case ... ...

No. 2341. $1\frac{1}{2}$ in. (32 m/m.) Object glass, with reflector ... ...
No. 2342. $\frac{2}{3}$ in. (16 m/m.) Object glass, with reflector ... ...
No. 2343. $\frac{1}{3}$ in. (8 m/m.) Object glass, with reflector ... ...
No. 2344. $\frac{1}{6}$ in. (4 m/m.) Object glass, with reflector ... ...
No. 2095. Transformer with dimming device for alternating current ... ...
No. 2096. Spare bulbs ... ... each

Wrighton-Beck Metallurgical Illuminator.

The Wrighton-Beck vertical illuminator applies the latest method of metallurgical illumination in a compact piece of apparatus which can be attached to any microscope. This illuminator renders any ordinary microscope suitable for metallurgy, as the illuminant and the whole train of lenses and diaphragms move with the body and there is no necessity for a focussing stage which is generally supplied on metallurgical microscopes. The apparatus contains its own illuminating source and the necessary lenses and diaphragms to give complete control of the light. The illustration on page 32 shows the illuminator as fitted to the microscope.

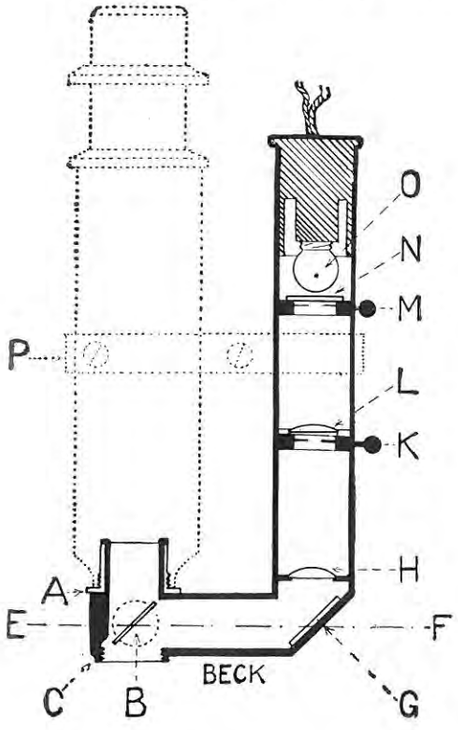

The collar (A) has the standard R.M.S. thread by which the apparatus can be fitted to the microscope, and at (C) the object glass is attached.

A thin glass reflector is carried in a fitting at (B) which is operated by two milled heads, one of which rotates it on an axis (E F) and the other on an axis at right angles to this.

A tube which is parallel to the body of the microscope carries at its upper end (O) a lamp rated at 4-volts 3.2 watts. This lamp bulb is placed close to a ground glass (N) which forms the source of illumination.

Immediately below the ground glass (N) is an iris diaphragm (M) by which the size of the source of illumination can be varied. Near the centre of the tube at (K) is a second iris diaphragm which is so placed that by means of the lens (H) its image is always in focus upon the specimen when the standard tube length of the microscope (160 m/m.) is used. That is to say, the distance of the image of the diaphragm (K) formed by the lens (H) is at the same distance from the reflector (B) as the image formed in the eyepiece, giving what is known as critical illumination. A lens (L) is placed close to the iris diaphragm (K) of such a focal length that in combination with the lens (H) it forms an image of the source of light (K) close to the back lens of the object glass being used.

By means of the iris diaphragm (M) the illuminating beam of light can be made to just fill the whole of the back lens of the object glass or to use a smaller portion of its aperture, and cuts off all extraneous light reducing glare to a minimum. By means of the iris diaphragm (K) the area of the specimen which is illuminated can be regulated, thus securing maximum contrast.

A stainless steel mirror (G) at an angle of 45° is used to turn the beam of light through a right angle.

No. 1193. Wrighton-Beck metallurgical illuminator ... ...
No. 1194. Adjustable resistance for 100 to 250 volts ... ...
No. 2095. Transformer with dimming device for alternating current ... ...
No. 1195. Clamp (P) to fix the lamp end of the apparatus to the body of the microscope ...
No. 2096. Spare bulbs ... ... each

Beck Objective Changer.



Nos. 1820, 1821 & 1822

The Beck objective changer is on a new principle which ensures great accuracy in working and ease of manipulation. Both in the method of attachment of the object glass and in the simplicity of centration it is in advance of previous types of changer. It is made throughout in a specially hard steel, so that wear is practically eliminated. The illustration above shows the general appearance of the set of objectives with centring fittings in case. The figure shows, diagramatically, the various parts. The adapter (L) is secured to the nosepiece of the microscope by clamp ring (M) which passes through it and is engaged in the R.M.S. objective thread and clamped home with the key (R) which fits into the two slots provided. The centring fitting (N) takes the object glass and is attached, in use, to the adapter (L) by a simple rotary movement. Two hexagon-ended keys are provided which fit at (O) and by means of which the adjustment for the centration of the objective is made. Tension is maintained throughout the adjustment by the spring plunger (P.)

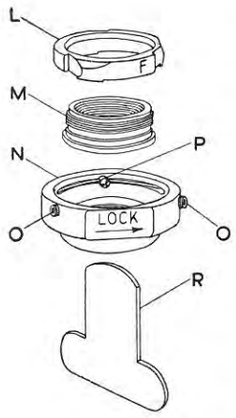

No. 1820. Beck objective changer and keys ... ...

No. 1821. Centring fittings for changer, one required for each objective ... ... each

No. 1822. Case to contain four centring fittings with objectives and keys ... ...

Nosepieces.

These are accurately manufactured to give correct centration of the object glass and are of the dust-tight pattern.



No. 3301.

No. 3300. Double nosepiece ... ...

No. 3301. Triple nosepiece ... ...

No. 3302. Quadruple nosepiece ... ...

Vertical Illuminators.

No. 4960. Vertical illuminator, with adjustable illuminating prism or thin glass reflector. This illuminator gives two adjustments to the reflector, one of which moves the light up and down, and the other right and left ... ...

No. 4960A. Thin glass or prism reflector (extra) for No. 4960

No. 4961. Polarising vertical illuminator, as No. 4960, with prism illuminator, but with the addition of a "Polaroid" in revolving fitting ...

No. 4962. Thin glass reflector with adjustments, interchangeable with prism reflector of No. 4961 ...

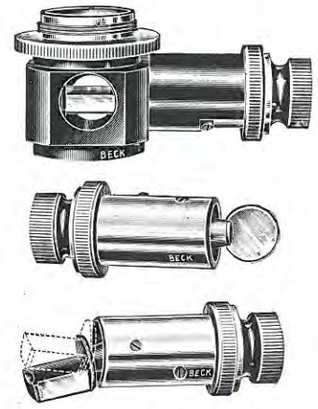

Nos. 4960 & 4960A

Drawing Apparatus.



No. 3370.

No. 3370. Abbe camera lucida in case ... ...

This apparatus is made for the production of correct drawings of images seen through the microscope. It consists of a prism mounted to fit over the eyepiece of the microscope and a large mirror placed a few inches from it. The prism is silvered but has a small clear aperture in its centre. The paper upon which the drawing is made is reflected by the mirror into the prism and in turn by the silvered surface of the prism into the eye. At the same time the object is seen through the clear aperture in the prism. Thus the object is seen superimposed upon the paper and can be readily drawn. This Abbe camera lucida is of rigid design and is made of a light metal, so that the total weight is 7 oz. The fitting carrying the prism is hinged and can therefore be readily turned aside when not desired for use, or for changing eyepieces. A series of neutral tint glasses for equalising the light in the two fields are mounted in a revolving fitting. The microscope should preferably be used vertically, but if inclined, the drawing paper must be set in the same plane as the stage.

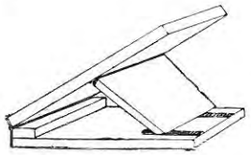

No. 3375.

No. 3375. Drawing table, adjustable for angle, for use with camera lucida ... ...

No. 3662. Right angle prism, mounted to fit over eyepiece for projection or drawing ...

Photomicrographic Cameras.

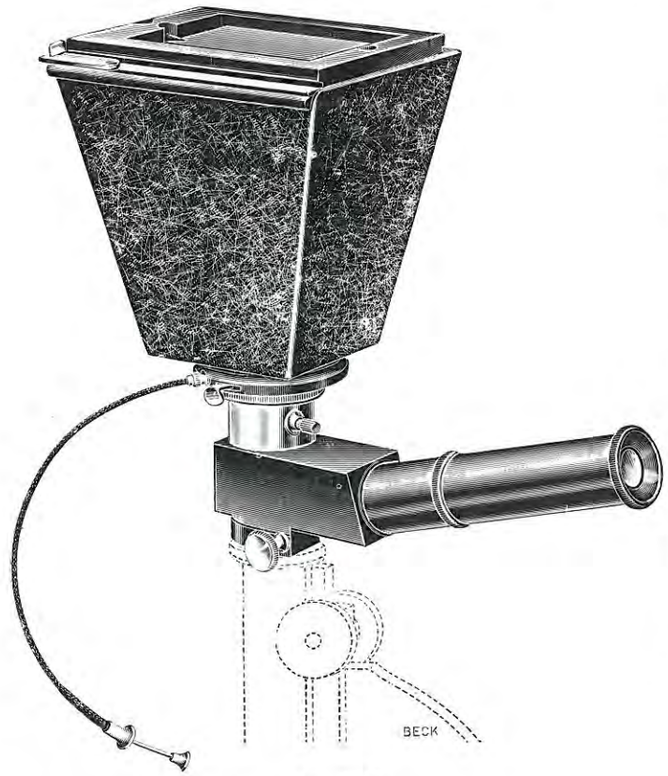

No. 3657

No. 3657. Eyepiece camera with 2 single metal plate holders ... ...

No. 3658. Single metal holders, extra ... ... each

The No. 3657 Eyepiece camera is provided with an observing tube so that the position and focus of the object can be set and observed up to the moment of making the exposure. An exposing shutter is fitted, operated by an antinous release. A ground glass screen enables the focus to be checked. The plates which are $3\frac{1}{2}$ in. $\times$ $2\frac{1}{2}$ in. are carried in metal plate holders. The upper part, i.e. the camera body, may be detached and the observing portion used as a double demonstration eyepiece as No. 3778. (page 48).

No. 3654. Eyepiece camera, complete with two single metal plate holders ... ...

No. 3655. Extra single metal plate holders ... ... each

This camera is for use over the eyepiece of the microscope and consists of an aluminium tapered box $6\frac{3}{4}$ in. long. The upper end is fitted with a frame which carries a focussing screen or single metal plate holder. The lower end is fitted with an exposing shutter. Into this shutter is screwed an adapter which fits over the drawtube of the microscope. The adapter is provided with a clamping screw to ensure the camera being rigidly held in position. The shutter is actuated by an antinous release. The size of the plate which the single metal plate holders carry is $\frac{1}{4}$-plate ($4\frac{1}{4}\times3\frac{1}{4}$ in.). The camera is extremely light in weight the total weight including a single metal slide being 15 ozs.



No. 3654.

Photomicrographic and Macroscopic Camera.

In addition to the need for a photomicrographic camera for photography through a microscope, with which any magnifying powers from about twenty upwards are obtainable, it is often desired to photograph larger objects at low powers up to twenty magnifications. For such purposes a microscope is not required, but a method of holding, focussing and illuminating the object is necessary, as also are the suitable macroscopic lenses for this class of work.

The apparatus here described consists of two main independent parts, i.e. the vertical camera which for photomicrographic work is employed with any suitable microscope, and the macroscopic stand designed to work with it to take low power photographs direct by means of specially computed "Microstigmar" lenses.



No. 2259. Camera for photomicrography used with microscope.

The camera is of the vertical type, the general design of which can be seen from the illustration. The most important feature of a camera for these purposes, which may involve the use of very high magnifying power, is rigidity and stability. The whole instrument is constructed with a view to ensuring that these conditions are fulfilled The base plate is a heavy iron casting measuring 12 inches $\times$9 inches. The top surface is machined accurately smooth and flat, so that when the microscope or the macroscopic stand is placed upon it, there is no risk of movement or vibration. Into this is fitted a substantial vertical pillar carrying the camera. The camera is $\frac{1}{4}$ plate size and has a variable extention from 5 inches to 15 inches. The plates are carried in single metal plate-holders and a ground glass focussing screen is provided. An exposing shutter is fitted to the camera front. This gives a "bulb" exposure and is actuated by an antinous release. A light tight fitting connects the camera to the drawtube of the microscope.

The whole camera can be swung aside from the optical axis of the microscope, so that it is possible to observe direct through the microscope for arranging the object before photographing. A fitting carrying a 45° reflector is made, which is placed over the ground glass screen to facilitate examination during focussing.

In addition to its use with the microscope for high power work, the camera is employed with the macroscopic stand described on the following page.

Photomicrographic and Macroscopic Camera.



No. 2259, 2260 and No. 2261. Camera and Stand for macro-photographic work.

The Macroscopic Stand is for use with the vertical camera for taking macrophotographs at magnifying powers of from ×2 to ×20 where the use of a microscope is unnecessary. It consists of a substantial base which stands upon the base plate of the camera. This is fitted with a rigid vertical pillar carrying a 3½ in. diameter condenser lens, a stage with 2½ in. clear diameter aperture and a bracket for lining up the stand with the axis of the camera. The stage is provided with a rack and pinion focussing adjustment, so that delicate setting of the focus can be assured. A 45 deg. mirror reflects light from an outside source into the optical axis, for illuminating transparent objects.

The stand is used to carry and illuminate either transparent or opaque specimens up to 2½ in. diameter.

Two Microstigmar lenses are made which together with the variation of extension in the camera give an adequate range of magnifying powers between the limits stated. The corrections of these lenses give maximum covering power and flatness of field rendering them most suitable for photography of large objects. They have iris diaphragms and may be provided with reflectors for the illumination of opaque specimens.

A satisfactory illuminant for use with the reflectors is the Tenslite lamp described on page 66 of which a special model is made with the necessary extra height.

No. 2259. Vertical camera ¼ plate, with 3 single metal plate holders ... ...
No. 2260. Focussing screen for above with 45 deg. reflector ... ...
No 2261. Macroscopic Stand ... ...
No. 2262. Microstigmar lens 18 m.m. focus ... ...
No. 2263. Microstigmar lens 48 m.m. focus ... ...
No. 2264. Reflector for No. 2262 ... ...
No. 2265. Reflector for No. 2263 ... ...
No. 3655. Single metal plate holders ... ... each
No. 3516L. Tenslite lamp with extra height ... ...

Photomicrographic Apparatus.

The photomicrographic apparatus here described has been constructed to meet the requirements for a complete equipment of the horizontal type and utilizing plates up to whole plate size (8½ in. × 6½ in.). We are indebted to Dr. Aumonier of the Middlesex Hospital Medical School for initiating its design and production and for many valuable suggestions. It is only made to order and modifications, within limits, can be made to suit special requirements. Quotations can be made for outfits on receipt of particulars.

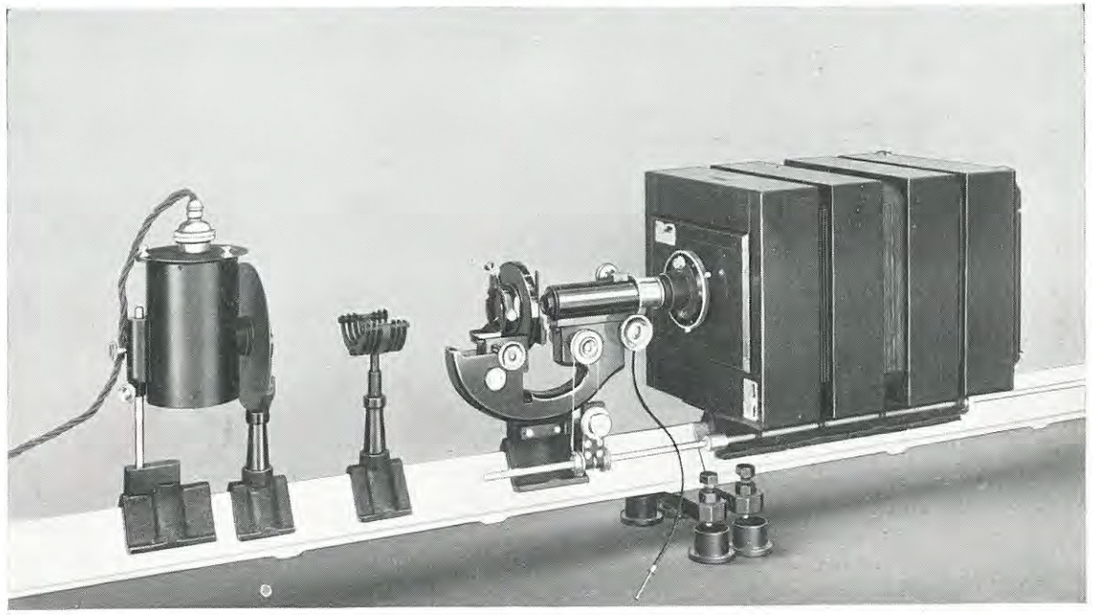

The apparatus is carried on two triangular section benches each 2 metres long. These are mounted on cross-bars with levelling screws and sockets for the correct levelling and alignment of the apparatus. One bench carries the camera which is of the square bellows type taking whole plates (8½ in. × 6½ in.) and having a maximum extension of 2 metres. A focussing screen and two double dark slides are provided. Carriers are fitted into the slides for the use of smaller plates down to ¼ plate size (3¼ in. × 4¼ in.). An exposure shutter is fitted.

The second bench carries the microscope and the illuminating apparatus. The microscope is similar to our No. 47, described in the earlier part of the catalogue. The limb is attached direct to a saddle piece, fitting on to the bench. The body has a rack and pinion draw tube. The stage has a rotating movement to allow the image of the object to be correctly placed on the plate and is fitted with mechanical adjustments for the lateral movement of the object.

The illumination is by means of a "Pointolite" with a condensing system of lenses. Provision is made for the use of colour filters.

A separate stage is provided for macro-photographic work, when the microscope is not employed, the photographic lens being held in a further fitting.

No. 2274. Photomicrographic apparatus as illustrated and described, without objectives, eyepieces or substage condenser ... ...

Suitable optical equipment may be selected from the catalogue.

Complete quotations can be given on receipt of specification of requirements.

Beck Electric Lamp.



No. 3332.

This lamp has been designed so as to provide a completely adjustable light source for all classes of microscopic illumination. It consists of a heavy circular base with an upright upon which the lamphouse moves in a vertical direction and upon which it also tips so as to alter the horizontal axis of the light. Both adjustments are provided with clamps. By means of the raising and lowering adjustment, the lamp can be placed in any position between 3 in. and 9 in. above the table. An adjustment is provided for the accurate alignment of the light source in the optic axis. The condenser can be focussed and clamped in the required position. Provision is made for the accommodation of an iris diaphragm and colour screens, 2 in. square. The complete adjustments render the lamp suitable for use with all methods of microscopic illumination. A 60 watt or Pointolite lamp can be employed as the illuminating source. The latter is strongly recommended for high power work, and especially for dark ground illumination. It is a very satisfactory illuminant, the source of light being a sphere of tungsten about 1/10 in. diameter, which when incandescent, has extreme intensity. This lamp is supplied of 100 c.p. for direct current, or 150 c.p. for alternating current, and is used in conjunction with a fixed resistance so that it is necessary to specify the voltage of the electric supply when ordering.

No. 3330. Beck electric lamp, with 60 watt lamp, condenser, ground and green glasses

No. 3331. Beck electric lamp with Pointolite 150 c.p. lamp and fixed resistance for alternating current, condenser, ground and green glasses ... ...

No. 3332. Beck electric lamp, with 100 c.p. Pointolite lamp and fixed resistance for direct current, condenser, ground and green glasses ... ...

No. 3680. Iris diaphragm ... ...

No. 3681. Achromatic and aplanatic condenser in place of ordinary condenser ... ... extra

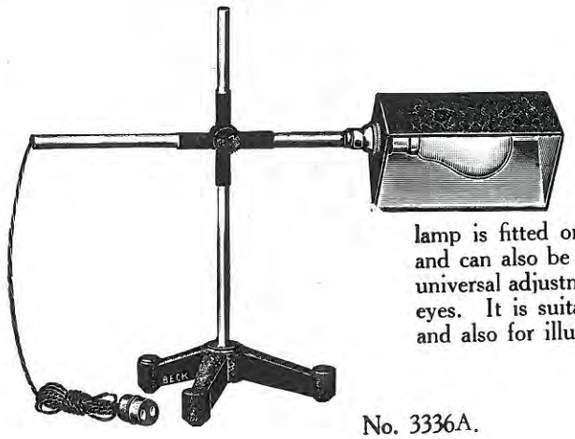

No. 3336A. Beck Reflex lamp, with 60 watt lamp, wiring and connector. ... ...

This consists of a heavy iron tripod stand with an upright, up and down which the arm carrying the lamp slides, so that it can be adjusted for height and can be rotated. The lamp is fitted on to an arm which slides in a horizontal direction and can also be rotated about a horizontal axis, so that practically universal adjustment is given. A shade shields direct light from the eyes. It is suitable for both transparent and opaque illumination and also for illuminating trays, dishes, etc., during dissection.

No. 3336A.

Beck Intensity Lamp.

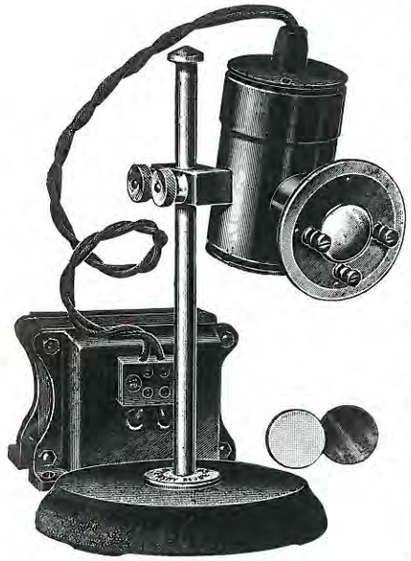

No. 3344T

The illuminant is of great intrinsic brilliancy and is suitable for all microscopic work, including dark ground illumination. The source of light is a closely coiled filament, and is contained in a tubular lamphouse fitted with a condensing lens which has focussing adjustment. Two forms of condenser are supplied, one a simple lens, the other a corrected combination which is achromatic and aplanatic. An iris diaphragm can be fitted, if desired. Ground and green glass screens are supplied. The lamphouse is mounted on a firm base, and can be adjusted for height and tilted to any angle, these adjustments being provided with clamps. It is run from a house supply. For direct current, an adjustable resistance is used, which operates from 100 to 250 volts. For alternating current, a transformer is employed, operating from 210 to 250 volts. The latter can be provided with a dimming device for regulating the intensity of the illumination. Flex and connector to fit the standard sized bayonet lampholder are supplied.

No. 3344 **Beck Intensity lamp,** on stand, with condenser, one ground and one green glass, with resistance for D.C.

No. 3344T. As No. 3344, but with transformer for A.C. ... ...

No. 3389. As No. 3344T but with dimming device

No. 3344B. **Beck Intensity lamp,** to work from accumulators on 12 volt current ...

No. 3344A. Iris diaphragm ... ... extra

No. 3344D. Spare bulbs ... ... each

No. 3682. Achromatic and aplanatic condenser, in place of ordinary condenser ... extra

No. 3625. Beck Simplex lamp ... ...

This lamp is suitable for general microscopic work, excepting dark ground illumination. The casing is strongly made and well ventilated, finished in crystalline enamel. The light source is a 60 watt lamp and the screen a special blue glass, giving an illumination equivalent to daylight.

The lamp is supplied complete with flexible wire and bayonet or pin adapter. In ordering, the voltage of the electric supply should be specified, also whether bayonet or pin adapter is required.



No. 3625

Beck Tenslite Lamp.



No 3516.

This lamp is a powerful illuminant for microscope work by all usual methods, including vertical, dark ground and phase contrast illumination. It is a complete unit with its transformer built in, and is provided with a dimming switch, so that the intensity of the light can be regulated to the amount required for the form of illumination being used and to suit the object under examination. The general design of the lamp may be seen from the illustration. It has full mechanical adjustments for raising and lowering and for setting at the correct angle. It is provided with a corrected condenser, which has a focussing adjustment, an iris diaphragm and slots for the accommodation of light filters or neutral screens. The illuminant is a 6 volt, 30 watt lamp with a closely coiled filament. The lamp can be run off any alternating current from 200 to 250 volts. Other currents require a special transformer, for which quotations can be furnished.

No. 3516. Tenslite lamp with ground and green glasses ... ...
No. 3517. Spare bulbs for above ... ... each

Light Filters.

This series of filters are made from Chance-Parsons filter glass. They have the advantage over gelatine filters, in that they will withstand heat. They are optically polished and made to a thickness of $2\frac{1}{2}$-3 m/m.

No. 1 Ruby, No. 2 Red, No. 3 Deep Orange, No. 4 Light Orange, No. 5 Green, No. 6 Blue-green, No. 7 Blue, No. 8 Purple, No. 9 Daylight, No. 10 Dark Neutral, light transmission 7.3%, No. 11 Light Neutral, light transmission 23.1%, No. 12 Dark Orthochromatic, No. 13 Light Orthochromatic, No. 14 Ultra-violet, isolating wavelength of 3,000-4,000 A.U.

No. 2187. Chance-Parsons filters, 2 in. × 2 in., all colours 1—13 ... ... each
No. 2189. Chance-Parsons filter, 2 in. × 2 in., No. 14 ... ...
No. 2191. Chance-Parsons filters as No. 2187, $1\frac{3}{16}$ in. or $1\frac{3}{8}$ in. dia. ... ... each
No. 2193. Chance-Parsons filter as No. 2189, $1\frac{3}{16}$ in. or $1\frac{3}{8}$ in. dia. ... ...

Mechanical Stages.

No. 3515. Mechanical stage ... ...

This stage is of built-in design and is illustrated on page 16. It has a travel of 3 inches in the horizontal and 1 inch in the vertical direction. Scales and verniers are fitted to both movements. This stage is fitted to Nos. 47L, 47LI, 48L, 48LI, 50, 2281 and 4196.

No. 3305. Mechanical stage ... ...

This stage is readily attached and removed from the plain stage. It has horizontal travel of 3 in. and vertical travel of 1 in. The racks are specially cut to a very fine pitch to give delicate and smooth motions. This stage is supplied for any of the No. 47 and No. 48 microscopes which have plain stages, i.e. Nos. 47A, 47B, 47C, 47CI, 48C and 48CI.

No. 3305 A. Mechanical stage ... ...

This stage is similar to No. 3305 but has a travel of 1.6 in. in the vertical direction and accommodates a slide 3 ins. × 2 ins.

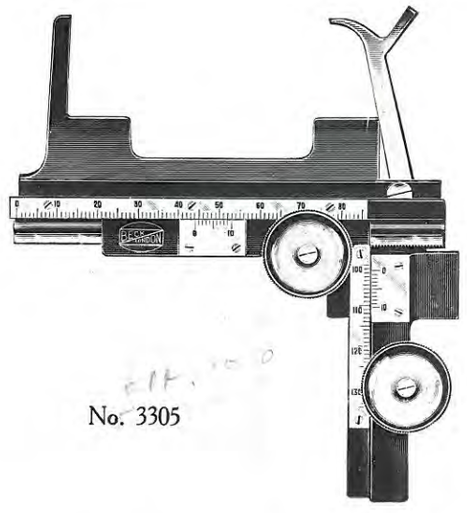

No. 3305

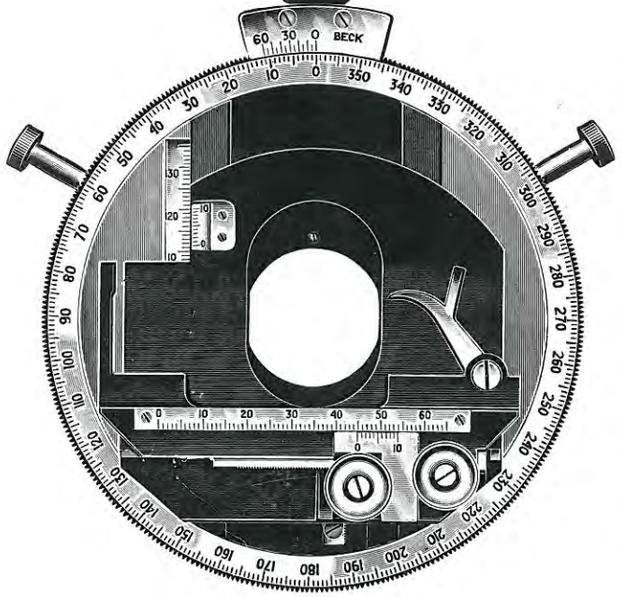

No. 3306

No. 3306. Concentric rotating mechanical stage ... ...

This stage is circular with revolving and centring adjustments. A clamp is fitted to the rotation. The mechanical movements have a travel of 3 ins. and 1 in. respectively and are actuated by milled heads as shown in the illustration. The racks employed are cut with very fine teeth giving smoothness and delicacy of movement. A scale and vernier is provided to each. The stage is divided on its edge in degrees and a vernier is fitted. This stage is fitted to Nos. 47K, 48K and 50.

Stages.

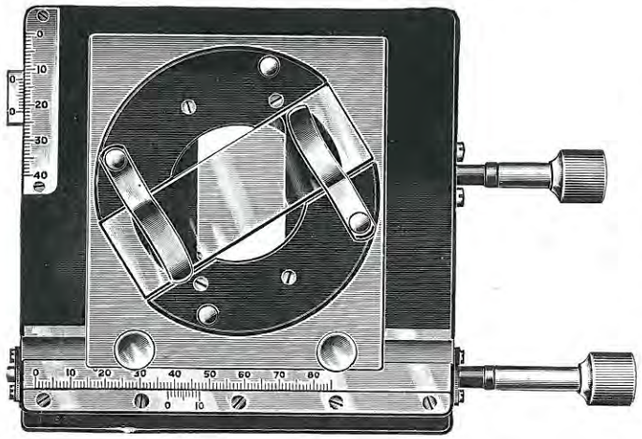

No. 3545 on Stage No. 3515

No. 3545. Revolving super-stage ...

A requirement for a revolving motion for the orientating of the object in addition to the lateral movements of a mechanical stage has lead to the designing of this stage.

Its construction may be seen from the illustration and it is suitable for attachment to stage No. 3515 being held by the clips provided for the glass slides usually employed ... ...

No. 3387. Electrically heated warm stage ... ...

The dimensions of the stage are $3\frac{1}{4}$ in. square and thickness $\frac{3}{4}$ in. The clear aperture is $1\frac{5}{8}$ in. and clips are provided for holding the specimen. The temperature is adjustable by means of a milled head at the side and there is an entry hole for a thermometer. When set. the temperature is maintained by means of a thermostat. A resistance lamp is used in the circuit, and the stage can be operated from either A.C. or D.C. supply within a range of 200 to 250 volts. The standard length of flex is 6 ft.

When ordering, the temperature and the voltage of the available supply should be specified.

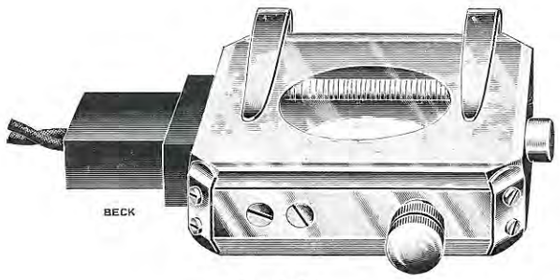

No. 3387.

No. 3422 Stage forceps. ... ...

These forceps form a very convenient method of holding small objects during examination. The holder carrying the forceps is rotatable in its mounting, ensuring that the object can be viewed in all positions.



No. 3422.

Grinding and Polishing Machine.

(for metallurgical specimens)

This machine is complete and self-contained, convenient and efficient in working.

The main frame of the machine consists of a substantial casting, as shown in the illustration. A vertical spindle (A) carries a grinding and polishing disc (B) $6\frac{1}{2}''$ diameter, driven by a small motor (L). The steel spindle (A) receives the disc (B) upon which the polishing or grinding material is placed; it is furnished with speed cone pulleys (F) and is driven from the driving cone (G) which is driven by the motor (L). By shifting the belt on the speed cone, a range of speeds varying from about 300 to 1,000 revolutions per minute can be obtained.

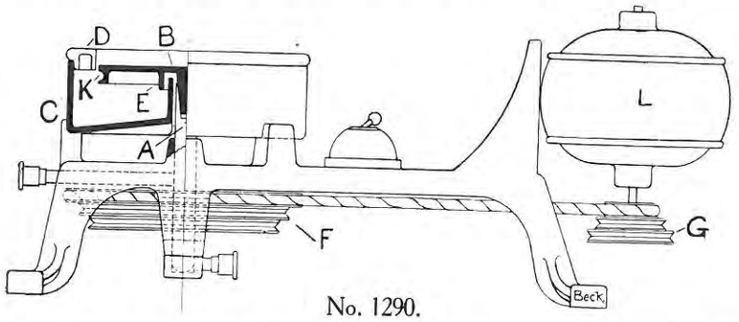

No. 1290.

The brass disc (B) fits by means of a tapered fitting into the spindle (A) which allows of its easy removal, a lip (E) projects downwards and prevents grinding material reaching the bearing. The cloth for polishing, or emery paper for grinding, is secured to the disc by a groove (K) in the edge of the disc. The paper or cloth is stretched over the surface of the disc and is held in position by means of a garter made of stiff spring, which fits the groove (K).

The disc is surrounded by a removable catcher (C). Into the top of the catcher is fitted a guard ring (D) which forms a rest for the hand, and has a flange which nearly touches the edge of the revolving disc and prevents specimens from falling into the catcher should they slip from the fingers.

When stretching paper or cloth upon the disc, the catcher (C) is removed and the disc (B) placed in the machine. The paper or cloth is placed on the disc (B) and the ring (D) pressed over the paper until it is about half-way down the edge of the disc (B). The spring garter is stretched over the edge. The ring (D) is now passed right down over the disc, and the garter is pressed home into the groove.

Should the disc at any time become so firmly fixed in the spindle that it cannot be removed by hand, a pair of lifting levers are supplied. The catcher is provided with a cover, and also with a tap for drainage.

No. 1290. Grinding and polishing machine (without motor) with one polishing disc, cover, catcher, disc lifter, drainage tap, 12 feet of connecting wire, plug adapter and tin of grease ... ...

No. 1292. Extra polishing discs (B) ... ... each

The above price does not include motor, which we supply at makers' current price. Quotations for the complete machine will be furnished on particulars being given of the voltage, etc., of the electrical supply. The particulars required are the voltage, whether the current is direct or alternating, and in the latter case the phase, cycle, etc.

No. 3805. Levelling device for metallurgical specimens ...

The specimen is placed upon a glass slide with a mounting compound and the slide is placed upon the stage of the instrument. The plunger is then lowered upon the specimen which is by this means accurately levelled upon the slide.

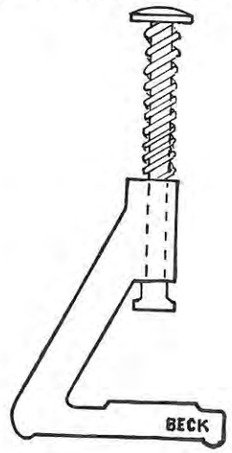

No. 3805.

Automatic Rotary Microtome.

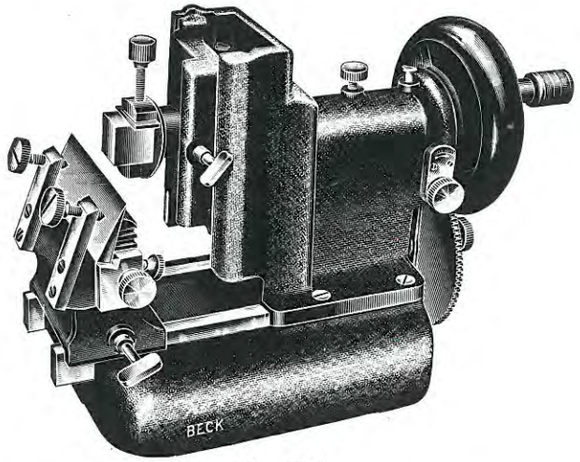

No. 3880.

The instrument is of very rigid design ; it can be very quickly set up to cut a perfectly uniform series of sections at the highest possible speed. The object holder consists of a clamp with universal adjustment for the angle of face around a point coincident with the surface of a block of material of the average thickness, so that there is no lateral displacement when orientating. The clamp is adapted to take standard wood blocks 19 m/m. × 19 m/m. × 12 m/m. The knife holder is provided with an adjustment for position with respect to the block surface. It is fitted with screws permitting the angle of the knife to be precisely adjusted. There is also an adjustment provided so that knives of varying widths can be employed. The micrometer slide for the feed is extremely heavy and is carried in channels in the base of the instrument. The micrometer screw is direct acting and the feed, consisting of one lever and pawl only, is cam operated and enclosed. Section thickness is arranged in steps, 2·5 μ, 5 μ, 7·5 μ, 10 μ, 12·5 μ, and 15 μ. The adjustment is made by a knurled head on the front of the frame, and, if necessary, without stopping the machine. The finish of the frame of the instrument, knife holder, and object holder is of crystalline enamel, the other parts being chromium plated.

No. 3880. Automatic rotary microtome ... ...
No. 3881. Knife blade 13 cm. length, 3 cm. width ... ...
No. 3882. Back for No. 3881 ... ...
No. 3883. Handle for No. 3881 ... ...
No. 3885. Knife blade 8.5 cm length, 2 cm. width ... ...
No. 3884. Wood blocks ... ... per dozen



No. 3602.

No. 3602. Hand microtome, constructed of solid brass 1½ in. diameter with well ⅝ in. diameter. Though simple in design, being solidly made, considerable accuracy can be obtained. The raising screw has 40 threads to the inch ... ...

Fused Microscope Cells.

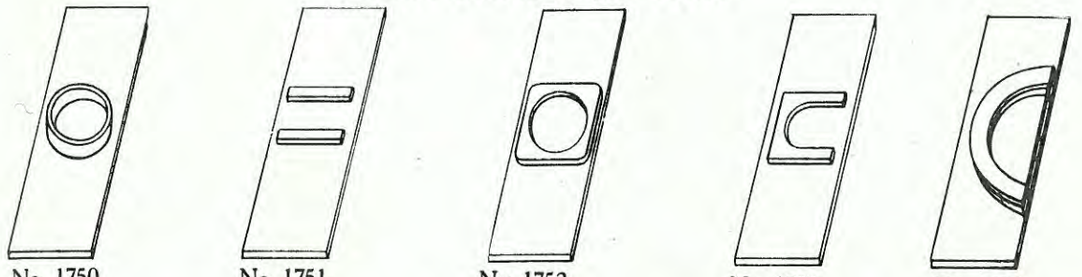

No 1750 No. 1751. No. 1752. No. 1753. No. 1754.

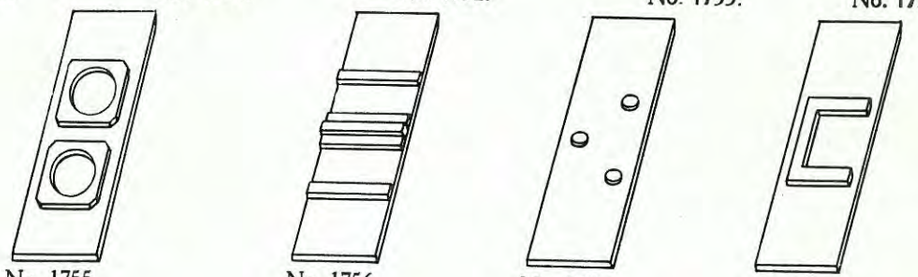

No. 1755. No. 1756. No. 1757. No. 1758.

No. 1750/8. Fused microscope cells ... ... each

This series of cells are invaluable for microscopic work. They can be used as moist chambers, hanging drop slides, comparison slides, separators and for containing pond life and other fluids. No cement is used in their manufacture the glasses being fused together. They will therefore withstand the action of normal heat and acids for sterilizing purposes. When ordering please specify by number the particular pattern required.

Turntable.

No. 3386. Turntable ... ...

The general design of this can be seen from the illustration. It has hand rests on both sides of the turntable giving it stability in use. The turntable rotates in a ball bearing fitting. An arm is fitted for steadying the brush.

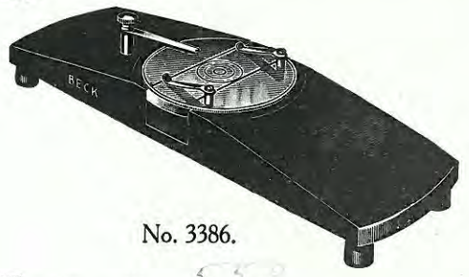

No. 3386.



No. 3418.

No. 3418. Diamond object marker ... ...

This fits into the microscope like an object glass and has a diamond set into it, so that a circle can be scribed upon the cover glass around any portion of the object which it is desired to mark. The diameter of the circle is adjustable in steps, of ·01 inch to ·1 inch.

No. 3404. Slide with silver film with fine pinholes under cover glasses of three thicknesses, ·006 in. (·15 m/m.), ·008 in.(·2m/m.) and ·01 in. (·25m/m.) ... ...

Object Cabinets.

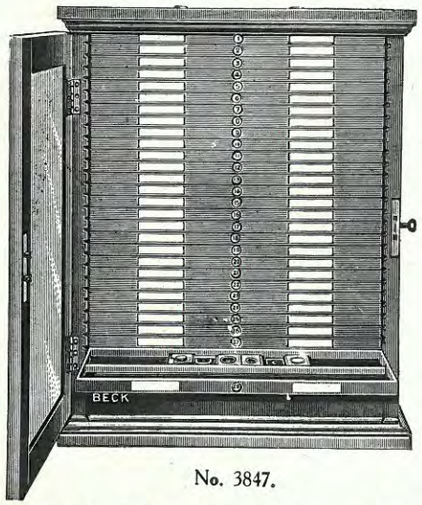

No. 3847.

These cabinets are well made in seasoned pine, oak or mahogany and are of excellent workmanship, special care being given to the fitting of the drawers. A glass panel is fitted into the door and lock and key are provided.

Capacity	No.	Pine	No.	Oak	No.	Mahogany
1000	3840		3843		3847	
2000	3841		3844		3848	
3000	3842		3845		3849	

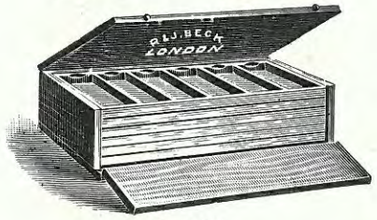

No. 3490

Cabinet of polished pine, with trays as illustrated

No. 3490. To hold 3 doz. ... ...
No. 3491. To hold 6 doz. ... ...
No. 3492. To hold 12 doz. ... ...



No. 636

Cabinet of rack type, well constructed throughout in wood, index provided in lid

No. 635. To hold 50 slides ... ...
No. 636. To hold 100 slides ... ...

Slides and Cover Glass.

Slides are supplied in boxes of $\frac{1}{2}$ gross and cover glass in boxes of $\frac{1}{2}$ oz. Cover glass is available in $\frac{3}{4}$ in. and $\frac{7}{8}$ in. squares and circles.

No. 3830. **Slides 3″×1″,** extra thin, half white ... ... per gross
No. 3831. **Ditto,** thin, half white ... ... per gross
No. 3832. **Ditto,** ordinary, half white ... ... per gross
No. 3390. **Cover glass,** No. 1, average thickness ·006, circular ... ... per oz.
No. 3391. **Ditto,** square ... ... per oz.
No. 3392. **Cover glass,** No. 2, average thickness ·008, circular ... ... per oz.
No. 3393. **Ditto,** square ... ... per oz.
No. 525. **Labels** for naming objects ... ... per 100

Dissecting Instruments.



3850 3863 3440 3860 3448

No. 3850. Scalpels, all metal handles, sizes of blades $1\frac{1}{4}$ in. and 2 in. ... ... each
No. 3856. Scissors, straight, $5\frac{1}{2}$ in. ... ... „
No. 3440. Scissors, straight, $4\frac{1}{2}$ in. ... ... „
No. 3439. Scissors, straight, 4 in., very fine points ... ... „
No. 3858. Forceps, straight, 5 in., blunt points ... ... „
No. 3860. Forceps, straight, $4\frac{1}{2}$ in. fine points and steady pin ... ... „
No. 3434. Needles, straight, in rosewood handles with ferrule ... ... „
No. 3862. Needles, triangular, in plain wooden handles ... ... „
No. 3863. Needles, with one cutting edge ... ... „
No. 3864. Needles, spear-headed ... ... „
No. 3431. Blow-pipe with stilette ... ... „
No. 3432. Razor, hollow-ground one side, flat other side ... ... „
No. 3448. Section lifter, in copper or aluminium ... ... „
No. 3442. Seeker, in rosewood handle... ... ... „
No. 3429. Glass pipette, straight ... ... „
No. 3430. Glass pipette, straight, with teat ... ... „

Set of Dissecting Instruments.

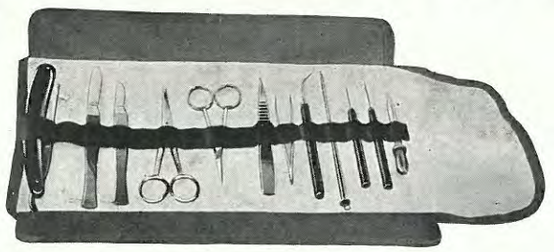

No. 3428A

No. 3428. Roll-up kit, containing two pairs of scissors, two scalpels, razor, two pairs of forceps, seeker, two needles and pipette with teat ... ...

No. 3428A. As No. 3428 but with addition of blow-pipe ... ...

Microscope Cover.

No. 3796. Cover in cellophane for the protection of the microscope from dust, made in suitable size for use with instruments of the usual height. ... ...

INDEX

Abbe camera lucida 59
Abbe condensers 52
Achromatic condensers 52
„ magnifiers, dissecting 42
„ object glasses 44, 45
Aluminium surfaced mirror 52
Angular eyepiece 49
Aplanatic condensers 52
Apochromatic object glasses 44, 45
Arm, dissecting 42

Bench microscope 29, 40
Binocular eyepiece 50
„ high-power microscopes 24–28

Cabinets, object 72
Camera lucida 59
„ macroscopic 61, 62
„ photomicrographic 60–63
Cells, microscope, fused 71
Changer, objective 58
Cobweb eyepiece micrometer 49
Colour screens 66
Comparator eyepiece 49
Comparison microscope 38, 39
Compensating eyepieces 48
Condenser, quartz substage 52
Condensers substage 44, 52
Cornex dissecting microscope 42
Cover glass 72
„ microscope 73
Crescent dissecting microscope 43

Dark ground illuminators 51
Demonstration eyepiece 48
Diaphragm, pinhole 51
Dissecting arm 42
„ instruments 73
„ magnifiers 42
„ microscope Cornex 42
„ „ Crescent 43
Double nosepiece 58
Drawing prism 59
„ table 59

Eyepiece cameras 60
„ micrometers 41
Eyepieces 48–50
„ angular 49
„ binocular 50
„ comparator 49
„ compensating 48
„ demonstration 48
„ goniometer 49
„ micrometer 48, 49
„ projection 48
„ wide field 48

Filter, ultra-violet 52, 66
Filters, colour 66
Fluorescence condenser 52
Fluorite object glass 44, 45
Forceps, stage 68
Fused microscope cells 71

Glass slides 72
Globe and circle graticule 41
Goniometer eyepiece 49
Grinding and polishing machine 69

Hand microtome 70
High power binocular eyepiece 50
„ „ „ microscopes 24–28

Illuminators, Beck-Chapman, opaque 56
„ dark ground 51
„ prism 59
„ substage 53
„ thin glass 59
„ vertical 57, 59
„ Wrighton-Beck metallurgical 57

Labels 72
Laboratory metallurgical microscope 30–33
Lamps 64–66
Levelling device 69
Light filters 66
London microscope, No. 10 ... ... 4, 5
„ „ No. 15 ... ... 6, 7
„ „ No. 47 8–23
„ „ No. 48 24–28

INDEX (continued)

Macroscopic camera 61, 62
Magnifiers, dissecting 42
Marker, object 71
Mechanical stages 67
Micrometer eyepieces 48, 49
„ microscope 41
Micrometers, eyepiece 41
„ stage 41
Microscope, bench 29, 40
„ comparison 38, 39
„ cover 73
„ Cornex dissecting 42
„ Crescent „ 43
„ Laboratory metallurgical 30–33
„ London No. 10 ... ... 4, 5
„ „ No. 15 ... ... 6, 7
„ „ No. 47 8–23
„ „ No. 48 24–28
„ micrometer 41
„ phase contrast 55
„ process 40
„ reflecting 34, 35
„ stress measurement 40
„ Universal No. 50 ... ... 36, 37
Microstigmar lenses 62
Microtomes 70
Mirror, aluminium surfaced 52

Newton objective... 47
Nosepiece, double, triple and quadruple 58

Object cabinets 72
„ glasses 44–47
„ marker 71
Objective changer 58
Objectives, reflecting 46
Opaque illuminator 56

Patch stops 52
Phase contrast apparatus 54, 55
Photomicrographic cameras 60–63
Pinhole diaphragm 51
Polarising apparatus 52, 59
Polishing machine 69
Prism, drawing 59
Process microscope 40
Projection eyepieces 48

Quadruple nosepiece 58
Quartz, condenser, substage 52

Reflecting microscope 34, 35
„ objectives 46
Rotary microtome 70
Rotating stages 67, 68

Screens, colour 66
Silver film slide 71
Slides, glass 72
Stage forceps 68
„ micrometers 41
„ warm 68
Stages, mechanical 67
„ revolving 67, 68
Stops, patch 52
Stress measurement microscope 40
Substage condensers 44, 52
„ illuminator 53
Substages 10
Super stage revolving 68

Table, drawing 59
Topley top stage 11, 19
Triple nosepiece 58
Trough, glass 71
Turntable 71

Ultra violet filter 52, 66
Universal microscope 36, 37

Vertical illuminator 57, 59

Warm stage 68
Wrighton-Beck vertical illuminator 57

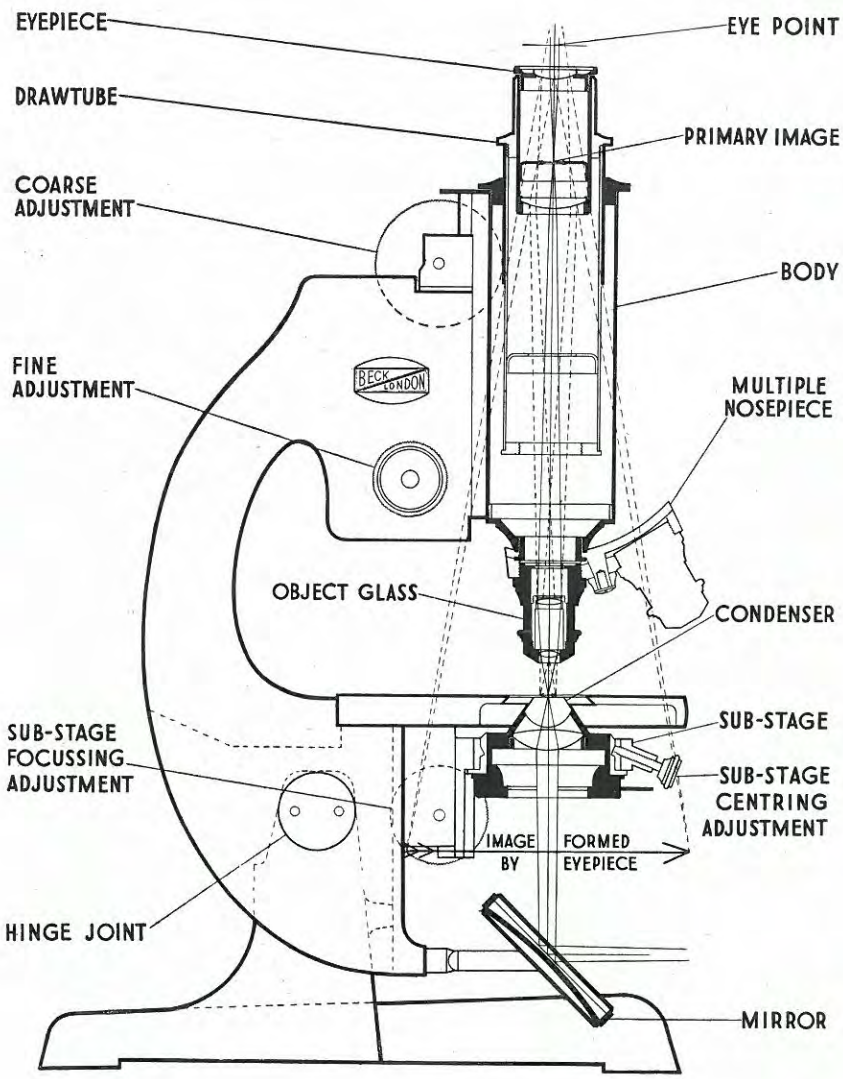

DIAGRAMMATIC DETAILS OF THE BECK MICROSCOPE

The above is a facsimile of a wall-chart, mounted on board, size 32″ x 22″, which we have just published. It is in 3 colours and shows a sectional view of a microscope with a trace of rays through the instrument. We shall be pleased to send one or more copies of this, carriage free, to any institution to whom it would be of service.