MEASURING MICROSCOPES AND ACCESSORIES

1962

Section D

Our catalogue is, for ease of reference, issued in sections, covering the following categories :

Section	Colour	Title
A	Maroon	Biological Microscopes
B	Dark Blue	Metallurgical Microscopes and Accessories
D	Light Green	Measuring Microscopes and Accessories
E	Orange	Microscope Accessories and Illuminants
F	Dark Green	Photomicrographic and Projection Apparatus
G	Light Blue	Magnifiers and Microbiological Accessories
H	Lilac	Optomax Research Microscope
J	Purple	Stereoscopic Microscopes
K	Maroon	Diamax Laboratory Microscope
M	Red	Grinding and Polishing Machine
S	Brown	Spectroscopes
T	Grey	Optical Units and Benches

In addition, the following catalogues describe specialised items of our manufacturing programme :

Multimax Stereoscopic Microscope
Lomag Surgical Stereoscope
Reflecting Objectives
Vertiphase Unit for Metallurgical Microscopes
Dobson Ozone Spectrophotometer

We shall be pleased to furnish copies of any of the above publications on request.

R. & J. BECK LIMITED

BUSHEY MILL LANE, WATFORD, HERTS., ENGLAND

Telephone: WATFORD 42261

Telegrams: "OBJECTIVE" WATFORD

Northern Sales Office : *Telephone : Wythenshawe 5221*

LEDSON ROAD, WYTHENSHAWE, MANCHESTER, 23

Section D

MEASURING MICROSCOPES AND ACCESSORIES

Introduction

The non-contact measurement of small dimensions has grown considerably in importance as objects have become smaller and more delicate. This is particularly true in the industrial field, where manufactured parts have recently shown great reductions in size. Tolerance on dimensions and clearances in assemblies becomes increasingly more stringent in these small units and control equipment of ever-increasing accuracy is required to maintain the necessary high standard of manufacture.

Optical measurement is one approach to this problem and is convenient, since a visual presentation of the test piece is readily interpreted by unskilled, as well as skilled, operators. Two basic methods are employed, one measuring the object size directly and the other measuring the size of an image related by a known magnification factor to the original object.

In the first method, when measurements are taken of the object, the range which can be covered is limited only by the size of the moving carriage, which brings two successive reference points into the image field and measures the translation required. The range can, therefore, be relatively large, but the accuracy is restricted to normal engineering limits. In this type of instrument the optical system serves merely as a means of visually enlarging the reference and datum points, so that exact coincidence can be ensured.

In the second method, when measuring the image size, an optical " lever " increases the accuracy considerably. This increase is dependent upon the magnification and is achieved at the expense of the size of the object which can be measured. Both extremes of the dimension to be checked must be visible simultaneously in the same field of view, which also contains a calibrated measuring scale reading the object size directly.

The microscope tubes utilised on the various instruments described in the following pages are standard items, which will accept any objectives and eyepieces from our standard range described in section E of this catalogue. Some guidance in the selection of appropriate optics is given on page D—11, where some of the many standard measuring scales are described. Special graticules, useful, for example, in checking special profiles, can always be made and we shall be pleased to quote for these.

The equipment described on the following pages has been developed to answer a wide range of measurement problems and the experience gained in the design and manufacture of these standard items is available to advise on special requirements, which we shall be pleased to discuss at any time.

One Metre Research Cathetometer

Specification

Range of measurement	1 metre
Minimum centre line of telescope to base	48 cms.
Overall height	1.7 metres
Overall weight	130 Kgs. (280 lbs.)
Scale	1,000 mms.—numbered every 10 mms.
Vernier	100 divisions—accuracy .01 mms.
Micrometer thimble	25 mms.—.005 mm. divisions
Telescope—	
Focusing range	Infinity to 50 cms.
Supplementary lens 1	50 cms. to 22½ cms.
Supplementary lens 2	22½ cms. to 14½ cms.
Field of view	2¼° at infinity
Bubble accuracy—pillar	5 secs. of arc
Bubble accuracy—telescope	½ sec. of arc

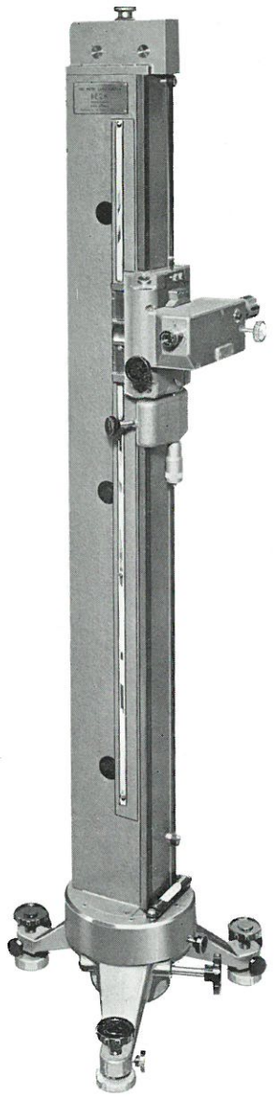

The cathetometer is a rigidly constructed research instrument consisting basically of three main units. These are, the base ; the vertical column and the telescope. The essential parts are manufactured from high grade cast iron and are finished in durable hammer enamel. A carriage mounted on steel roller bearings carries the telescope along the vertical slide and movement is facilitated by a counter balance weight inside the column. The carriage can be clamped in any position along the column and a slow motion translation in the form of a micrometer drum enables the telescope to be set accurately on to the target.

The telescope has a focusing adjustment to cover object distances between infinity and 50 cms. and an overall magnification of approximately ×35. The optical system of the telescope is arranged so that an erect image is seen in the same field as the special wide crossline which serves as the basic datum line. A sensitive bubble level is housed within the telescope casting and a unique feature of this cathetometer is that the setting of the bubble can be made without

One Metre Research Cathetometer (continued)

removing the eye from the telescope eyepiece. The images of the bubble ends can always be seen in the left-hand side of the telescope field, so that the exact setting of the bubble and the object can be confirmed at the same time. The telescope levelling is by means of a tangent screw, which may be tilted to 15° on either side of the horizontal, which position can be achieved to an accuracy of better than .5 sec. of arc.

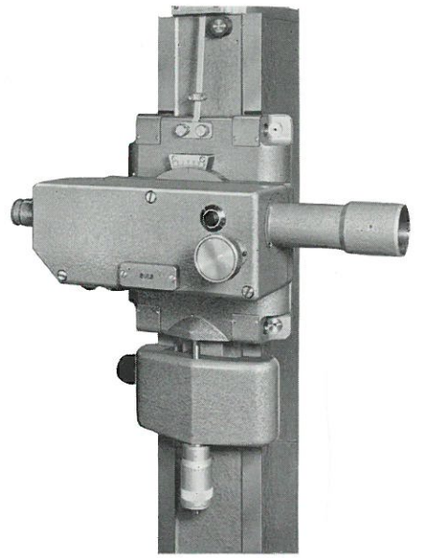

The metre scale is fitted to the column so that temperature variations do not impose any stresses on it and do not affect its length. It is divided into centimetres and sub-divided into millimetres and an associated vernier will enable readings to be made direct to .01 mms. A reading magnifier and illuminator, which slide along the vernier, facilitate the reading. The column, which is supported by a large thrust race of the taper, roller type may be rotated through 360° and locked. A fine adjustment may then be brought into use, whereby sensitive rotation is obtained by means of a tangent screw positioned in the base.

Two 10 sec. spirit levels are fixed to the upper face of the base ; permitting the column to be set exactly vertical by adjustment to the three levelling screws in the toes.

The remote measurement of vertical displacements occurs in many fields of investigation and the cathetometer can be used for this purpose even if the points to be measured are completely inaccessible. Such problems occur in the checking of liquid levels in the manometers of pilot production plants, and in the assessment of movement in extensometer and creep testing. The potential accuracy of this research instrument is as high as .005 mms. at distances of 5 metres, if the displacement to be measured does not exceed 25 mms. For displacements in excess of this and up to the full range of 1 metre, the accuracy at 5 metres may be as good as .03 mms.

By the addition of auxiliary lenses, objects very much closer to the cathetometer may be measured since the telescope may then be focused at any point between infinity and 15 cms.

No. 1000 One metre cathetometer ... ...

No. 1010 Pair of supplementary lenses for use at short viewing distances ... ... per pair

Micrometer Microscope

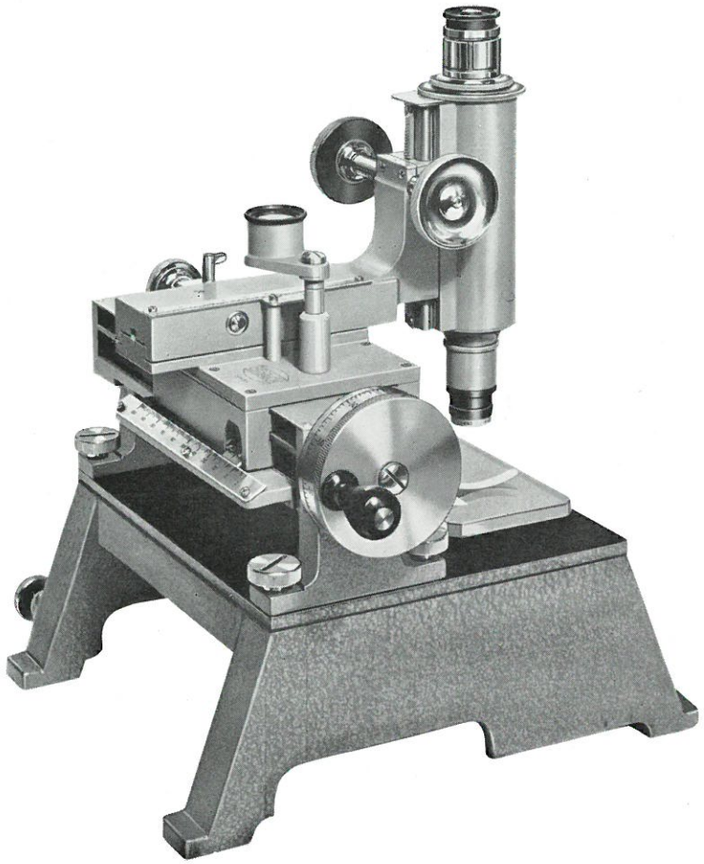

The most accurate method for measuring objects of intermediate size is by means of a travelling microscope, moved by a micrometer screw along an accurate carriage. The two extremities of the object are brought consecutively into coincidence with the eyepiece crossline and the amount of travel is read on the scales and divided drum.

Section D

MEASURING MICROSCOPES AND ACCESSORIES

Micrometer Microscope (continued)

An essential feature of this type of instrument is its great rigidity and in the design and construction of this microscope great care has been taken to ensure that its versatility in no way impairs the accuracy of the readings. The complete carriage and microscope assembly can be reversed on the base casting, so that the microscope overhangs, in which position it can be used to measure objects directly on the bench. Three auxiliary feet are provided at one end of the instrument, so that readings may be achieved with the main carriage vertical.

The optics, which can be fitted to this microscope, should be selected to suit the work being undertaken, but for general purposes, a total magnification of ×100 will be quite adequate and the basic instruments, as listed, are therefore provided with a ×10 objective and a ×10 crossline eyepiece. For measurements of opaque materials an integral light source is desirable, which, when interpolated between the bottom of the microscope tube and the objective, illuminates the field being viewed. Being integral with the microscope tube, permanent alignment with the axis is maintained.

Two forms of the microscope are made in which the main micrometer thread (range 100 mms.) and drum are calibrated alternatively in inches or millimetres. In the metric form of the instrument each division of the micrometer drum represents .002 mms., while in the English form, each division is .0001 ins. Cross traverse by rack and pinion, perpendicular to the main carriage, provides a movement of 75 mms., and this can be fitted with a vernier scale to read to either .1 mms. or .002 ins.

When erected so that the measuring carriage is vertical, the microscope can easily be converted to a cathetometer having a range of 100 mms., by the use of a telescope objective, in place of the standard ×10 objective recommended above. The microscope drawtube may then be adjusted to focus on points between infinity and 20 ins. from the instrument.

No. 3187	Micrometer microscope, metric reading, with ×10 objective and crossline eyepiece, in case	Discontinued
No. 3187A	As No. 3187, but with verniers and reading magnifier to traverse slide, in case	
No. 3189	Micrometer microscope, English reading, with ×10 objective and crossline eyepiece, in case	Discontinued
No. 3189A	As No. 3189, but with verniers and reading magnifier to traverse slide, in case	
No. 3188	Telescope objective to fit microscope nosepiece ...	
No. 1194	Integral vertical illuminator, 6v. 15 watt	
No. 2160	Transformer, 6v. 15 watt, with rheostat	
No. 6162	Spare lamp, 6v. 15 watt ... ... each	

Micrometric Microscope



This microscope enables accurate measurements to be made in three dimensions, the length and breadth having a range of 25 mms., while depths of 2.5 mms. can be accommodated. The instrument is based on the conventional model No. 47 stand and standard substage and other equipment may be attached as required.

The measurement of depth is made by means of a specially calibrated fine adjustment milled head, the microscope being focused in turn on the upper and lower planes of the object. The readings are made on the graduated drum by which the adjustment is operated, both English and metric calibrations being available. Each division of the drum on the English version represents .0001 ins. and on the metric model .002 mms. In order to minimise inaccuracies arising from the depth of focus of the microscope objective, an objective having a numerical aperture of at least 0.25 is required.

Section D

MEASURING MICROSCOPES AND ACCESSORIES

Micrometric Microscope (continued)

Length and breadth are measured by moving the object transversely beneath the microscope objective and a crossline is fitted to the eyepiece to act as a datum point. Movement is actuated by standard engineering micrometers, alternative versions of which can be fitted to provide either English or metric readings to varying degrees of accuracy. All thimbles are direct reading and in the English series each division can represent .001 ins., .0002 ins. or .0001 ins. As listed below, and supplied as standard, the instrument is equipped with thimbles reading to .001 ins. The instrument with metric calibrations also reads direct on the micrometer thimble, alternative forms of which have divisions representing .01 mms., .005 mms. or .002 mms. The standard instrument is supplied with the thimbles reading to .01 mms., but for this and the English range above, we shall be pleased to quote for the larger, more accurate thimbles on request.

The stage utilised for supporting the object has a plain top surface 80 mms. square, to which can be fitted either the Topley stage (as illustrated) for the location of standard microscope slides, or suitable holders for objects of other sizes.

Beneath the stage, the microscope is fitted with a standard mirror and the limb is drilled to receive a rack and pinion focusing substage bracket, which may either be supplied with the instrument in the first instance, or at any later date as the requirement arises. All the substage equipment described in section E of this catalogue may be attached to this bracket. A variety of illumination techniques for transparent objects can therefore be achieved, the instrument behaving optically in exactly the same way as the standard model No. 47.

Incident illuminators for the illumination of opaque objects can be interpolated between the objective and the microscope nosepiece, a shortened bodytube being fitted to ensure that the standard tubelength is maintained and that ample focusing movement on the rack and pinion slide is available. When no incident illuminator is supplied, an extension tube of equivalent length is incorporated. Suitable light and dark field integral illuminators are described in section B of the catalogue devoted to metallurgical microscopes.

The objective, eyepiece and condenser fittings are all of standard dimensions and thus any optics from the range described in section E of the catalogue may be fitted to suit the work in hand.

No. 3523A	Micrometric microscope, metric reading, in case ...
No. 3523B	Micrometric microscope, English reading, in case ...
No. 2278	Rack and pinion focusing substage unit ... ...
No. 3750	Topley stage ... ...
No. 3264B	Eyepiece, ×10, with crosslines ... ...

Bench Microscope



This instrument, of general utility for laboratory and industrial purposes, is suitable for the examination of an unmounted object under moderate magnification. The standard microscope body utilised will accept any of the objectives and eyepieces described in section E of this catalogue and by the incorporation of a measuring scale, the instrument can be used for the assessment of dimensions in the object being examined.

No. 3195A Bench microscope, with two objectives and one eyepiece giving ×25 and ×65 ... ...

No. 3195M Bench microscope, with objective and eyepiece giving ×100 and eyepiece scale with 100 divisions of .02 mms. each ... ...

No. 3224 Case for Bench microscope ... ...

Process Microscope

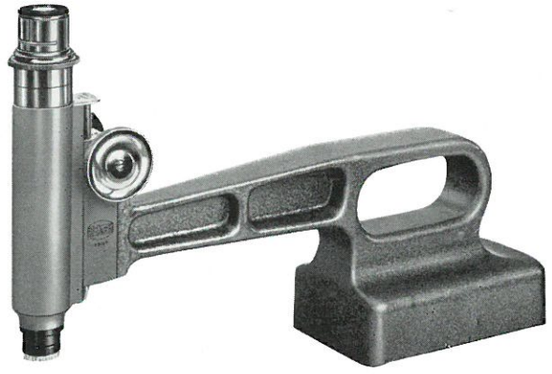

This instrument has the same features as the Bench microscope described above, but has been designed to have an overhang of 7 ins. between the base and the optical axis. It was originally intended for the examination of half-tone plates in the printing industry, but has since found many other applications. The standard microscope body-tube, actuated by rack and pinion, will accept any of our range of objectives and eyepieces and the extending drawtube enables the magnification to be varied, so that an eyepiece scale can be accurately calibrated for size.

No. 3186 Process microscope, with objective and eyepiece giving ×60 ... ...

No. 3186A As No. 3186, but with crosslines in eyepiece ... ...

No. 3186B As No. 3186, but with 100 division micrometer scale in eyepiece ... ...

No. 2303 Case for Process microscope ... ...

Stress Measurement Microscope

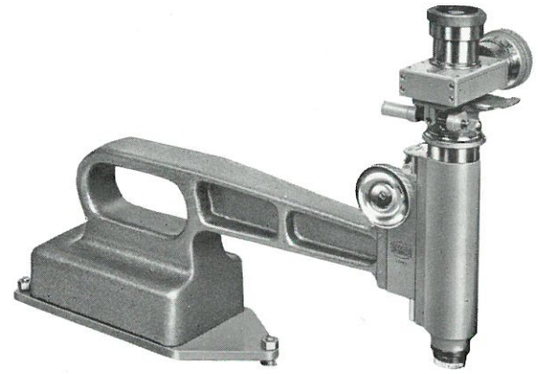

This instrument is a special version of the Process microscope, being fitted with optics for the examination and measurement of displacements in plastic models subjected to stress. The technique is described in Professor A. J. S. Pippard's book, "The Experimental Study of Structures," published by Arnold. The filar micrometer eyepiece reads to .002 mms. per drum division and is equipped with rotating movement of ± 10° from the normal position.

The rotation is actuated by a tangent screw and a scale and vernier to determine the angular movement may be supplied if required.

The Deformeter described below is recommended for use in conjunction with this microscope.

No. 2294 Stress measurement microscope ... ...

No. 2296 Scale and vernier to rotating motion ... ... extra

No. 2295 Case for Stress measurement microscope ... ...

Deformeter



The apparatus consists of a rigid beam which is fixed to a baseboard. A second beam is coupled to the principal member and the specimen to be tested is bolted to both. The two beams may be moved relatively to one another by the insertion of accurately ground eccentric plugs which impart a relative angular movement of either 1/50th or 1/100th radians between the two members.

The many interesting experiments on model structures, which can be accomplished with this apparatus, are fully described in the book mentioned above. The apparatus as supplied consists of a range of plugs with the necessary keys, spare springs and a screw driver. A complete outfit is shown in the illustration.

No. 2297 Deformeter, complete with accessories, in fitted case ...

Microscope Units



For many measurement problems a simple microscope tube fitted with fixed optics, to give a definite magnification, is useful when a graticule is incorporated to provide direct reading of the object size. Three such tubes are offered and these will accept any of the standard objectives and eyepieces described in section E of the catalogue. Specifications of suitable graticules will be found on page D—11 and also in section E.

No. 2307 microscope unit is a simple tube, threaded at the lower end to accept a microscope objective and bored at the upper end to receive an eyepiece. The separation between the objective and the eyepiece can be altered by withdrawing the upper portion of the tube and hence the magnification may be adjusted to an appropriate value, at which point the tubes may be fixed so that direct readings can always be made.

No. 2308 microscope unit has a similar tube system, but in this case its versatility is increased by the addition of a rack and pinion focusing mechanism actuated by milled heads. The range of movement provided exceeds 4 ins. and hence objects in different planes may easily be brought into focus.

No. 2309 microscope unit is, in turn, identical to the No. 2308 described in the previous paragraph, but the fixed member of the focusing mechanism is designed for attachment by means of a lug.

No. 2307 Microscope unit, without optics ... ...

No. 2308 Microscope unit with rack and pinion focusing motion, without optics ... ...

No. 2309 Microscope unit, as No. 2308, but with attachment lug, without optics ... ...

Eyepiece Graticules and Scales

The wide range of eyepiece scales offered enables a large variety of different measurement problems to be undertaken. The scales are photo-engraved on glass plates 21 mms. diameter and fit adjacent to the field stop of most eyepieces. To determine the scale most suitable for direct measurement of object size, it should be remembered that the scale divisions are arbitrary until related to a known objective magnification. For this reason, the selection of a Ramsden, positive, eyepiece is recommended, since no further correction factor is then introduced. As an example, the insertion of a No. 3810 10 mm. scale into a positive eyepiece, when used in conjunction with a ×5 objective will enable, by slight adjustment of the microscope tubelength, readings of the object size to be made directly, each scale division representing .02 mms.

In addition to the standard scales listed below, profile checking or angular setting of small components can be greatly simplified by an appropriate graticule and we shall be pleased to consider the manufacture of any special pattern to suit specific requirements.

The standard stage micrometers, which are of great assistance in achieving the initial calibration of an eyepiece scale, are also listed below.

No. 3265 Eyepiece crossline plate ... ...

No. 3810 Eyepiece micrometer, 10 mm. scale divided into 100 parts ... ...

No. 3811 Eyepiece micrometer, as No. 3810 with crosslines ...

No. 3812 Eyepiece micrometer, step pattern as No. 3810 ...

No. 3276 Eyepiece micrometer, 5 mm. scale divided into 50 parts ... ...

No. 3279A Eyepiece scale, ruled in squares of $\frac{1}{4}$ mm. side ...

No. 3279B Eyepiece scale, ruled in squares of $\frac{1}{2}$ mm. side ...

No. 3279C Eyepiece scale, ruled in squares of 1 mm. side ...

No. 3794 Eyepiece scale, protractor scale, 180° ... ...

No. 3795 Eyepiece scale, 10 numbered, concentric, circles ...

No. 3808 Eyepiece scale, Patterson type for particle sizing ...

No. 3809 Eyepiece scale, M.R.E. type for particle sizing ...

No. 3277 Stage micrometer, transparent, 10 divs. each .1 mm. and .01 mm. ... ...

No. 3278 Stage micrometer, transparent, 10 divs. each .01 in. and .001 in. ... ...

No. 3807 Stage micrometer, opaque, 10 divs. each .1 mm. and .01 mm. ... ...

No. 3806 Stage micrometer, opaque, 10 divs. each .01 in. and .001 in. ... ...

Filar Micrometer Eyepiece



This accessory unit is used for the accurate measurement of the image by means of a reference line which traverses the field of view when the micrometer thimble is actuated. The total travel is 15 mm., the micrometer thread has a pitch of 1 mm., and the thimble is divided into 100 divisions. The unit, therefore, reads to an accuracy of .01 mm. at the image. By calibration of the objective magnification using an object of known size, measurements can be made very precisely, the figures quoted being divided by the objective magnification in order to obtain the sizes of the object. A second fixed scale is also visible in the field of view and provides a central datum line and index lines corresponding to each complete revolution of the micrometer thimble.

A Ramsden eyepiece, ×10, is mounted in a screw focusing tube above the micrometer assembly and a clamp screw is provided to ensure a rigid coupling to the eyepiece tube of the microscope.

No. 3276A Filar micrometer eyepiece, in case ... ...

Goniometer Eyepiece



The Goniometer eyepiece is used for the angular measurement of objects and consists of a fixed block in which the eyepiece rotates. A full protractor scale, 2.5 inches diameter, reading by means of a vernier to 10 minutes, enables readings of angles in the object to be obtained by the difference of two settings. Fitted to the rotating portion is a special Huygenian eyepiece, ×10, containing a very accurately centred crossline graticule, one of the diametrical lines of which is used to set the rotational position relative to the object.

The unit fits over the standard eyepiece tube of 1.05 inches diameter and is fixed in position by means of a screw clamp. It can be adapted for microscopes with drawtubes of smaller external diameter at a small extra cost. This dimension should be provided when ordering.

No. 3258 Goniometer eyepiece, in case ... ...

Section D

MEASURING MICROSCOPES AND ACCESSORIES

BUSINESS TERMS

1. All prices are strictly nett for cash.
2. Payment should be made by cash with order where no account has been opened in our ledgers. Where it is desired that a ledger account be opened, London reference should accompany order to prevent delay.
3. All goods and experimental models made to order must be paid for half in advance and half on delivery. We take no responsibility for the performance of experimental models.
4. Prices are subject to alteration on account of fluctuation in cost of labour and materials.
5. A charge is made for packing cases, which, when returned empty, carriage paid and in good condition, will be credited at invoiced price.
6. Delivery is free in the London district. Elsewhere in the United Kingdom, goods are sent carriage paid and the cost of carriage charged on the invoice, except in cases where delivery is included in the contract price.
7. We do not hold ourselves in any way responsible for damage to goods in transit, although every care is expended in the packing. Our risk terminates on the goods leaving our warehouse. We can insure goods at customer's expense if instructed to do so.
8. We cannot consider complaints as to the execution of any order unless lodged within seven days of the receipt of the goods.
9. Code. In cabling or telegraphing orders it is only necessary to quote catalogue number.

As constant improvements are incorporated in our instruments the illustrations and descriptions in this catalogue may not be up to date in every detail.

Regular servicing maintains the efficiency and prolongs the life of an instrument. We shall be pleased to furnish details of our servicing facilities.

This catalogue cancels previous lists

Pubn. No. C 257 12.62

F. & F. Ltd.