METALLURGICAL MICROSCOPES AND ACCESSORIES

1962

Section B

METALLURGICAL MICROSCOPES AND ACCESSORIES

Our catalogue is, for ease of reference, issued in sections, covering the following categories :

Section	Colour	Title
A	Maroon	Biological Microscopes
B	Dark Blue	Metallurgical Microscopes and Accessories
D	Light Green	Measuring Microscopes and Accessories
E	Orange	Microscope Accessories and Illuminants
F	Dark Green	Photomicrographic and Projection Apparatus
G	Light Blue	Magnifiers and Microbiological Accessories
H	Lilac	Optomax Research Microscope
J	Purple	Stereoscopic Microscopes
K	Maroon	Diamax Laboratory Microscope
M	Red	Grinding and Polishing Machine
S	Brown	Spectroscopes
T	Grey	Optical Units and Benches

In addition, the following catalogues describe specialised items of our manufacturing programme :

Multimax Stereoscopic Microscope
Lomag Surgical Stereoscope
Reflecting Objectives
Vertiphase Unit for Metallurgical Microscopes
Dobson Ozone Spectrophotometer

We shall be pleased to furnish copies of any of the above publications on request.

R. & J. BECK LIMITED

BUSHEY MILL LANE, WATFORD, HERTS., ENGLAND

Telephone: WATFORD 42261

Telegrams: "OBJECTIVE" WATFORD

Northern Sales Office : *Telephone : Wythenshawe 5221*

LEDSON ROAD, WYTHENSHAWE, MANCHESTER, 23

Section B

METALLURGICAL MICROSCOPES AND ACCESSORIES

Student Metallurgical Microscope

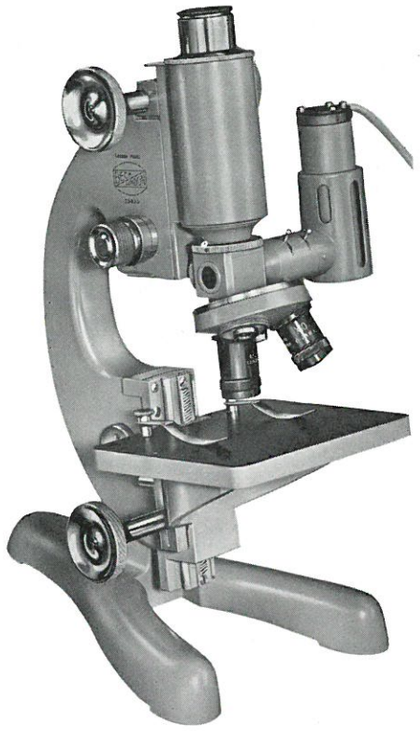

The Student metallurgical microscope has been developed primarily to fulfil the requirements of technical colleges and schools, but it is also a satisfactory instrument for use in metallurgical laboratories where an advanced instrument is not essential. The main focusing adjustments are effected by milled heads on both sides of the limb, the coarse movement being by rack and pinion and the fine having independent left and right-hand controls, the left-hand knob being calibrated to .005 mm. The bodytube has a fixed tubelength of 160 mm., including the integral illuminator and the objective nosepiece.

An independent rack and pinion focusing adjustment, having a travel of 1½ in., is fitted to the stage and provides ample working space for thick specimens. The solid stageplate, measuring 4½ in. × 4 in., is provided with spring clips to secure the specimen.

The integral illuminator, fitted as standard to this microscope, is described in greater detail on page B—6. Alternative illuminators can be fitted, full details of which are given on later pages of this pamphlet.

The objectives available for use with this instrument are taken from the standard achromatic series and are specially corrected for metallurgical use. They are also anti-reflection coated to eliminate internal reflections and to provide maximum resolution images with no loss of definition due to stray light. The objectives may be adapted to the microscope by either a rotating nosepiece or by means of the centring objective changers which can be individually adjusted for each objective.

The microscope stand and fittings conform in every possible respect to the appropriate international standard dimensions and further accessories may, therefore, be accommodated as required. Details of these will be found in the appropriate sections of the general catalogue.

No. 3227 Student metallurgical microscope, stand only, in cabinet ...
No. 1194 Integral incident illuminator ... ...
No. 2160 Transformer, 6 v. 15 watt with rheostat ... ...
No. 6162 Spare lamps, 6 v. 15 watt ... ... each

To the above items must be added objectives, eyepieces and a nosepiece selected from the details given on page B—5.

Laboratory Metallurgical Microscope

This microscope is designed for metallurgical work either with prepared specimens mounted on slides or for large unmounted objects. The instrument is very solidly constructed to ensure the greatest rigidity, an essential feature for the more advanced types of observation such as photomicrography. The instrument is considerably more versatile than the student microscope described on the previous page, having facilities for illumination of transparent objects, as well as the possibility of selecting alternative bodytubes and stages.

Focusing controls which operate the microscope tube are accessible from both sides of the limb, the coarse adjustment by means of a rack and pinion and the fine adjustment by means of a double speed lever system, the left-hand knob being calibrated to .005 mm. Alternative monocular or binocular bodies are available, the monocular version having an adjustable drawtube. The special design of the No. 3228B enables the binocular head to be exchanged with a monocular tube. An inclining unit, as illustrated on the opposite page, can also be interpolated to provide for a more comfortable viewing position. Where long periods of observation are envisaged the binocular body should be selected in view of the greater comfort in use and relief from eye strain which it affords.



No. 3228 Microscope with No. 2340 Dark-field Illuminator

The stage bracket is carried on the wide dovetailed slide which has rack and pinion control for vertical displacement of the stage. This movement is actuated by milled heads and has a maximum travel in excess of 3½ in. This range is somewhat restricted if substage apparatus for the illumination of transparent objects is incorporated, but it is quite possible to accommodate specimens having a thickness of more than 5 in., if required. The standard stage supplied with the microscope has mechanical adjustments for the lateral displacement of the specimen, the entire top plate of the stage having a travel of 1½ in. × 1 in. For special requirements any of the stages described in section E of the microscope catalogue can be fitted in place of the standard stage.

Several alternative illuminators are available, the No. 1194, described on page B—6 being the most popular. For use with an external source of light the simple No. 4960 or the very versatile No. 2013 Vertiphase illuminator can be adopted, while for dark-field incident lighting, the No. 2340 should be selected.

Laboratory Metallurgical Microscope (continued)

Details of these illuminators will be found on pages B—7 and B—8.

Although this microscope is designed essentially for the examination of opaque specimens, facilities are provided for the illumination of transparent objects, the substage mirror is always fitted and the stage bracket is supplied with drilled holes for the reception of a substage unit, No. 2278, which will accommodate the standard range of condensers and apparatus normally associated with a biological microscope. This considerable versatility therefore makes the microscope particularly suitable for those laboratories which require to examine both transparent and opaque objects. The standard range of objectives and eyepieces for this instrument are listed on page B—5, where details are also given of the alternative nosepieces. The objectives, specially corrected for metallurgical work, are based on our standard achromatic series, but metallurgical versions of the apochromatic and aplanar objectives described in section E are also available and we shall be glad to quote for a suitable range of optics to meet individual requirements.

The microscope is quite suitable for use in conjunction with any of the photomicrographic accessories described in section F.

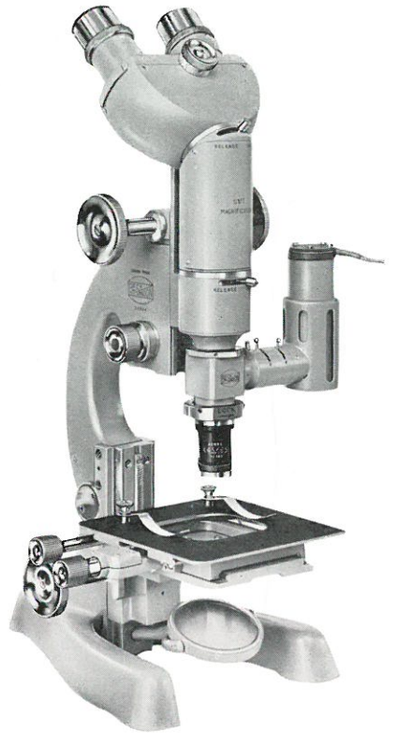

No. 3228B Inclined Binocular Microscope with No. 1194 Light-field Illuminator

No. 3228	Monocular metallurgical microscope, stand only in cabinet	
No. 3228B	Binocular metallurgical microscope, stand only in cabinet	
No. 1344	Interchangeable monocular body for No. 3228B ...	
No. 1345	Inclining unit for No. 3228B	
No. 3752	Verniers to stage traverse movements (.1 mm.) ...	
No. 2278	Rack and pinion focusing and centring substage ...	
No. 1194	Integral incident illuminator	
No. 2160	Transformer 6 v. 15 watt, with rheostat	
No. 6162	Spare lamps 6 v. 15 watt	each

For a complete outfit, objectives, eyepieces and an objective nosepiece must be selected from the items listed on page B—5 in addition to the microscope and accessories detailed above.

Further details of objectives, eyepieces, polarising accessories, substage equipment and alternative stages are given in section E.

Bench Metallurgical Microscope

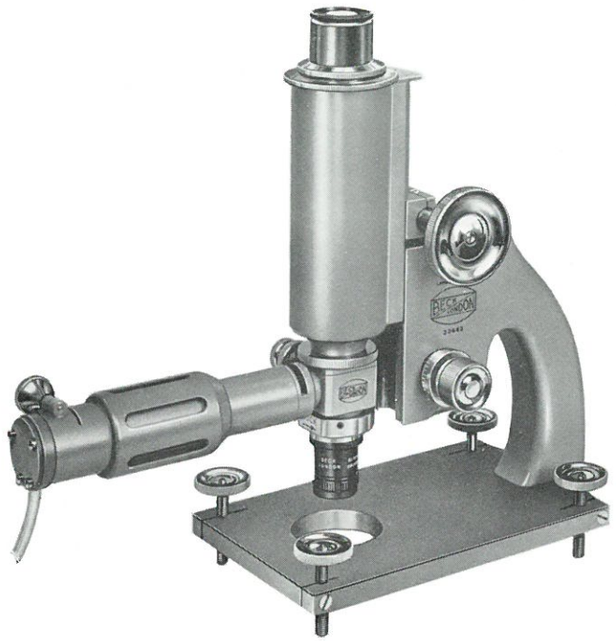

The Bench metallurgical microscope is suitable for use in the workshop where specimens of widely differing sizes may require to be examined. In addition to the normal facility for placing the object on the stage platform, very large surfaces may be examined by placing the complete instrument in the required position and focusing directly through the hole in the stage. The special vertical illuminator supplied with the microscope utilises a thin glass reflector and a 6 v. 15 watt prefocus lamp, but does not have integral iris diaphragms for control of the illumination which are a feature of the more advanced No. 1194. The limb of the microscope has conventional coarse and fine focusing adjustments which actuate the bodytube by means of a rack and pinion for the coarse motion and a calibrated lever system for the fine. An adjustable drawtube is provided so that the objective magnification can be adjusted to a definite value, when a graticule is used for measuring purposes. Levelling screws form the feet on which the instrument stands, enabling it to be levelled on irregular surfaces.

No. 3226 Bench metallurgical microscope stand, integral illuminator and transformer, 6 v. 15 watt, with rheostat ...
No. 3632 Cabinet ... ...
No. 6161 Spare lamps 6 v. 15 watt ... ... each

Suitable objectives and eyepieces will be required to complete this instrument and should be selected from the range listed on page B—5.

Section B

METALLURGICAL MICROSCOPES AND ACCESSORIES

Metallurgical Microscope Accessories

For more details of the objectives, eyepieces and nosepieces listed here and for specifications of the further alternatives available, reference should be made to section E of the microscope catalogue.

Achromatic metallurgical objectives

The objectives in this series are specially manufactured to give optimum performance at 160 mm. tubelength on a specimen without cover glass. They are anti-reflection coated to enhance image brightness and contrast. All objectives are parfocal.

No. 5228 × 3.5/0.07 N.A. ... ...
No. 5229M × 5 /0.12 N.A. ... ...
No. 5231 × 10 /0.25 N.A. ... ...
No. 5232M × 10 /0.17 N.A. ... ...
No. 5233M × 20 /0.54 N.A. ... ...
No. 5235M × 45 /0.65 N.A. ... ...
No. 5238 × 90 /1.00 N.A. (oil immersion) ... ...
No. 5239 ×100 /1.30 N.A. (oil immersion) ... ...

Huygenian eyepieces

No. 3688 × 5 ... ...
No. 3260 × 6 ... ...
No. 3689 × 8 ... ...
No. 3261 ×10 ... ...
No. 3262 ×15 ... ...
No. 3097 ×20 ... ...

(N.B. Two eyepieces of each selected power will be required for all outfits based on the No. 3228B Binocular metallurgical microscope).

Microscope nosepieces

Revolving objective turrets are made to carry two, three or four objectives and dust caps are available to seal off any spare apertures. The nosepieces are accurately manufactured on special machines, in order that the parfocality and parcentricity of the objectives is maintained.

No. 3300 Double nosepiece ... ...
No. 3301 Triple nosepiece ... ...
No. 3302 Quadruple nosepiece ... ...
No. 3272 Dust cap ... ... each

The centring objective changers (illustrated in situ on page B—3) enable a series of objectives to be perfectly centred and are strongly advised for use with any rotating stage and for those applications where precise parcentricity of a number of objectives is desirable.

A hardened steel ring is permanently attached to the microscope nosepiece. Each objective is carried on a separate centring unit, which fits the nosepiece ring and is centred to the microscope axis by means of hardened steel screws actuated by removable hexagon keys. A spring loaded plunger ensures the location of the fitting.

No. 1820 Objective changer and keys ... ...
No. 1821 Centring fitting (one required for each objective) each
No. 1822 Case to contain four objectives on fittings, together with keys ... ...

Incident Light-Field Illuminator

The No. 1194 Incident light-field illuminator is illustrated attached to microscopes on pages B—1 and B—3. The principle of this illuminator, see adjacent diagram, provides for the precise control of the illumination of opaque objects. The unit is equipped with standard objective threads (A and D) which enable it to be fitted to the microscope and to accept either objectives or objective nosepieces.

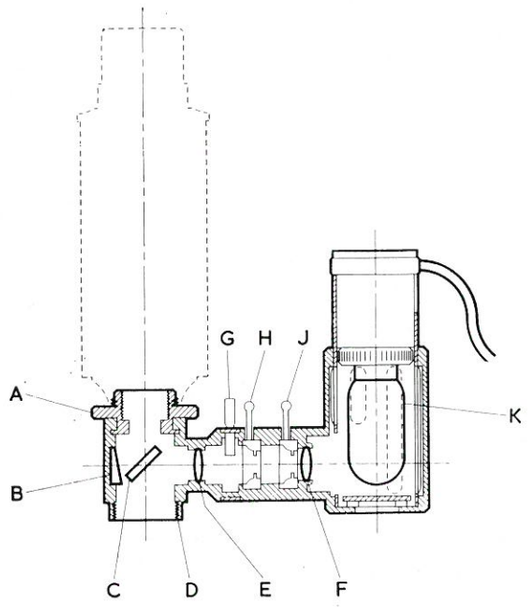

Light from the source (K) passes via the controlling optics (E and F) onto the partial reflector (C). A proportion of this light is reflected vertically through the objective onto the surface of the object, while the remaining portion traverses the partial reflector and is completely absorbed by the neutral glass wedge (B).

Light from the object passes through the partial reflector on its return and forms an image at the top of the microscope tube. The special glass of the reflector is surface treated for maximum efficiency, thus obviating double images arising from the two adjacent reflector surfaces.

Two iris diaphragms are mounted in the side tube, the diaphragm (J) nearer to the lamp condenser is imaged on the back of the microscope objective, while the diaphragm (H) is imaged on the object. The objective aperture and the illuminated field of view can, therefore, be precisely controlled to give optimum conditions for illumination.

The side tube also incorporates a filter slot (G) which will accommodate either colour or polarising filters if required.

No. 1194	Incident light-field illuminator	
No. 1197	Polarising filter for above	
No. 2160	Transformer 6 v. 15 watt with rheostat	
No. 6162	Spare lamps 6 v. 15 watt	each

Section B

METALLURGICAL MICROSCOPES AND ACCESSORIES

Incident Dark-Field Illuminator

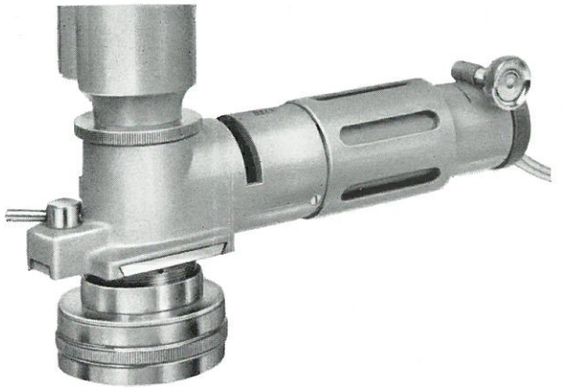

In the examination of a polished metal surface by light-field illumination the image will appear bright, any deformation or structure within the surface showing up as dark detail against this bright background. With dark-field illumination the reverse phenomenon occurs, the truly polished surface remaining dark while imperfections which scatter incident light are rendered as bright detail in the image. The illuminator is therefore particularly suitable for the examination of surfaces not having a high degree of polish. In metallurgical work such surfaces may be encountered in specimens which have been subjected to chemical or mechanical treatment, while non-metallic surfaces, such as paints, papers and other materials having low specular reflectivity, are particularly suitable for this technique.

The external appearance of the illuminator can be seen in the illustration. Light from the source is directed via a condenser system onto an annular 45° mirror which transfers the light to the mirrors surrounding the objectives, and concentrate the light onto the object. Light scattered by the object is picked up by the objective which then forms an image through the aperture in the annular mirror in the normal way.

The illuminator is adapted to the microscope by means of a standard objective thread, while the lower surface constitutes a dovetail slide into which the various special objectives, complete with their reflectors, are fitted.

No. 2340	Incident dark-field illuminator, in case	
No. 2341	Objective × 5/.12, N.A., with reflector	
No. 2342	Objective ×10/.25, N.A., with reflector	
No. 2343	Objective ×20/.54, N.A., with reflector	
No. 2344	Objective ×45/.65, N.A., with reflector	
No. 2160	Transformer 6 v. 15 watt, with rheostat	
No. 6161	Spare lamps 6 v. 15 watt	each

Incident Illuminators for use with separate light sources

The No. 4960 Incident illuminator can be interpolated between the microscope tube and the objective nosepiece of any microscope and houses a reflector system to direct the light from an external source vertically downwards through the microscope objective. It can be supplied with either a prism or a thin glass reflector, both of which are mounted with two adjustments to enable the illumination to be accurately aligned.



A further version, No. 4961, is available fitted with a polarising filter.

No. 4960 Incident illuminator with prism or thin glass reflector ...
No. 4961 Polarising Incident illuminator with prism reflector ...
No. 4960A Alternative thin glass or prism reflector for above ...

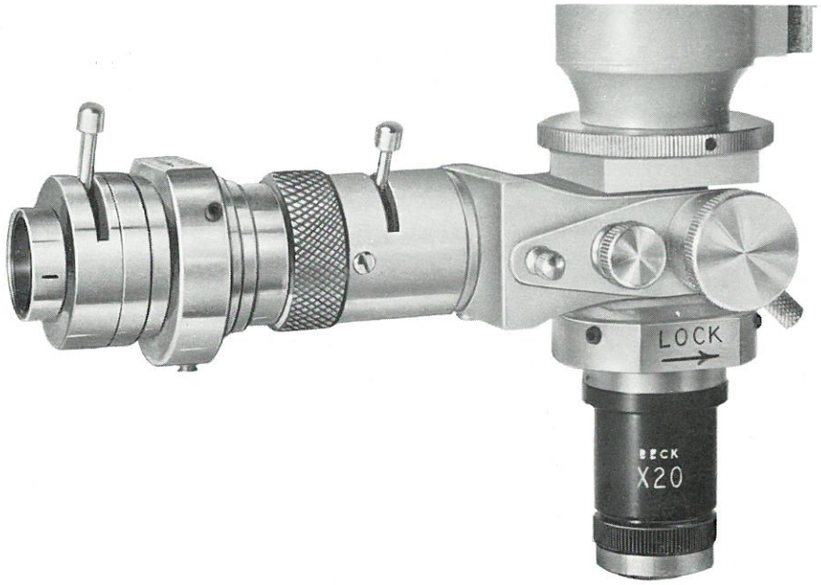

The No. 2013 Vertiphase illuminator is a versatile system for routine light-field illumination, phase contrast and polarised light techniques.

The full details of this illuminator are the subject of a separate publication which gives information on its use by each of the methods mentioned above. This pamphlet will be gladly sent on request.

No. 2013 Vertiphase illuminator for light-field incident illumination, with detachable iris diaphragm in centring fitting, thin-glass reflector and objective changer, in case ... ...
No. 2016 Spare thin-glass reflectors ... ... each

Accessories for specimen preparation

Levelling Device

This accessory provides a simple and positive method for ensuring that the metal surface being examined is exactly perpendicular to the optical axis of the microscope.

Pressure on the plunger renders the upper polished surface parallel with the undersurface of the microscope slide on which it is mounted with a plastic material such as plasticine.



No. 3805 Levelling device ... ...

Polishing Board

The wooden baseboard carries a plate of glass 9 in. × 9 in. upon which a sheet of emery paper is stretched and held down by the adjacent clamping strips. A polishing surface is thus provided, which enables a uniformly flat specimen to be produced. Grinding and polishing materials for this are listed below.

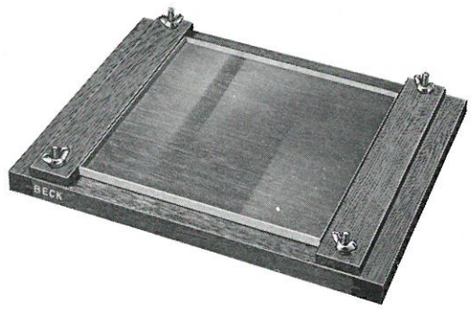

No. 3803 Polishing board, complete with glass plate ... ...

Grinding and Polishing Materials

No. 1311	Emery paper sheets, grades 1, 1/0, 2/0, 3/0, 4/0, 12 in. × 10 in.	per doz.
No. 1312	Selvyt polishing cloths, 10 in. × 10 in. ...	per doz.
No. 1313	Polishing rouge	per 250 gm.
No. 1314	Diamantine	per 4 oz.
No. 1315	Chromic oxide	per 4 oz.
No. 1316	Tripoli	per 500 gm.
No. 1317	Magnesium oxide	per 500 gm.
No. 1318	Emery powder, various grades	per 7 lb.
No. 1319	Carborundum, various grades	per 1 lb.

Automatic Grinding and Polishing Machine

The No. 1600 Automatic grinding and polishing machine is the subject of a separate publication describing the instrument in greater detail. This pamphlet will gladly be sent on request.

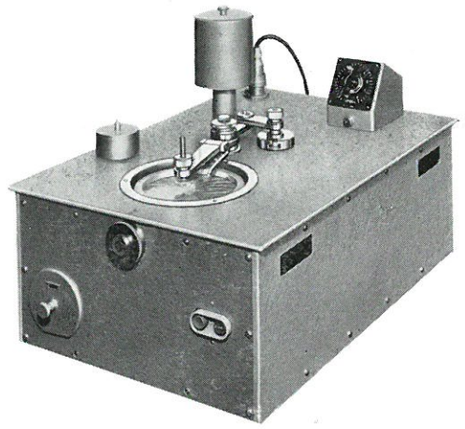

This equipment is capable of the rapid production of polished metal surfaces for subsequent treatment and examination by the microscope. Any operator with experience of preparing such specimens by hand will quickly be able to adapt his techniques to this machine.

A metal casing surrounds the fabricated frame which carries the main parts of the machine. The major part of the heavy gauge top plate constitutes a lid which can be opened by releasing the lock on the front of the machine, thus giving access to the internal parts.

The disc which carries alternatively the grinding or polishing lap is mounted on a vertical spindle towards the front of the machine and is rotated via a worm drive and pulley system from the $\frac{1}{4}$ h.p. motor located under the fixed portion of the top plate. The pulley drive can be adjusted manually to provide spindle speeds of 100, 200, 300 and 400 r.p.m. The motor also actuates the reciprocating specimen holder laterally across the lap surface at a constant rate of 30 cycles per minute.

The discs carrying the lap are $5\frac{1}{2}$ in. diameter and two forms are made. The grinding disc accepts abrasive papers or cloths of appropriate size and grade, which are held firmly in position by a peripheral clamp ring. The upper surface of the disc has grooves cut across it and the rim of the retaining ring rests above the level of the grinding surface by approximately $\frac{1}{8}$ in., so that the superfluous lubrication and slurry is easily cleared from the working area.

The polishing disc has a plain top surface and cloth laps are retained in contact with this by a flexible garter fitting into a groove cut in the periphery of the metal disc.

Three forms of specimen holder are available, the simplest being a single pin on the end of the specimen spindle which locates in a hole cast in the specimen blank. Where larger numbers of specimens are to be prepared, three specimen chucks for matrices of 1 in., $1\frac{1}{4}$ in. or $1\frac{3}{8}$ in. diameter enable identical polishes to be achieved on three similar specimens, which can then be independently etched. A fixed chuck for single specimens, which is coupled rigidly to the specimen pin, is also manufactured in the three sizes given above.

Automatic Grinding and Polishing Machine (continued)

The time of any particular operation can either be controlled manually or alternatively by means of the automatic timing device which can be introduced to switch off the electrical supply immediately a pre-set operation time has been completed. Many procedures require two or three minutes per operation and this time can be spent mounting or etching other specimens since the machine requires no attention during a working cycle.

On the fixed portion of the top plate there is a reservoir for lubricating fluid which is fed to the work through a tube mounted on the centre pivot of the reciprocating specimen bracket. The tube is adjustable for position relative to the working area and the rate of flow of lubricant is controlled by a tap on the top of the pivot spindle. An anti-splash ring surrounds the dish and lubricant thrown off the rotating lap is caught and drains away into the catcher bowl. Liquid from the catcher bowl drains off to a lower reservoir via a pipe with an automatic tap. The lower reservoir is readily removable to allow cyclic use of the lubricant.

When the lid is raised the electrical circuit is automatically broken and the lubricant flow ceases, safety measures—the value of which will be readily appreciated.

While compact enough to be used on a bench, the external dimensions being 22 in. × 15 in. × 8 in., the machine is robust and capable of the rapid and repetitive production of a large number of polished metallurgical specimens. All bearings are self-lubricating, the worm gear mechanisms are grease packed and sealed and all flexible parts are made from corrosion resistant materials, so that a very long period of use without any maintenance can be confidently expected.

No. 1600	Automatic grinding and polishing machine with motor, one polishing disc, one grinding disc and single pin-type specimen holder ... ...
No. 1602	Automatic timing device ... ... extra
No. 1603A	Single fixed chuck for specimens in 1 in. diam. matrices
No. 1603B	Single fixed chuck for specimens in $1\frac{1}{4}$ in. diam. matrices
No. 1603C	Single fixed chuck for specimens in $1\frac{3}{8}$ in. diam. matrices
No. 1604A	Multiple fixed chuck for 3 specimens in 1 in. diam. matrices ... ...
No. 1604B	Multiple fixed chuck for 3 specimens in $1\frac{1}{4}$ in. diam. matrices ... ...
No. 1604C	Multiple fixed chuck for 3 specimens in $1\frac{3}{8}$ in. diam. matrices ... ...
No. 1605	Spare grinding disc with retaining ring ... ... each
No. 1606A	Spare polishing disc in aluminium ... ... each
No. 1606B	Spare polishing disc in brass ... ... each
No. 1610	Table for grinding and polishing machine ... ...

As listed, the machine is supplied complete with a motor for 230 volt a.c. 50 cycle, single-phase main supply. Quotations for other supplies will be furnished upon receipt of particulars.

Hand Grinding and Polishing Machine

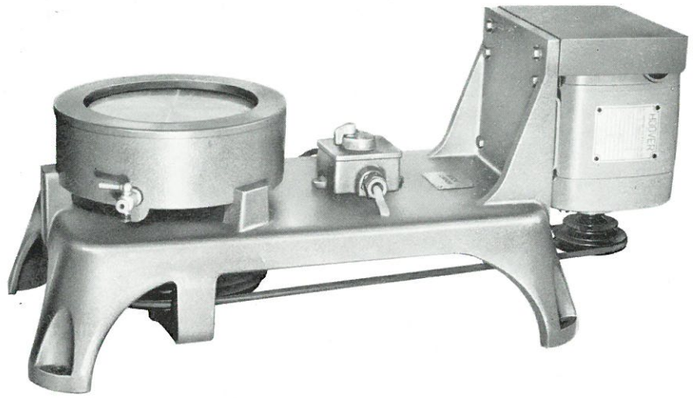

The Hand grinding and polishing machine is a simple, yet convenient apparatus, for the production of polished metallurgical specimens by hand. It does not have the automatic control features found on the No. 1600 machine described in the previous pages, but nevertheless is highly convenient and efficient.

The vertical spindle, carrying a 6½ in. diameter grinding and polishing lap, has a triple pulley fixed to its lower end and power is provided by the electric motor of 1/6 h.p. rating. Adjustment of the belt drive provides spindle speeds of approximately 225, 425 and 625 r.p.m.

The lap is fitted to the spindle by means of a taper which allows for its easy removal. The emery paper for grinding, or the cloth for polishing, are secured to the disc by a garter which fits in a groove in the edge of the disc. The catcher ring which surrounds the working area serves as an anti-splash ring, a hand-rest and as a means of preventing the specimen from dropping into the catcher bowl, should it slip from the fingers.

A drip-can, mounted on a pillar near the edge of the catcher bowl, can be supplied to enable a controlled and regular flow of lubricant to be provided at the working area. Excess lubricant and slurry is cleared centrifugally from the lap surface and drops into the catcher bowl, from which it can be drained by means of a tap. All parts nearest to the working surface are readily removable from the machine for cleaning.

No. 1290M	Hand grinding and polishing machine with motor, one polishing disc, cover, catcher, disc lifters, drainage tap, tin of grease and 12 ft. cable	
No. 1291	Drip can fitted to 1290M	extra
No. 1292	Extra polishing discs in brass	each
No. 1293	Extra polishing discs in aluminium	each
No. 1296	Emery paper discs, 9 in. diam.	per doz.
No. 1297	Broadcloth discs, 9 in. diam.	per doz.

As listed, the machine is supplied complete with a motor for 230 volts a.c. 50 cycle, single-phase main supply. Quotations for other supplies will be furnished upon receipt of particulars.

Section B

METALLURGICAL MICROSCOPES AND ACCESSORIES

BUSINESS TERMS

1. All prices are strictly nett for cash.
2. Payment should be made by cash with order where no account has been opened in our ledgers. Where it is desired that a ledger account be opened, London reference should accompany order to prevent delay.
3. All goods and experimental models made to order must be paid for half in advance and half on delivery. We take no responsibility for the performance of experimental models.
4. Prices are subject to alteration on account of fluctuation in cost of labour and materials.
5. A charge is made for packing cases, which, when returned empty, carriage paid and in good condition, will be credited at invoiced price.
6. Delivery is free in the London district. Elsewhere in the United Kingdom, goods are sent carriage paid and the cost of carriage charged on the invoice, except in cases where delivery is included in the contract price.
7. We do not hold ourselves in any way responsible for damage to goods in transit, although every care is expended in the packing. Our risk terminates on the goods leaving our warehouse. We can insure goods at customer's expense if instructed to do so.
8. We cannot consider complaints as to the execution of any order unless lodged within seven days of the receipt of the goods.
9. Code. In cabling or telegraphing orders it is only necessary to quote catalogue number.

As constant improvements are incorporated in our instruments the illustrations and descriptions in this catalogue may not be up to date in every detail.

Regular servicing maintains the efficiency and prolongs the life of an instrument.
We shall be pleased to furnish details of our servicing facilities.

This catalogue cancels previous lists

Pubn. No. C.278 12.62

F. & F. Ltd.