WATSON

MICROSYSTEM 70

ILLUSTRATED GUIDE

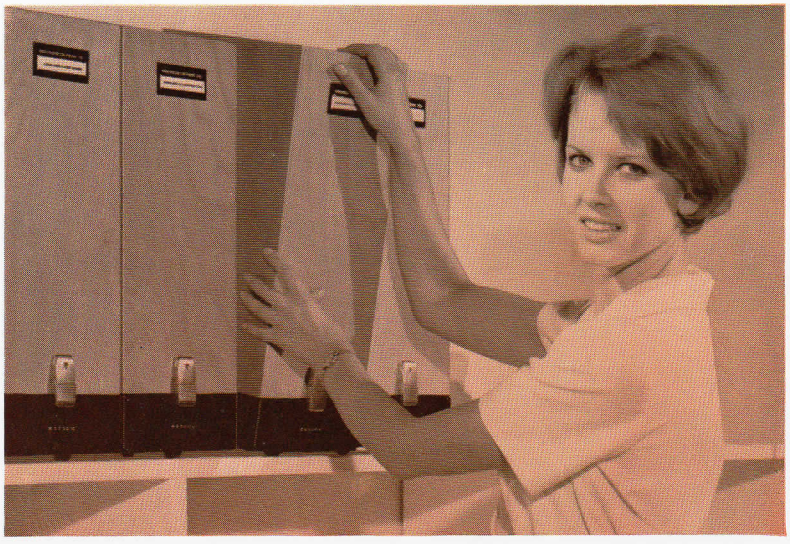

THE FITTED CASE COVER provides a convenient means of storing and carrying the microscope. Faced with elegant polished beech, the sides are plain and the handle is recessed for easy stacking. The slim lines make minimum demands on storage space.

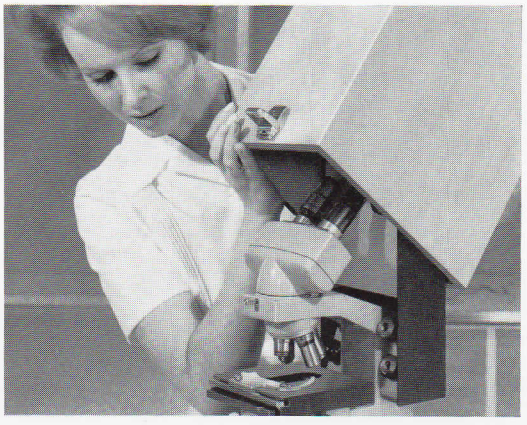

The case locks on to any of the five illuminating bases, making a dust-proof seal. It clears the accessory tray and box, and avoids the need for separate extras.



THE HANDRESTS support the hands for operating the principal controls. Black nylon coated, they can be detached, or folded up for case fitting.



THE KOHLER ILLUMINATING BASE is operated from a light control unit which can be housed in the accessory tray or used free-standing. The tray will hold four eyepieces or, in place of the control unit, the accessory box which provides storage for objectives and small accessories.



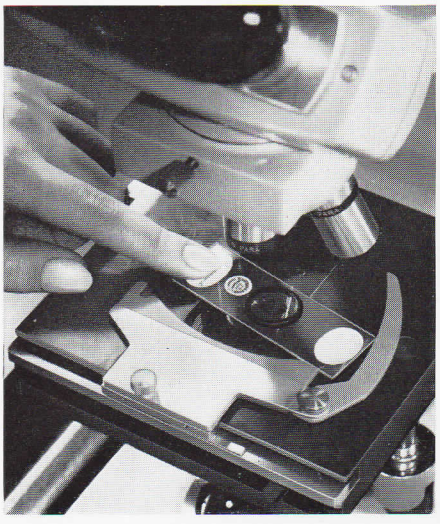

THE SLIDE HOLDER on the flat top mechanical stage is designed for easy loading. The holder will accept slides up to 3in long and from 1in to 2in wide. It can be removed when not required.



INTEROCULAR ADJUSTMENT is effected by means of a very smooth sliding mechanism fully sealed against the entry of dust. Eye separation is clearly marked in millimetres.



HEADS CAN BE INTERCHANGED quickly, and are accurately centred to a common standard. The inclined heads can be rotated through 360° without slackening the clamp screw.

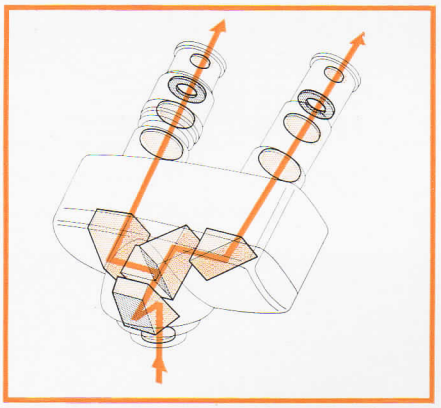

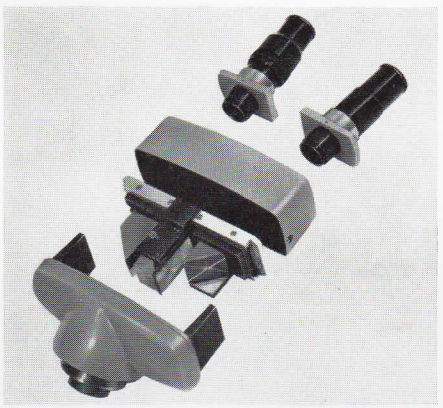

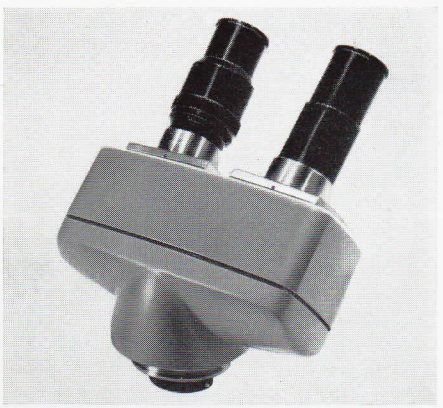

ONE OF THE PRINCIPAL DESIGN FEATURES of the inclined binocular head is the 5° included angle convergence of the eyepiece tubes. Convergence enables an inexperienced microscopist to fuse the images instantly and without difficulty. Special windows below the eyepieces protect the prisms from dust and the latest techniques in anti-reflection coating are used on the glass surfaces to reduce glare. The head rotates through 360° on a smooth bearing that preserves accurate centring; it has a magnification factor of 1.5.

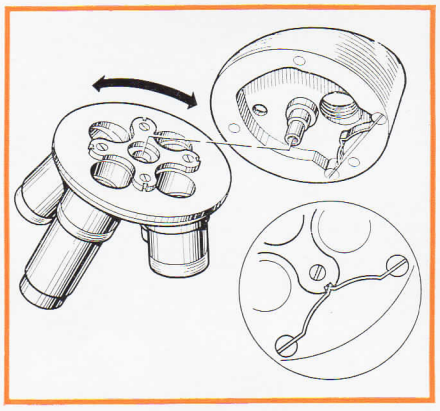

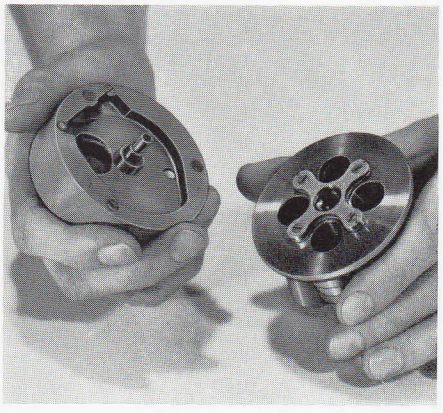

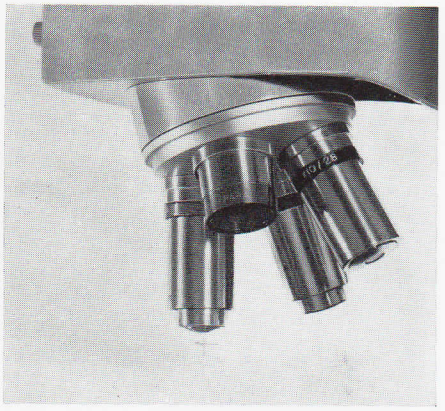

THE OBJECTIVE TURRET rotates on peripheral low friction bearing pads which are loaded by a central coil spring. All wear is automatically taken up, and a very high standard of centring and parfocality is achieved by cutting the objective screw threads on each nosepiece after assembly. An entirely new indexing device has been designed for the turret, and the mechanism has been intensively life-tested.

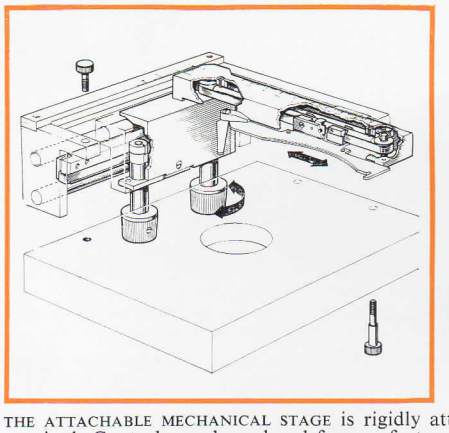

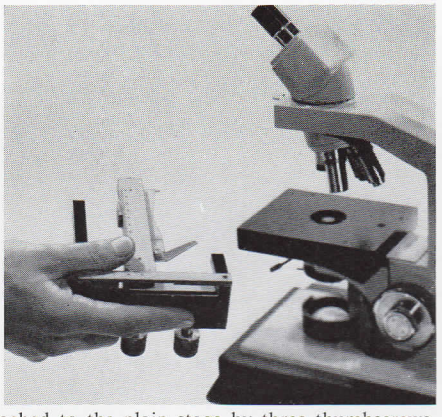

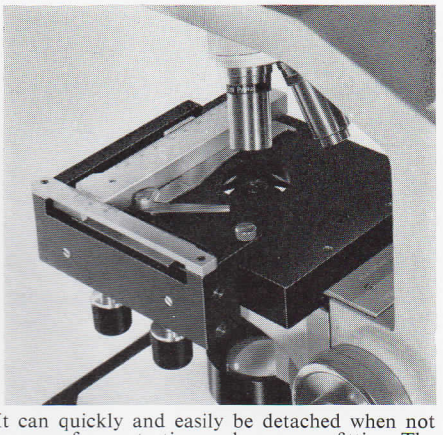

THE ATTACHABLE MECHANICAL STAGE is rigidly attached to the plain stage by three thumbscrews. It can quickly and easily be detached when not required. Controls are low-placed for comfort and are contained within the base limits of the microscope for protection and easy case fitting. The operating mechanism is based on flexible stainless steel tapes, spring-loaded to give smooth loss-free movements and an extremely long life. A special quick-loading slide clip is provided.

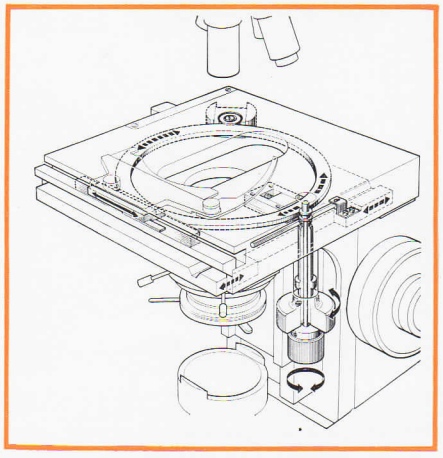

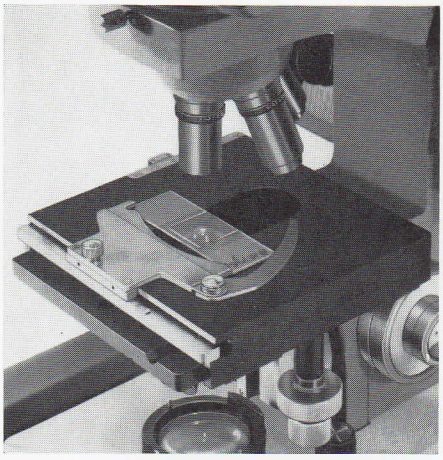

THE BUILT-IN MECHANICAL STAGE is a flat top stage of strikingly original design based on true kinematic movements which are entirely self-compensating for wear. The top (moving) plate rests on a kinematic bearing to which mechanical load is applied by small magnets. The drive in both x and y planes is by spring-loaded friction mechanism. The co-axial controls are low-placed, and the quick-loading slide holder, designed for one-handed action, can be easily removed to provide a large flat surface for extended objects.

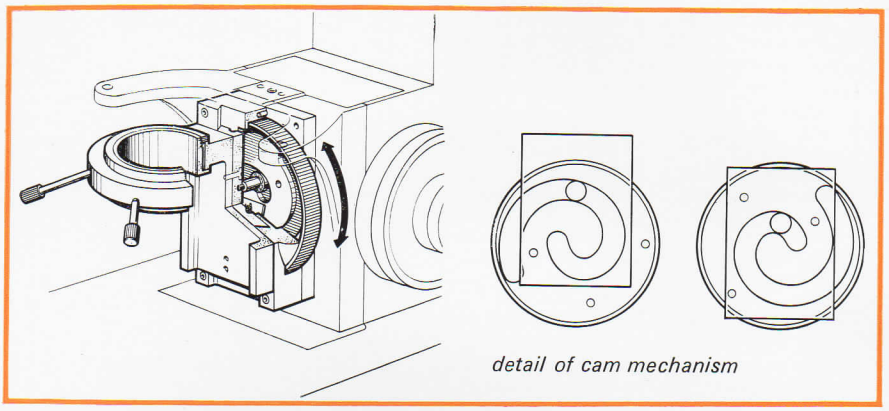

detail of cam mechanism

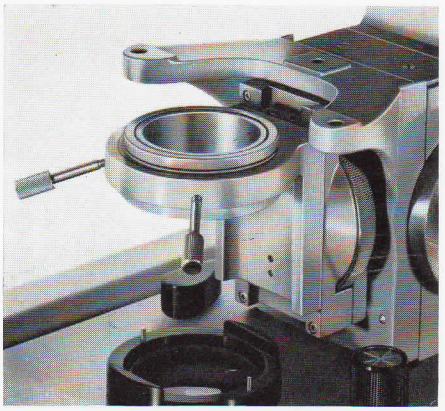

THE SUBSTAGE provides focusing and centring adjustments for the condenser, and is standard equipment on all Microsystem 70 instruments. Focusing is by smooth, precise cam operated by a large knurled ring conveniently placed for the thumbs when the fingers are on the microscope focusing controls. Easily adjusted thumbscrews provide condenser centring. The juxtaposition of substage control and microscope focusing controls is an outstanding example of ergonomic principles applied to microscope design.

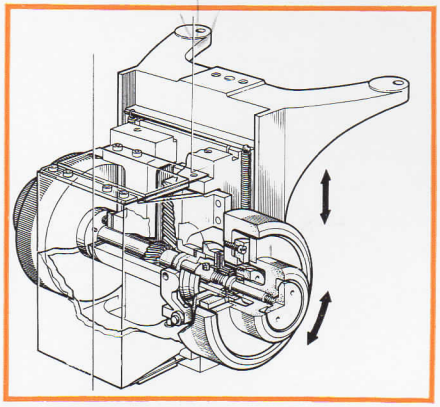

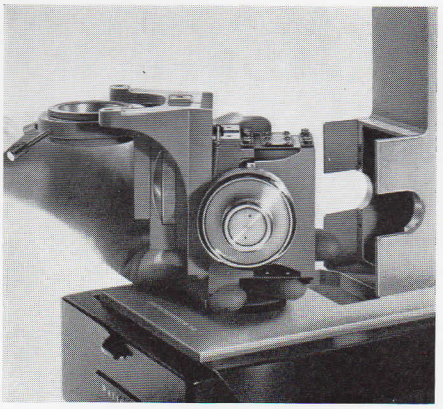

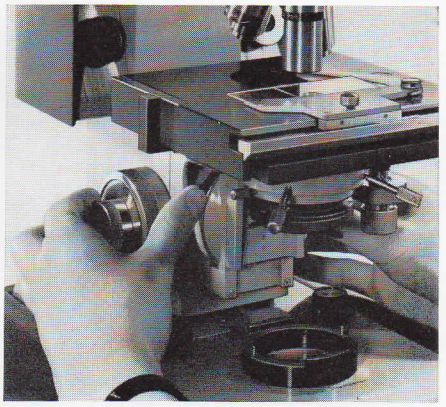

COARSE AND FINE FOCUSING CONTROLS (stage focusing) are co-axially placed conveniently low on both sides of the microscope and the entire focusing assembly can be withdrawn after the removal of four socket screws. The coarse adjustment is based on a wide, correctly proportioned dovetail slide, and tension can be adjusted to the user's preference. Fine focus is achieved by a twin beryllium copper spring parallelogram with no sliding parts, giving a rigid hysteresis-free movement.

ILLUMINATING BASES

There are five illuminating bases available for use with Microsystem 70 microscopes. A sixth base—with 12v 100w quartz-iodine light source—is fitted as standard to the Hilux 70, an advanced microscope in the Microsystem 70 range. The five bases are:

Köhler illuminating base; low-voltage illuminating base; low-voltage illuminating base with light intensifier; mains voltage illuminating base; mirror base.

Köhler illuminating base

A well-corrected optical system provides powerful Köhler illumination accurately adjusted to the optical axis and protected from accidental misalignment. A controlled and even illumination is provided for a binocular system and all objectives from × 3/.11 to × 100/1.3 with adequate intensity for techniques such as dark ground, phase contrast, photomicrography, etc.

A simple control introduces an auxiliary lens to change from low to high magnification range without tedious re-adjustments to condenser or other optical elements. The field iris remains focused in both ranges.

The 6v 30w lamp has a specially designed filament and is supplied fitted with a prefocus flange. An accurately centred lampholder withdraws from the rear of the base for easy precise lamp replacement. A separate control unit provides continuously variable intensity and includes a voltmeter. Information relating lamp voltage to expected life and colour temperature is supplied in the instruction manual. For convenience the control unit can stand freely on the bench, be wall-mounted or located in the accessory tray on the microscope stand—in which position it clears the case.

The diagrams show the ray paths through the lens system in the high and low power conditions, and the arrangement of the lens system, the pre-focus lampholder and the field iris control.

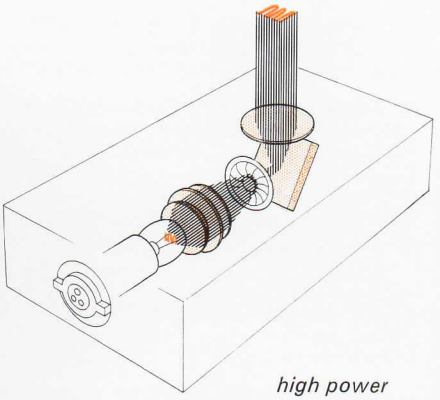

high power

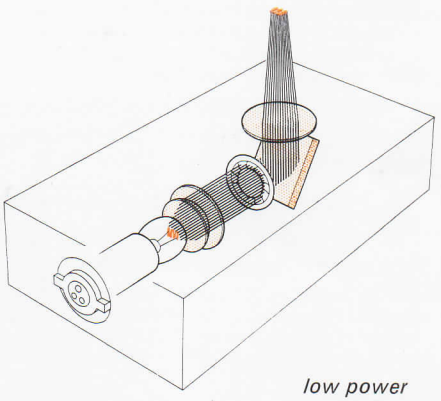

low power

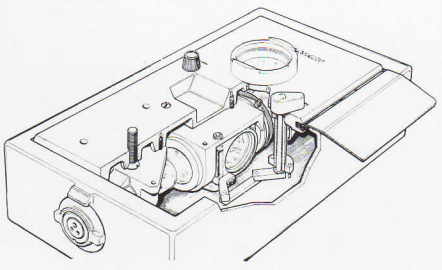

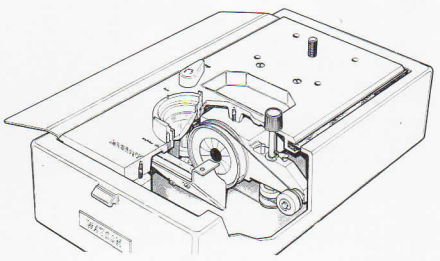

Low-voltage illuminating base

A simple illuminating system with a diffuse source and a self-contained electrical control unit to provide variable intensity. The base gives even bright field illumination with all powers of objectives.

Low-voltage illuminating base with light intensifier

A touch on the control switch swings the specially developed light intensifier into position, transforming the low-voltage illuminating base into a source of illumination sufficiently intense for phase contrast work with 2mm oil-immersion objective and binocular head.

Mains voltage illuminating base

The base provides an inexpensive built-in illuminator using a mains voltage bulb behind a diffusing lens. It is intended to give illumination for the monocular microscopes at all magnifications and for the binocular microscopes with dry objectives. Intensity can be reduced with filters for work requiring low magnifications.

Mirror illumination base

Intended for use with an external light source, this simple base is fitted with a 50mm diameter plane mirror in a gymbal mount.

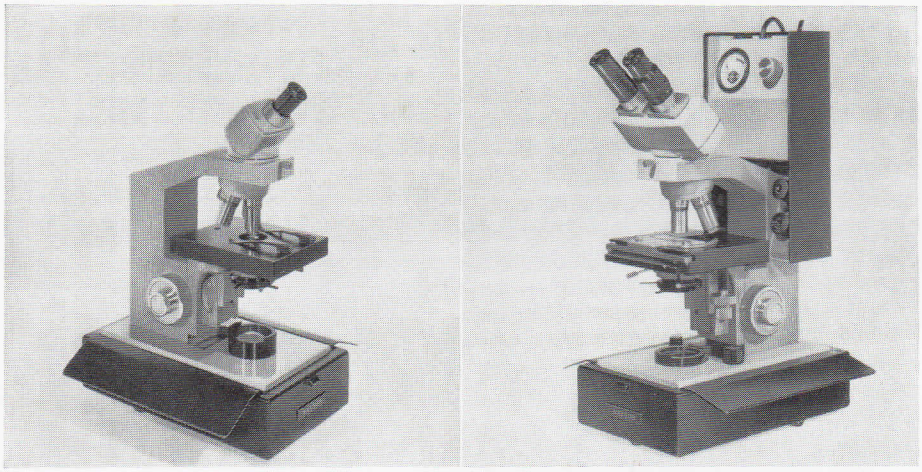

Microsystem 70 fitted with inclined rotating monocular head, plain stage and mains voltage illuminating base (*left*).

Microsystem 70 fitted with inclined rotating binocular head, built-in mechanical stage, Köhler illuminating base, accessory tray and light control unit (*right*).

Advanced design techniques are combined in Microsystem 70 with engineering skills of the highest order to guarantee lasting trouble-free service. Performance and reliability are ensured by thorough life-testing in the design stages and rigorous inspection in production.

After-sales user instruction is freely available.

An efficient service department with locally based engineers throughout the UK can provide:

- One free service at any time up to eighteen months after delivery.
- Servicing by competent engineers as required.
- Regular service contracts at special rates.

In many countries overseas, Watson agents employ factory-trained staff and can offer a fully comprehensive maintenance service. Details will be provided on request.

Watson is a member of the Pye Group of Companies

Other Microsystem 70 publications

Microsystem 70 list of parts and prices
Every component part in the Microsystem 70 range of microscopes is listed with prices.

Optical components for Microsystem 70
Objectives, eyepieces and condensers are fully described and tabulated; there is a discussion on Watson objective types with notes on the choice of objectives for specific purposes.

Microsystem 70 suggested outfits
Outfits range from a student monocular microscope with built-in illumination to advanced research microscopes with accessories and equipment of the highest order. The list does not set out to be exhaustive; rather is it a general indication of the lines along which an outfit should be made up to satisfy individual requirements. The outfits listed, however, will be found to be entirely adequate for the needs of many users.

Microsystem 70
A detailed and illustrated survey of the entire system and its individual components.

Microsystem 70 : Hilux 70
A four-page publication illustrating and describing the Hilux 70—an advanced microscope in the Microsystem 70 range. The Hilux 70 has a 12v 100w quartz-iodine light source.

Phase contrast equipment for Microsystem 70
Notes on the principles of phase contrast microscopy, together with special mention of negative phase and a detailed description of the equipment available for both positive and negative phase contrast with Microsystem 70 and Hilux 70 microscopes.

Photographic equipment for Microsystem 70
Eight pages devoted to photomicrography with Microsystem 70 and Hilux 70. Cameras ranging from manual 35mm and Polaroid Land, through semi-automatic 35mm and Polaroid Land, to fully and completely automatic 35mm. Plus the remarkable Watson light distributor unit.

W WATSON & SONS LTD BARNET HERTS ENGLAND

TELEPHONE: 01-449 4404
TELEGRAMS: 'OPTICS' BARNET

MSIG : 268

Printed by Printonia Ltd London England